Flagler County Board of County Commissioners
Regular Meeting Agenda

October 5, 2026 • 9:00 AM

Government Services Building 2, Board Chambers,1769 E. Moody Blvd., Bunnell, FL 32110

View the meeting streamed live on the County's YouTube Channel.

1. Pledge to the Flag and Moment of Silence

2. Additions, Deletions and Modifications to the Agenda

2.a. 10/2/2026 -- Amended Consent Agenda Item 7.f. to replace unsigned contract with signed contract; amended Consent Agenda Item 7.g. to correct staff report reference to Schedules A and E and to clarify funding for the project (including increased local match from $10,780 to $21,279.28, inclusive of a $10,499.28 scaffolding adjustment); amended Consent Agenda Item 7.h. to correct staff report error in $5,000.00 amount for miscellaneous services; and amended Public Hearing Agenda Item 9.a. to add public comments received following initial agenda publication.

3. Announcements by the Chair

4. Recognitions, Proclamations and Presentations

4.a. Recognitions

4.b. Proclamations

1) Proclamation recognizing October 2026 as Arts & Humanities Month

2) Proclamation recognizing October 2026 as Domestic Violence Awareness Month

3) Proclamation recognizing October 4 - 10, 2026 as Fire Prevention Week

4) Proclamation recognizing October 14, 2026 as Charlie Kirk Day of Remembrance

4.c. Presentations (3-5 Minutes)

5. Community and Board Comments

5.a. **Community Outreach:** This thirty-minute time period has been allocated for public comment on any consent agenda item or topic not on the agenda. Each speaker will be allowed up to 3 minutes to address the Commission. Speakers should approach the podium, identify themselves and direct comments to the Chair.

5.b. Board Comments on Consent Items

6. Consent: Constitutional Officers

6.a. **Clerk: Bills and Related Reports:** For the Board's consideration: report(s) of funds withdrawn from County depositories by the Flagler County Clerk of the Circuit Court and the Revenue Collected Report presented in compliance with the provisions of Section

136.06, Florida Statute.
See attachments:
Revenue Collected Report for Month of July 2026
Revenue Collected Report for Month of August 2026
Disbursement Report for Week Ending September 4, 2026
Disbursement Report for Week Ending September 11, 2026

6.b. **Clerk: Approval of Board Meeting Minutes:** Request the Board approve the minutes from the following Meetings:
See attachments:
August 10, 2026 BOCC Workshop
August 10, 2026 BOCC Special Meeting
August 17, 2026 BOCC Workshop
August 17, 2026 BOCC Regular Meeting
Seotember 2, 2026 BOCC Regular Meeting
September 3, 2026 BOCC Special Meeting

7. Consent: BOCC Departments

7.a. **Ratification and Approval of Proclamations Extending the Local State of Emergency Due to Severe Coastal Erosion and Vulnerability**.

Staff recommends that the Board ratify the Proclamations Extending the Local State of Emergency for Hurricanes Matthew, Ian and Nicole.

7.b. **Approval of HHS - Human Services Grant Agreement with SMA Healthcare Inc.** Staff recommends that the Board approve the FY 2026-27 Grant Agreement between Flagler County and SMA Healthcare, Inc. in the amount of $170,000.00 to support substance abuse and mental health treatment services.

7.c. **Approval of Repayment Time Beyond One Year for Outstanding Inter-Fund Loans from Fiscal Year 2025-26.**

Staff recommends that the Board approve repayment time beyond one year for outstanding inter-fund loans from Fiscal Year 2025-26.

7.d. **Approval of the Re-Appointment of Mr. Robert Boggess II to the Emergency Medical Services Advisory Board (EMSAB).**

Staff recommends that the Board approve the re-appointment of Mr. Robert Boggess II to the Emergency Medical Services Advisory Board for a two-year term, from October 5, 2026 to October 5, 2028.

7.e. **Approval of the Re-Appointment of Ms. Jeanne Nix to the Library Board of Trustees (LBOT).**

Staff recommends that the Board approve the re-appointment of Ms. Jeanne Nix to the Library Board of Trustees, for a three-year term from September 6, 2026, to September 6, 2029.

7.f. **Approval to Piggyback the Pinellas County Agreement #26-0488-RFP: On-Line Auction Services for Miscellaneous Surplus with Liquidity Services Operations LLC d/b/a GovDeals, Inc.**

Staff recommends that the Board approve the piggyback of Pinellas County Board of County Commissioners Agreement per Request for Proposal (RFP) 26-0488-RFP for On-

Line Auction Services for Miscellaneous Surplus with GovDeals, Inc. and authorize the Chair to execute the Flagler County Cooperative Agreement #26-PB-024 as approved as to form by the County Attorney and approved by the Interim County Administrator.

7.g. **Approval of Bid Award 26-ITB-018 to Saboungi Construction, Inc. for the Air Traffic Control Tower Rehabilitation at the Flagler Executive Airport in the amount of $409,970.**

Staff recommends that the Board approve Bid Award 26-ITB-018 to Saboungi Construction, Inc. for the Air Traffic Control Tower Rehabilitation at the Flagler Executive Airport in the amount of $409,970, authorize the Chair to execute the contract as approved as to form by the County Attorney.

7.h. **Approval of Award and Execution of Contract 26-ITB-020 - Pest Control Services to Massey Services.**

Staff recommends that the Board approve the bid award to Massey Services, Inc. for Pest Control Services under Invitation to Bid #26-ITB-020 in the annual amount of $43,893.00, plus an additional $5,000.00 for miscellaneous services as requested by the County. Authorize the Chair to execute a contract approved as to form by the County Attorney, and authorize the Interim County Administrator to execute any change orders or related documents.

7.i. **Approval of the Twenty-third Amendment to the Professional Services Agreement 14-032Q between Flagler County and Foth Infrastructure and Environment, LLC, for Coastal Engineering Services for Permit Modification to Support the Use of an Offshore Sand Source for Future Hammock Dunes Owners Association Dune Restoration Projects.**

Staff recommends that the Board approve the Twenty-third Amendment to Professional Services Agreement 14-032Q with Foth Infrastructure and Environment, LLC, for $148,984.00.

8. General Business

Presentations limited to 15 minutes with public comments limited to 3 minutes per speaker.

8.a. **Consideration of Approval of Awarding Request for Proposals (RFP) Response from Therapeutic Assisted Living and Carry Out Operational Transition of the David I. Siegel Adult Day Care Center.**

Staff recommends that the Board review the response from the highest-ranking bidder and take one of two possible actions:
1. The highest-ranking bidder of the ADC RFP - Therapeutic Assisted Living - is presented for board consideration to take over program, administration and operational oversight of the David I Siegel Adult Day Care Center, to include completing a CHOW and subsequent transfers of related licensing, MLTC contracts and remaining participating patients. Board approval shall authorize the County Administrator to execute the pertinent 26-RFP-02 vendor agreement. Approval shall also authorize the County Administrator to execute CHOW and all necessary documents associated with accepting and implementing said contract, including any amendments, approved as to form by the County Attorney.
2. Reject all bids and move forward with closing the Adult Day Care Center, providing required notice to funding and licensing agencies and extending operations until required minimum closure notice timeframes have been met.

8.b. **Consideration of Approval of Amended Interlocal Agreement Regarding Cold**

Weather Shelter Services and County Site Location Use.

Staff recommends that the Board approve the amended Interlocal Agreement among Flagler County, the City of Bunnell, the City of Flagler Beach, and the City of Palm Coast regarding the provision of Cold Weather Shelter services. Additionally, staff recommends approving the contracted vendor's use of the Expo Hall for CWS activated nights, to be memorialized via a Facility Use or similar agreement, approved as to form by the County Attorney's Office.

9. Public Hearings

Public Hearings will be heard after 9:30 a.m.

Quasi-Judicial Process: The audience should refrain from clapping, booing or shouts of approval or disagreement. To avoid potential legal ramification and possible overturning of a decision by the Courts, a public hearing must be fair in three respects: form, substance and appearance.

Time limits will be observed:
- Staff – 10-minute presentation.
- Applicant – 15-minute presentation (unless time extended by consensus of Board).
- Public Comment – 3 minutes per speaker, 5 minutes if speaking on behalf of a group.
- Applicant Rebuttal and Closing Staff Comments – 10 minutes each.

9.a. **QUASI-JUDICIAL – Project No. 2025080063 – Request for an Appeal of the Planning and Development Board's Decision Denying a Variance from the Minimum Required Streetside (West) Setback and Maximum Lot Coverage Requirement for a Pump House in the R/C (Residential/Limited Commercial) District at 3 Pelican Lane.** Parcel Number: 23-11-31-5300-00000-0130; 7,500+/- square feet (0.17+/- acres). Owners: Raymond R. Royer, Jr., and Janice L. Paxson/Applicant: Raymond R. Royer, Jr. (AR No. 6743).

OPTIONS FOR THE BOARD: As a reminder, the Board of County Commissioners is sitting in an appellate capacity as it relates to this matter. It is limited by LDC Section 3.07.03.C. to determining whether:

1. The Planning and Development Board's decision was supported by competent, substantial evidence;
2. Whether due process was accorded; and
3. Whether the essential requirements of the law have been observed.

The Board of County Commissioners may take ONE of the following actions:

1. APPROVE the Appeal request, overturning the Planning and Development Board's denial of the Variances for the Pool, Pool Deck, and Pump House in the R/C (Residential/Limited Commercial Use) District at 3 Pelican Lane. With this course of action, the Board of County Commissioners will be **OVERTURNING** the decision of the Planning and Development Board's denial of the new variance requests and thus the condition to limit the height of the proposed Pump House to four (4) feet. The Board of County Commissioners will need to set the maximum height of the Pump House; otherwise, the maximum height will be limited to a maximum height of twelve (12) feet.

2. DENY the Appeal request, upholding the Planning and Development Board's denial of the Variance – and thus the condition to limit the height of the proposed Pump House to four (4) feet at 3 Pelican Lane. With this course of action, the Board of County Commissioners will be **AFFIRMING** the Planning and Development Board's decision to

grant the Variance *with the condition as to the Pump House as originally imposed by the Planning and Development Board.*

3. REMAND the Variance denial back to the Planning and Development Board for further proceedings with direction on how the Planning and Development Board failed to base its decision on competent substantial evidence, accord due process, and/or observe the essential requirements of law. The Variance use is held in abeyance until the Planning and Development Board renders a decision on the Variance as remanded.

4. CONTINUE the Board of County Commissioners' review of the appeals to a time and date certain. A continuance should be for the appellants or for staff to provide additional information to the Board of County Commissioners.

10. Additional Reports and Comments

10.a. County Administrator Report/Comments

10.b. County Attorney Report/Comments

10.c. **Community Outreach:** This thirty-minute time period has been allocated for public comment on any consent agenda item or topic not on the agenda. Each speaker will be allowed up to 3 minutes to address the Commission. Speakers should approach the podium, identify themselves and direct comments to the Chair.

10.d. Commission Reports, Comments, and Actions

11. Adjournment

Section 286.0105, Florida Statutes states that if a person decides to appeal any decision made by a board agency, or commission with respect to any matter considered at a meeting or hearing, he or she will need a record of the proceedings, and that, for such purpose, he may need to ensure that a verbatim record of the proceedings is made, which record includes the testimony and evidence upon which the appeal is to be based.

In accordance with the Americans with Disabilities Act, persons needing assistance to participate in this meeting should contact the (386) 313-4001 at least 48 hours prior to the meeting.

A PROCLAMATION OF THE
FLAGLER COUNTY BOARD OF COUNTY COMMISSIONERS
RECOGNIZING THE MONTH OF OCTOBER 2026 AS
ARTS AND HUMANITIES MONTH

WHEREAS, on October 17, 2022, the Flagler County Cultural Council, Inc., was officially designated by the Board of County Commissioners as the Local Arts Agency for Flagler County; and

WHEREAS, the efforts of the Flagler County Cultural Council align with Flagler County's strategic plan to preserve, protect, promote, and enhance the community's arts, culture, and history offerings; and

WHEREAS, the Flagler County Cultural Council believes that Flagler County possesses a rich history, a wealth of cultural traditions, and an abundance of the arts, which together inspire creativity, preserve our shared heritage, and foster learning and cultural understanding, to ultimately strengthen Flagler County's quality of life for residents and visitors alike; and

WHEREAS, October is recognized as National Arts & Humanities Month (NAHM), an annual celebration that grew out of National Arts Week, launched in 1985, and which expanded to a full month-long observance in 1993; and

WHEREAS, the National Endowment for the Arts and Americans for the Arts first launched the initiative with the goals of:

- Focusing on equitable access to the arts at national, state, and local levels;
- Encouraging individuals, organizations, and diverse communities to participate in the arts;
- Allowing governments and businesses to show their support of the arts; and

WHEREAS, NAHM has now become the largest annual celebration of the arts and humanities in our nation, when people across the United States join to recognize the positive impact of arts and culture on our communities and lives; and

WHEREAS, the Flagler County Cultural Council executes the desires of the community through the pillars of Advocacy, Collaboration, and Support in partnership with local, state and national agencies.

NOW THEREFORE, BE IT PROCLAIMED BY THE FLAGLER COUNTY BOARD OF COUNTY COMMISSIONERS that **October 2026** is recognized as **"Arts and Humanities Month"** in Flagler County and urges citizens to explore the many ways Arts, Humanities, and History enrich our lives, and deepen our community identity.

Adopted this 5th day of October 2026.

ATTEST:

FLAGLER COUNTY BOARD OF
COUNTY COMMISSIONERS

_____
Tom Bexley, Clerk of the
Circuit Court and Comptroller

_____
Leanne Pennington
Chair

A PROCLAMATION OF THE
FLAGLER COUNTY BOARD OF COUNTY COMMISSIONERS
RECOGNIZING THE MONTH OF OCTOBER 2026 AS
DOMESTIC VIOLENCE AWARENESS MONTH

WHEREAS, home should be a place of warmth, unconditional love, tranquility, and security, and for most of us, home and family can indeed be counted among our greatest blessings. Tragically, for many Americans, their home is tarnished by violence and fear; and

WHEREAS, family violence is a crime that transcends race, religion, ethnicity and economic stature with one of its greatest tragedies being its effect on our children; and

WHEREAS, an estimated 4.8 million cases of domestic violence occur nationally each year, tragically killing an average of three women every day; and

WHEREAS, the Family Life Center, the only certified domestic violence emergency shelter and rape crisis center in Flagler County, provided over 5,800 hours of services to victims in the past year; and

WHEREAS, Family Life Center, the Flagler County Advocates Alliance and the Flagler County Domestic Violence Task Force membership are committed to confront this crisis and are working together to increase public understanding of this problem and mobilize community efforts to end domestic violence in Flagler County; and

WHEREAS, Domestic Violence Awareness Month (DVAM) evolved from the Day of Unity held in October 1981, and Congress subsequently designated October as DVAM in 1989; and

WHEREAS, formal, local recognition of Domestic Violence Awareness Month allows the community to spread awareness, acknowledge and show support for the victims of this horrific crime, and to recognize that it takes an entire community to stand together and make a difference and that together we can break the cycle of domestic violence and positively impact the lives of future generations.

NOW THEREFORE, BE IT PROCLAIMED BY THE FLAGLER COUNTY BOARD OF COUNTY COMMISSIONERS that **October 2026** is recognized as **"Domestic Violence Awareness Month"** in Flagler County and urges all citizens of Flagler County to become a part of the community response to end domestic violence and to send the message that this crime will not be tolerated in our community.

Adopted this 5th day of October 2026.

ATTEST:

FLAGLER COUNTY BOARD OF
COUNTY COMMISSIONERS

_____
Tom Bexley, Clerk of the
Circuit Court and Comptroller

_____
Leanne Pennington
Chair

A PROCLAMATION OF THE
FLAGLER COUNTY BOARD OF COUNTY COMMISSIONERS
RECOGNIZING OCTOBER 4-10, 2026, AS
"FIRE PREVENTION WEEK" IN FLAGLER COUNTY

WHEREAS, Flager County is committed to ensuring the safety and security of all those living in and visiting our county; and

WHEREAS, fire remains a serious public safety concern both locally and nationally, and the presence of lithium-ion batteries in many household devices introduces fire risks; and

WHEREAS, most of the rechargeable electronics used in homes daily, including smartphones, tablets, laptops, power tools, e-bikes, e-scooters, and toys, are powered by lithium-ion batteries, which if misused, damaged, or improperly charged, can overheat, start a fire, or explode; and

WHEREAS, the National Fire Protection Association® (NFPA®) reports an increase in battery-related fires, underscoring the need for public education on the safe use of lithium-ion batteries and battery-powered devices; and

WHEREAS, the way lithium-ion battery-powered devices are charged can make a difference in helping prevent home fires; and

WHEREAS, safe charging includes using the cord and charger that came with your device or one approved by the manufacturer, charging on a hard, flat surface, watching for warning signs like devices that are very hot or start to swell, unplugging when fully charged, and charging larger devices like e-bikes outside and away from exits; and

WHEREAS, residents are encouraged to understand that safe charging means making smart choices every time they plug in; and

WHEREAS, Flagler County's first responders remain dedicated to reducing the occurrence of fires through prevention, safety education, and community outreach; and

WHEREAS, the 2026 Fire Prevention Week™ theme, "Charge into Fire Safety™: Safe Charging Is a Superpower," serves to remind all residents that safe charging can help reduce the risk of fires in homes and communities.

NOW THEREFORE, BE IT PROCLAIMED BY THE FLAGLER COUNTY BOARD OF COUNTY COMMISSIONERS that **October 4-10, 2026** is recognized as **"Fire Prevention Week"** in Flagler County, and remind everyone of the theme **"Charge Into Fire Safety™. Safe Charging Is a Superpower"** for Fire Prevention Week 2026 and urge all citizens to support public safety activities and efforts of fire and emergency services.

Adopted this 5th day of October 2026.

ATTEST:

Flagler County Board of
County Commissioners

_____
Tom Bexley, Clerk of the
Circuit Court and Comptroller

_____
Leann Pennington
Chair

A PROCLAMATION OF THE
FLAGLER COUNTY BOARD OF COUNTY COMMISSIONERS
RECOGNIZING OCTOBER 14, 2026 AS
"CHARLIE KIRK DAY OF REMEMBRANCE"
IN FLAGLER COUNTY

WHEREAS, on September 10, 2025, Charles James "Charlie" Kirk – co-founder of Turning Point USA, media personality, author, and public speaker – was tragically assassinated at Utah Valley University while engaging in spirited debate with young Americans in an academic setting; and

WHEREAS, Charlie Kirk – born October 14, 1993, in Arlington Heights, Illinois – rose to national prominence advocating for youth civic engagement, conservative principles, patriotism, and faith-based activism, and his work sparked robust debate on political issues and inspired civic participation across the ideological spectrum; and

WHEREAS, Charlie's death shocked the nation, prompting voices across the political divide to condemn this act of violence and affirm the need for civil discourse, mutual respect, and the safeguarding of free speech; and

WHEREAS, in the wake of this tragedy, countless Americans have reflected on the importance of protecting open dialogue, encouraging respectful debate and the freedom of expression of differing ideas, and preserving the dignity and safety of all public figures and citizens; and

WHEREAS, while honoring Charlie Kirk's contributions to public life, we reaffirm our shared commitment to:

- Uphold the right to free and open exchange of ideas;
- Foster a culture of civil discourse and mutual respect in all civic contexts;
- Condemn political violence unequivocally; and
- Seek common ground through principled debate rather than hostility or fear.

NOW THEREFORE, BE IT PROCLAIMED BY THE FLAGLER COUNTY BOARD OF COUNTY COMMISSIONERS that **October 14, 2026** is recognized as **"Charlie Kirk Day of Remembrance"** in Flagler County in honor of his memory and in recognition of our collective responsibility to:

1. **Celebrate civic engagement** by encouraging citizens – especially youth – to participate actively in our democracy.
2. **Uphold free speech** and defend the rights of individuals to speak, advocate, and dissent.
3. **Promote non-violent public discourse** and reject all forms of political violence.

Let this proclamation serve as a solemn reminder of the costs of violence, the value of respectful dialogue, and the enduring strength of democratic institutions.

Adopted this 5th day of October, 2026.

Attest:

Tom Bexley, Clerk of the
Circuit Court and Comptroller

Flagler County Board of
County Commissioners

Leann Pennington
Chair

REPORT OF REVENUE COLLECTED
From the Courts to the Board of County Commissioners
For the Month of July , 2026
TRAFFIC, COUNTY AND CIRCUIT COURT REVENUE DEPOSITED TO:

			Check #
Board of County Commissioners			
Automation (Gen)		6,082.65	88141
Drivers Ed Trust Fund (Gen)		2,968.11	88141
Law Enforcement Education (Gen)		388.88	88141
Surcharge for Animal Control		20.00	88144
Pioneer Credit Recovery		-	0
Court Facilities		18,236.13	88139
Alcohol & Drug Abuse		593.92	88138
Legal Aid		1,367.07	88143
Law Library		1,357.97	88142
Court Innovations		1,358.53	88129
Juvenile Diversion		1,371.38	88132
Criminal Prevention		2,306.10	88131
Domestic Violence Trust Fund		1,316.42	88140
Teen Court		1,947.70	88133
Clerk of Court:			
Court General Fund		226,230.05	
Flagler County Sheriffs Office		3,277.66	88145
FL Dept of Economic Opportunity		220.00	0
FL Dept of Labor and Employment Security		-	88137
City of Bunnell		2,468.23	88134
City of Flagler Beach		1,442.22	88135
City of Palm Coast		8,406.80	8406.8
Filing Fees & Court Costs		64,401.08	EFT*
Indigent Criminal Defense TF	5,022.23		
Child Welfare Training TF	145.00		
Displaced Homemaker TF			
Domestic Violence TF	1,595.00		
State General Revenue Fund	11,815.00		
State Courts Revenue TF	35,684.00		
Court Education TF	1,767.50		
Dept of Financial Svcs Admin TF	922.00		
Clerks of the Court TF	-		
Ch 2008-111, Laws of FL	7,450.35		
DOR - Child Support Fees		333.40	EFT*
Non IV-D, SDU Cases	333.40		

REPORT OF REVENUE COLLECTED
From the Courts to the Board of County Commissioners
For the Month of July , 2026
TRAFFIC, COUNTY AND CIRCUIT COURT REVENUE DEPOSITED TO:

Motor Vehicles & Vessels		29,294.82	EFT*
Emergency Medical Services TF	2,751.61		
CRIMES COMPENSATION TF	189.00		
Dept of Health EMS TF			
State Courts Revenue TF	5,406.93		
Child Welfare Training TF	587.53		
HSMV Motor Vehicle License TF	3,408.00		
State General Revenue Fund	8,283.67		
DOH Administrative TF	-		
Brain and Spinal Cord Injury TF	2,344.69		
State Agency Law Enf Radio System TF	1,449.91		
State Attorneys Revenue TF	1,966.39		
Public Defenders Revenue TF	986.15		
Juvenile Welfare Training TF	587.47		
Additional Court Cost Clearing TF	562.22		
Epilepsy Services TF	60.00		
Nongame Wildlife TF	711.25		
Marine Resources Conservation TF	-		
Red Light Camera		-	EFT*
State General Revenue Fund	-		
Dept of Health Administrative TF	-		
Brain and Spinal Cord Injury TF	-		
Natural Resources & Conservation		-	
State Game TF	-		
Vital Statistics, Public Health, Tobacco		193.71	EFT*
Department of Health	173.71		
Solid Waste Mgmt TF	-		
Department of Education	20.00		
Crimes & Crimial Procedures		-	EFT*
State General Revenue Fund	-		
Crimes Compensation TF	-		
Additional Court Costs		21,693.71	EFT*
Crimes Compensation TF	9,239.05		
Emergency Medical Services TF	151.45		
FDLE Operating TF	288.09		
Brain and Spinal Cord Injury TF	357.46		
Domestic Violence TF	1,094.41		
Rape Crisis Program TF	1,609.71		
DCF Grants & Donations TF	376.41		
Dept of Bus & Prof Regulations	-		
Dept of Financial Services	-		
Fish & Wildlife Operating TF	-		
HSMV Motor Vehicle License TF	378.00		
FDLE Investigative Support TF	-		
Off of Statewide Prosecutor	-		
DOT State Transportation TF	-		
State Attorneys Revenue TF	8,199.13		

REPORT OF REVENUE COLLECTED
From the Courts to the Board of County Commissioners
For the Month of August , 2026
TRAFFIC, COUNTY AND CIRCUIT COURT REVENUE DEPOSITED TO:

			Check #
Board of County Commissioners			
Automation (Gen)		5,759.29	88343
Drivers Ed Trust Fund (Gen)		2,813.74	88343
Law Enforcement Education (Gen)		331.82	88343
Surcharge for Animal Control		-	0
Pioneer Credit Recovery		-	0
Court Facilities		17,486.05	88341
Alcohol & Drug Abuse		350.64	88340
Legal Aid		1,309.24	88345
Law Library		1,315.16	88344
Court Innovations		1,314.69	88331
Juvenile Diversion		1,305.58	88334
Criminal Prevention		2,173.31	88333
Domestic Violence Trust Fund		1,305.24	88342
Teen Court		1,854.46	88335
Clerk of Court:			
Court General Fund		218,023.47	
Flagler County Sheriffs Office		2,457.24	88346
FL Dept of Economic Opportunity		80.00	0
FL Dept of Labor and Employment Security		-	88339
City of Bunnell		1,796.01	88336
City of Flagler Beach		1,055.80	88337
City of Palm Coast		6,054.13	88338
Filing Fees & Court Costs		78,331.67	EFT*
Indigent Criminal Defense TF	2,328.27		
Child Welfare Training TF	195.00		
Displaced Homemaker TF			
Domestic Violence TF	2,145.00		
State General Revenue Fund	18,960.00		
State Courts Revenue TF	44,585.16		
Court Education TF	1,975.61		
Dept of Financial Svcs Admin TF	1,082.23		
Clerks of the Court TF	-		
Ch 2008-111, Laws of FL	7,060.40		
DOR - Child Support Fees		296.00	EFT*
Non IV-D, SDU Cases	296.00		

REPORT OF REVENUE COLLECTED
From the Courts to the Board of County Commissioners
For the Month of August , 2026
TRAFFIC, COUNTY AND CIRCUIT COURT REVENUE DEPOSITED TO:

Motor Vehicles & Vessels		27,011.34	EFT*
Emergency Medical Services TF	2,537.91		
CRIMES COMPENSATION TF	243.00		
Dept of Health EMS TF			
State Courts Revenue TF	4,986.06		
Child Welfare Training TF	552.35		
HSMV Motor Vehicle License TF	3,310.50		
State General Revenue Fund	7,384.12		
DOH Administrative TF	-		
Brain and Spinal Cord Injury TF	2,046.26		
State Agency Law Enf Radio System TF	1,421.97		
State Attorneys Revenue TF	1,867.40		
Public Defenders Revenue TF	936.50		
Juvenile Welfare Training TF	552.14		
Additional Court Cost Clearing TF	496.43		
Epilepsy Services TF	60.00		
Nongame Wildlife TF	616.70		
Marine Resources Conservation TF	-		
Red Light Camera		-	EFT*
State General Revenue Fund	-		
Dept of Health Administrative TF	-		
Brain and Spinal Cord Injury TF	-		
Natural Resources & Conservation		-	
State Game TF	-		
Vital Statistics, Public Health, Tobacco		403.61	EFT*
Department of Health	233.61		
Solid Waste Mgmt TF	50.00		
Department of Education	120.00		
Crimes & Crimial Procedures		-	EFT*
State General Revenue Fund	-		
Crimes Compensation TF	-		
Additional Court Costs		18,494.78	EFT*
Crimes Compensation TF	8,235.57		
Emergency Medical Services TF	222.23		
FDLE Operating TF	389.04		
Brain and Spinal Cord Injury TF	529.79		
Domestic Violence TF	991.18		
Rape Crisis Program TF	1,896.68		
DCF Grants & Donations TF	81.77		
Dept of Bus & Prof Regulations	-		
Dept of Financial Services	-		
Fish & Wildlife Operating TF	-		
HSMV Motor Vehicle License TF	200.00		
FDLE Investigative Support TF	-		
Off of Statewide Prosecutor	-		
DOT State Transportation TF	-		
State Attorneys Revenue TF	5,948.52		

Flagler County Board of County Commissioners - Disbursement Report Required per F.S. 136.06
Invoices Processed for period 08/29/26 to 09/04/26

Check Date	Check #	Vendor Name	Invoice #	Net Trans Amt	Description
08/18/26	3868	STATE OF FLORIDA	AIRPORT DOR JUL2026	$4,138.89	AIRPORT DOR JUL2026
			Check Total	$4,138.89	
08/31/26	3901	BLUE CROSS BLUE SHIELD OF FLORIDA	1000082893	$538,048.92	July 2026 Medical Claims Fess
			Check Total	$538,048.92	
08/31/26	3902	P&A ADMINISTRATIVE SERVICES, INC	08.29.2026	$348.75	P&A Flexible Spending 08.27.2026 - 08.28.2026
			Check Total	$348.75	
08/31/26	3903	P&A ADMINISTRATIVE SERVICES, INC	08.28.2026	$146.23	P&A Flexible Spending 08.20.2026 - 08.28.2026
			Check Total	$146.23	
08/31/26	3904	P&A ADMINISTRATIVE SERVICES, INC	08.30.2026	$102.36	P&A Flexible Spending 08.29.2026
			Check Total	$102.36	
09/01/26	3905	STATE OF FLORIDA	08072026	$167,311.54	Payroll Run 1 - Warrant 260807
			Check Total	$167,311.54	
09/01/26	3906	STATE OF FLORIDA	081426	$162,198.65	Payroll Run 1 - Warrant 260814
			Check Total	$162,198.65	
09/01/26	3907	STATE OF FLORIDA	08212026	$163,024.01	Payroll Run 1 - Warrant 260821
			Check Total	$163,024.01	
09/01/26	3908	STATE OF FLORIDA	082826	$159,395.53	Payroll Run 1 - Warrant 260828
			Check Total	$159,395.53	
09/01/26	3909	STATE OF FLORIDA	FRS Inv 350467	$13.38	BOCC Retirement Wire 08/2026 [redacted]
			Check Total	$13.38	
09/01/26	3910	STATE OF FLORIDA	FRS Inv 349491	$4,916.37	BOCC Retirement Wire 08/2026 Pension
			Check Total	$4,916.37	
09/01/26	3911	STATE OF FLORIDA	FRS Inv 349419	($232.97)	BOCC Retirement 08/26 Investment
			Check Total	($232.97)	
09/01/26	3912	DHARMA MERCHANT SERVICES, INC	FEES 0826	$709.29	PARKS - CC MONTHLY FEES ENDING 08/31/2026
			Check Total	$709.29	
09/01/26	3913	P&A ADMINISTRATIVE SERVICES, INC	08.31.2026	$384.18	P&A Flexible Spending 08.28.2026 - 08.31.2026

Flagler County Board of County Commissioners - Disbursement Report Required per F.S. 136.06
Invoices Processed for period 08/29/26 to 09/04/26

Check Date	Check #	Vendor Name	Invoice #	Net Trans Amt	Description
			Check Total	$384.18	
09/01/26	3914	P&A ADMINISTRATIVE SERVICES, INC	1087595	$350.00	P&A Flexible Spending 08.24.2026
			Check Total	$350.00	
09/01/26	3915	THE BANK OF NEW YORK MELLON TRUST COMPANY, NA	CT2479037 09012026	$2,843,625.00	FLAGLER COUNTY FL CI REF/REV 2024
			Check Total	$2,843,625.00	
09/02/26	3916	EXPRESS TAX - TTL WIRE	09042026	$143,039.04	Payroll Run 1 - Warrant 260904
			Check Total	$143,039.04	
09/02/26	3917	P&A ADMINISTRATIVE SERVICES, INC	09.01.2026	$1,529.33	P&A Flexible Spending 08.31.2026
			Check Total	$1,529.33	
09/03/26	3918	STATE OF FLORIDA	SEPT 2026	$172,010.00	COUNTY MEDICAID PROGRAM MATCHING FUNDS SEPT 26
			Check Total	$172,010.00	
09/03/26	3919	P&A ADMINISTRATIVE SERVICES, INC	09.02.2026	$396.09	P&A Flexible Spending 08.31.2026-09.01.2026
			Check Total	$396.09	
08/31/26	223004	4C'S TRUCKING & EXCAVATION, INC	FCRB2616	$8.10	DUMPING OF DIRTY CONCRETE SLABS
			Check Total	$8.10	
08/31/26	223005	ROBERT STEPHAN BISESI	4940	$479.95	REPAIRS TO MAIN GATE
			Check Total	$479.95	
08/31/26	223006	AIRESPRING, INC	212009901	$664.62	SAO MONTHLY INTERNET CHARGES 08.16.26-09.15.26
			Check Total	$664.62	
08/31/26	223007	AIRGAS USA LLC	9174820779	$336.04	Oxygen
08/31/26	223007	AIRGAS USA LLC	9174820809	$429.73	Oxygen
			Check Total	$765.77	
08/31/26	223008	ALPHA OMEGA GLASS & MIRROR, LLC	26-126-12-10	$2,368.74	WINDOW REPAIR - FCSO DISTRICT OFFICE
			Check Total	$2,368.74	
08/31/26	223009	AMERICAN JANITORIAL, INC.	33099	$630.00	EM Shelter Cot Cleaning
			Check Total	$630.00	
08/31/26	223010	AMY'S SIGNS & GUARDRAIL INC	81026-CR304	$33,100.00	GUARDRAIL INSTALLATION - CR304

Flagler County Board of County Commissioners - Disbursement Report Required per F.S. 136.06
Invoices Processed for period 08/29/26 to 09/04/26

Check Date	Check #	Vendor Name	Invoice #	Net Trans Amt	Description
			Check Total	$33,100.00	
08/31/26	223011	ANEW COUNSELING, LLC	02A/03A	$400.00	[redacted] June
			Check Total	$400.00	
08/31/26	223012	AT&T MOBILITY II LLC	287315918621 0926	$1,515.23	Cellular 08/17/26 - 09/17/27
08/31/26	223012	AT&T MOBILITY II LLC	287320351626 0826	$329.49	Cellular 07/18/26 - 08/17/26
			Check Total	$1,844.72	
08/31/26	223013	AULD & WHITE CONSTRUCTORS, LLC	1931-9NR	$42,691.00	SMA CENTRAL RECEIVING FACILITY 07/26
08/31/26	223013	AULD & WHITE CONSTRUCTORS, LLC	1931-9R	$814,114.38	SMA CENTRAL RECEIVING FACILITY 07/26
			Check Total	$856,805.38	
08/31/26	223014	AVCON, INC.	134314	$26,300.00	SERVICES FOR THE DESIGN OF NEW FUEL FARM
08/31/26	223014	AVCON, INC.	134315	$39,500.00	Professions services to address needs beyond maint
			Check Total	$65,800.00	
08/31/26	223015	BLADES GROUP LLC	18054881	$2,976.00	ROCK ASPHALT PATCH MATERIAL
			Check Total	$2,976.00	
08/31/26	223016	BLUE CROSS BLUE SHIELD OF FLORIDA	Aug 2026 Medical	$32,120.10	August 2026 Medical Admin Fees
			Check Total	$32,120.10	
08/31/26	223017	BLUETRITON BRANDS INC	06H6709631937	$67.67	WATER DELIVERY SERVICES - FINANCE 7.13-8.12.26
08/31/26	223017	BLUETRITON BRANDS INC	06H6709631943	$89.91	WATER DELIVERY SERVICES - ENGINEERING 7.19-8.18.26
08/31/26	223017	BLUETRITON BRANDS INC	06H6709631946	$62.94	WATER DELIVERY SERVICES - LEGAL 7.19-8.18.26
08/31/26	223017	BLUETRITON BRANDS INC	06H6709631955	$84.42	WATER DELIVERY SERVICES - LANDFILL 7.19-8.18.26
08/31/26	223017	BLUETRITON BRANDS INC	06H6709631961	$125.87	Station 71 Water Delivery Service
08/31/26	223017	BLUETRITON BRANDS INC	06H6709631962	$143.85	Station 51 Water Delivery Services
			Check Total	$574.66	
08/31/26	223018	BOHANNON BATTERY DISTRIBUTORS INC.	13042	$3,067.00	BATTERY, 665MF DEKA (65-72,MTP-65HD)
			Check Total	$3,067.00	
08/31/26	223019	BOULEVARD TIRE CENTER	27-121243	$3,461.00	TIRE SALES AND SERVICE - 11060

Flagler County Board of County Commissioners - Disbursement Report Required per F.S. 136.06
Invoices Processed for period 08/29/26 to 09/04/26

Check Date	Check #	Vendor Name	Invoice #	Net Trans Amt	Description
08/31/26	223019	BOULEVARD TIRE CENTER	27-GS122625	$2,944.00	TIRE, LT225/75R16 - BUS 002038
			Check Total	$6,405.00	
08/31/26	223020	BOUND TREE MEDICAL LLC	86324716	$96.91	EMS Medical Supplies
08/31/26	223020	BOUND TREE MEDICAL LLC	86330128	$4,197.62	EMS Medical Supplies
08/31/26	223020	BOUND TREE MEDICAL LLC	86330129	$132.54	EMS Medical Supplies
08/31/26	223020	BOUND TREE MEDICAL LLC	86331948	$1,587.56	EMS Medical Supplies
			Check Total	$6,014.63	
08/31/26	223021	CACCAVALE, GENICE	98747	$143.00	PER DIEM - GENICE CACCAVALE - FDLE SYMPOSIUM
			Check Total	$143.00	
08/31/26	223022	CDW GOVERNMENT LLC	AK5U22D	$6,858.93	EM Shelter Building Networking Equipment
08/31/26	223022	CDW GOVERNMENT LLC	AK6HB1L	$2,836.80	Stacking Cables - Networking Equipment
08/31/26	223022	CDW GOVERNMENT LLC	AK6MD3N	$171.55	Docking Station - Public Relations
08/31/26	223022	CDW GOVERNMENT LLC	AK6TQ6V	$90.59	Adobe Pro - JLord
08/31/26	223022	CDW GOVERNMENT LLC	AK6YI7I	$16,843.45	Remote Support - Privileged Access
08/31/26	223022	CDW GOVERNMENT LLC	AK7N93J	$1,847.53	Asana 08/10/26 - 11/29/26 Fire Rescue
			Check Total	$28,648.85	
08/31/26	223023	CENGAGE LEARNING INC.	999103063482	$30.40	Book purchases & database renewals
08/31/26	223023	CENGAGE LEARNING INC.	999103063483	$207.20	Book purchases & database renewals
08/31/26	223023	CENGAGE LEARNING INC.	999103064003	$29.60	Book purchases & database renewals
08/31/26	223023	CENGAGE LEARNING INC.	999103070973	$54.40	Book purchases & database renewals
			Check Total	$321.60	
08/31/26	223024	CENTRAL LANDINGS PARTNERS, LTD.	RO RO02140	$1,231.62	EA Assist [redacted] Sunset Blvd. #3111
			Check Total	$1,231.62	
08/31/26	223025	CITY OF FLAGLER BEACH	RO UO04255	$141.45	EA Assist [redacted] s 26th St
08/31/26	223025	CITY OF FLAGLER BEACH	RO UO04259	$119.81	EA Assist [redacted] Leslie St #141
			Check Total	$261.26	
08/31/26	223026	CITY OF PALM COAST	22638016	$143.53	ADC WATER SVC 06.24.2026-07.24.2026

Flagler County Board of County Commissioners - Disbursement Report Required per F.S. 136.06
Invoices Processed for period 08/29/26 to 09/04/26

Check Date	Check #	Vendor Name	Invoice #	Net Trans Amt	Description
08/31/26	223026	CITY OF PALM COAST	22669294	$2,147.65	2500 Palm Coast Pkwy NW 7.10.26-8.11.26
08/31/26	223026	CITY OF PALM COAST	22670432	$481.78	Water St 40 5593 N Oceanshore 07.10.26-08.11.26
08/31/26	223026	CITY OF PALM COAST	344534-19521 0726	$88.35	HAMMOCK CC - 79 MALACOMPRA - 07/10/26-08/11/26
08/31/26	223026	CITY OF PALM COAST	344535-19531 0726	$160.88	MALACOMPRA PARK-115 MALACOMPRA-07/10/26-08/11/26
08/31/26	223026	CITY OF PALM COAST	344536-19958 0726	$34.73	BINGS OLD CARETAKER - 5862 NOSB- 07/10/26-08/11/26
08/31/26	223026	CITY OF PALM COAST	344536-19960 0726	$219.53	BINGS RESTROOM - 5862 NOSB - 07/10/26-08/11/26
08/31/26	223026	CITY OF PALM COAST	344541-45015 0726	$60.21	HERSCHEL KING-1000 GRADY PRATHER-07/10/26-08/11/26
08/31/26	223026	CITY OF PALM COAST	640977-77968 0726	$91.15	LEHIGH TRL - 5695 COLBERT - 07/13/26-08/12/26
08/31/26	223026	CITY OF PALM COAST	694409-19097 0726	$279.96	FCSO - 14 PALM HARBOR - 7/10/26-8/11/26
08/31/26	223026	CITY OF PALM COAST	704579-80604 0726	$506.19	BAY DR PARK - 30 BAY DR - 07/10/26-08/11/26
08/31/26	223026	CITY OF PALM COAST	RO UO04265	$115.00	PCW Assist [redacted] Green #1012
08/31/26	223026	CITY OF PALM COAST	RO UO04266	$300.00	PCW Assist [redacted] Path A
08/31/26	223026	CITY OF PALM COAST	RO UO04267	$300.00	PCW Assist [redacted] drive
			Check Total	$4,928.96	
08/31/26	223027	CLARK PRODUCTIONS, INC.	009765	$10,075.12	Monitors for Judges
			Check Total	$10,075.12	
08/31/26	223028	COUNTY OF ST JOHNS BRD OF CTY COMM	FY26 QTR 3	$232,788.75	MEDICAL EXAMINER SERVICES FY26 - 3RD QTR
			Check Total	$232,788.75	
08/31/26	223029	DAYTONA SPORTSWEAR INC.	21286	$10.50	KFIN HATS FOR RESALE
			Check Total	$10.50	
08/31/26	223030	DIGITECH COMPUTER LLC	618004097	$21,678.96	Emergency Medical Transport Billing and Collection
			Check Total	$21,678.96	
08/31/26	223031	DORMAKABA USA INC	860439	$521.25	DOOR SWING REPLACEMENT AT SOE OFFICE
			Check Total	$521.25	

Flagler County Board of County Commissioners - Disbursement Report Required per F.S. 136.06
Invoices Processed for period 08/29/26 to 09/04/26

Check Date	Check #	Vendor Name	Invoice #	Net Trans Amt	Description
08/31/26	223032	ENVIRONMENTAL CONTROL SYSTEMS INC	31616	$275.00	PARKS - HIDDEN TRAILS - RO PUMP OUT
08/31/26	223032	ENVIRONMENTAL CONTROL SYSTEMS INC	31620	$475.00	SEPTIC PUMP & CLEAN OUT-LANDFILL
08/31/26	223032	ENVIRONMENTAL CONTROL SYSTEMS INC	31621	$275.00	PARKS - HIDDEN TRAILS - RO PUMP OUT
			Check Total	$1,025.00	
08/31/26	223033	STEALING TIMBER, LLC	051708	$2,764.62	PRESSURE WASHING THE TRIANGLE AIR BUSINESS PARK SO
			Check Total	$2,764.62	
08/31/26	223034	FASTENAL COMPANY	CM-FLORM62233	($43.00)	CREDIT MEMO FOR WRONG ITEM SENT
08/31/26	223034	FASTENAL COMPANY	FLORM62233	$799.04	REPLENISH INVENTORY
08/31/26	223034	FASTENAL COMPANY	FLORM62567	$482.00	DISC, CUT-OFF 3" 3 X 1/16 X 3/8 25000RPM 0211832
			Check Total	$1,238.04	
08/31/26	223035	FEDERAL EXPRESS CORPORATION	9-420-18304	$20.86	SHIPPING CHRGS- GIS & LEGAL
			Check Total	$20.86	
08/31/26	223036	FLAGLER CO CLERK OF CIRCUIT COURT &	082826	$10.00	Payroll Run 1 - Warrant 260828
			Check Total	$10.00	
08/31/26	223037	FLAGLER CO PROF FIREFIGHTERS ASSO	08072026	$1,236.00	Payroll Run 1 - Warrant 260807
08/31/26	223037	FLAGLER CO PROF FIREFIGHTERS ASSO	081426	$1,236.00	Payroll Run 1 - Warrant 260814
08/31/26	223037	FLAGLER CO PROF FIREFIGHTERS ASSO	08212026	$1,236.00	Payroll Run 1 - Warrant 260821
08/31/26	223037	FLAGLER CO PROF FIREFIGHTERS ASSO	082826	$1,236.00	Payroll Run 1 - Warrant 260828
			Check Total	$4,944.00	
08/31/26	223038	FLAGLER COUNTY BOARD OF COUNTY COMMISSIONERS	082826	$21,934.30	Payroll Run 1 - Warrant 260828
			Check Total	$21,934.30	
08/31/26	223039	FLAGLER COUNTY BOARD OF COUNTY COMMISSIONERS	0828.26	$3,061.91	Payroll Run 1 - Warrant 260828
			Check Total	$3,061.91	
08/31/26	223040	FLAGLER POWER EQUIPMENT	204504	$608.40	BLADE, MOWER 18" STANDARD H2504963 (ROT 3404)

Flagler County Board of County Commissioners - Disbursement Report Required per F.S. 136.06
Invoices Processed for period 08/29/26 to 09/04/26

Check Date	Check #	Vendor Name	Invoice #	Net Trans Amt	Description
			Check Total	$608.40	
08/31/26	223041	FLORIDA CLINICAL PRACTICE ASSOC	RO - MO13391	$39.95	IHC [redacted] RO MO13391
			Check Total	$39.95	
08/31/26	223042	FLORIDA JANITOR & PAPER SUPPLY INC	393044-1	$76.73	Janitorial Supplies
08/31/26	223042	FLORIDA JANITOR & PAPER SUPPLY INC	393818	$321.77	Janitorial Supplies
			Check Total	$398.50	
08/31/26	223043	FLORIDA POWER & LIGHT COMPANY	03688-49469 0726	$594.93	WADSWORTH SKATEPARK-2200 E MOODY-07/13/26-08/12/26
08/31/26	223043	FLORIDA POWER & LIGHT COMPANY	06874-05688 0726	$476.66	HAMMOCK CC - 79 MALACOMPRA - 06/24/26-07/24/26
08/31/26	223043	FLORIDA POWER & LIGHT COMPANY	07003-08471 0726	$1,056.31	CATTLEMANS HALL - 160 SAWGRASS - 07/02/26-08/04/26
08/31/26	223043	FLORIDA POWER & LIGHT COMPANY	13273-48205 0826	$1,118.37	245 CR 305 07/23/26 - 08/24/26
08/31/26	223043	FLORIDA POWER & LIGHT COMPANY	13295-01892 0726	$588.95	201 AIRPORT RD #HGRB
08/31/26	223043	FLORIDA POWER & LIGHT COMPANY	17227-13276 0726	$847.61	201 AIRPORT RD #VAULT
08/31/26	223043	FLORIDA POWER & LIGHT COMPANY	26131-18278 0726	$426.24	WADSWORTH SOCCER LT-2200 E MOODY-07/13/26 -08/12/26
08/31/26	223043	FLORIDA POWER & LIGHT COMPANY	26874-80067 0726	$363.31	CIVIC CONCESSION-160 SAWGRASS-07/02/26-08/04/26
08/31/26	223043	FLORIDA POWER & LIGHT COMPANY	32820-32121 0726	$258.16	LEGACY HOUSE - 2500 PP RD - 06/23/26-07/23/26
08/31/26	223043	FLORIDA POWER & LIGHT COMPANY	44446-01472 AUGUST26	$354.34	ADC Power 07.13.2026-08.12.2026
08/31/26	223043	FLORIDA POWER & LIGHT COMPANY	62068-57051 0726	$670.13	PPP LODGE - 2500 PP RD - 06/23/26-07/23/26
08/31/26	223043	FLORIDA POWER & LIGHT COMPANY	70616-13076 0826	$582.45	7570 CR 304 07/23/26 - 08/24/26
08/31/26	223043	FLORIDA POWER & LIGHT COMPANY	72877-30472 August26	$375.25	HHS Belle Terre Building FPL
08/31/26	223043	FLORIDA POWER & LIGHT COMPANY	73612-47260 0726	$361.83	WADSWORTH CONCESS-2200 E MOODY - 07/13/26-08/12/26
08/31/26	223043	FLORIDA POWER & LIGHT COMPANY	74328-22307 0726	$2,048.83	CARVER #AC - 203 E DRAIN - 07/07/26-08/06/26

Flagler County Board of County Commissioners - Disbursement Report Required per F.S. 136.06
Invoices Processed for period 08/29/26 to 09/04/26

Check Date	Check #	Vendor Name	Invoice #	Net Trans Amt	Description
08/31/26	223043	FLORIDA POWER & LIGHT COMPANY	80548-26360 0726	$256.35	PPP ISLAND HOUSE - 2500 PP RD - 06/23/26-07/23/26
08/31/26	223043	FLORIDA POWER & LIGHT COMPANY	81090-05747 0726	$275.43	HAW CREEK CC - 9257 CR 304 - 06/23/26-07/23/26
08/31/26	223043	FLORIDA POWER & LIGHT COMPANY	87094-96296 0726	$3,507.61	FAIRGROUNDS EXPO HALL - 07/09/26-08/04/26
08/31/26	223043	FLORIDA POWER & LIGHT COMPANY	93696-92117 0826	$636.67	FSCO - 14 PALM HARBOR VILLAGE - 07/20/26-08/19/26
08/31/26	223043	FLORIDA POWER & LIGHT COMPANY	94625-21015 0726	$736.33	1050 AVIATION DR #ATCT
			Check Total	$15,535.76	
08/31/26	223044	FLORIDA POWER & LIGHT COMPANY	12767-86025 0726	$150.91	HIDDEN TRLS CC - 6108 MAHOGANY - 06/25/26-07/27/26
08/31/26	223044	FLORIDA POWER & LIGHT COMPANY	18447-64587 0726	$132.86	FCRA RESTROOMS - 650 CR 13 - 07/02/26-08/04/26
08/31/26	223044	FLORIDA POWER & LIGHT COMPANY	21842-01701 0726	$158.06	PELLICER CC - 1380 CR 2007 - 06/23/26-07/23/26
08/31/26	223044	FLORIDA POWER & LIGHT COMPANY	36563-15029 0726	$142.21	HIDDEN TRLS WELL-6108 MAHOGANY-06/25/26-07/27/26
08/31/26	223044	FLORIDA POWER & LIGHT COMPANY	39675-97109 0726	$206.19	201 AIRPORT RD #LIGHTPOLES
08/31/26	223044	FLORIDA POWER & LIGHT COMPANY	42724-62468 0726	$153.27	200 TAXIWAY A#F
08/31/26	223044	FLORIDA POWER & LIGHT COMPANY	45899-08278 0726	$152.23	120 AIRPORT RD STA 2A
08/31/26	223044	FLORIDA POWER & LIGHT COMPANY	46026-27020 0726	$142.47	133 OLD MOODY BLVD
08/31/26	223044	FLORIDA POWER & LIGHT COMPANY	50828-09988 0726	$129.48	FCRA BBALL CONCESSION-650 CR 13-07/02/26-08/04/26
08/31/26	223044	FLORIDA POWER & LIGHT COMPANY	51321-23448 0726	$252.43	LM OFFICE - 9701 OCEANSHORE BLVD-06/29/26-07/29/26
08/31/26	223044	FLORIDA POWER & LIGHT COMPANY	60028-07961 0726	$178.78	FCRA SBALL #6,7,8 - 650 CR 13 - 07/02/26-08/04/26
08/31/26	223044	FLORIDA POWER & LIGHT COMPANY	61379-04931 0726	$165.34	ST JOHNS CC - 99 E CR 2006 - 07/02/26-08/04/26
08/31/26	223044	FLORIDA POWER & LIGHT COMPANY	75853-68025 0726	$126.49	153 OLD MOODY BLVD
08/31/26	223044	FLORIDA POWER & LIGHT COMPANY	78966-77429 0726	$154.32	201 AIRPORT RD #ES 1000S 100N

Flagler County Board of County Commissioners - Disbursement Report Required per F.S. 136.06
Invoices Processed for period 08/29/26 to 09/04/26

Check Date	Check #	Vendor Name	Invoice #	Net Trans Amt	Description
08/31/26	223044	FLORIDA POWER & LIGHT COMPANY	80012-71280 0826	$202.00	FCSO MALACOMPRA - 79 MALACOMPRA -7/24/26-8/25/26
08/31/26	223044	FLORIDA POWER & LIGHT COMPANY	87546-48304 0726	$235.41	ESPANOLA CC - 3570 CR 205 - 07/02/26-08/04/26
08/31/26	223044	FLORIDA POWER & LIGHT COMPANY	94499-89574 0726	$197.07	PPP COTTAGE#2&3 - 2610 PP RD - 06/23/26-07/23/26
08/31/26	223044	FLORIDA POWER & LIGHT COMPANY	96476-02979 0726	$247.03	201 AIRPORT RD # STREETLIGHTS
08/31/26	223044	FLORIDA POWER & LIGHT COMPANY	98404-98217 0726	$196.03	PED BRIDGE - 6380 E HWY 100 - 07/13/26-08/12/26
08/31/26	223044	FLORIDA POWER & LIGHT COMPANY	99642-72463 0726	$136.11	204 TAXIWAY A #H
			Check Total	$3,458.69	
08/31/26	223045	FLORIDA POWER & LIGHT COMPANY	01043-14372 0726	$88.89	WADSWORTH SOCCER LT-2200 E MOODY-07/13/26 -08/12/26
08/31/26	223045	FLORIDA POWER & LIGHT COMPANY	03925-07869 0726	$99.71	41 OLD MOODY BLVD #BLUET-HGRSW
08/31/26	223045	FLORIDA POWER & LIGHT COMPANY	10105-51479 0726	$80.47	201 AIRPORT RD #ES
08/31/26	223045	FLORIDA POWER & LIGHT COMPANY	13163-52549 0726	$100.15	NOSB #ES 6TN 16 ST - 07/02/26-08/04/26
08/31/26	223045	FLORIDA POWER & LIGHT COMPANY	16049-79573 0726	$93.98	PPP COTTAGE#1 - 2604 PP RD - 06/23/26-07/23/26
08/31/26	223045	FLORIDA POWER & LIGHT COMPANY	17482-31378 0726	$100.11	PPP ISLAND HOUSE - 1852 PP RD - 06/23/26-07/23/26
08/31/26	223045	FLORIDA POWER & LIGHT COMPANY	22985-08843 0726	$87.28	WADSWORTH TENNIS-2200 E MOODY-07/13/26-08/12/26
08/31/26	223045	FLORIDA POWER & LIGHT COMPANY	31858-72193 0726	$108.54	BC SW CAMP - 3861 W CR 2006 - 06/23/26-07/23/26
08/31/26	223045	FLORIDA POWER & LIGHT COMPANY	34697-10234 0726	$96.98	SHOW BARN - 650 CR 13 - 07/02/26-08/04/26
08/31/26	223045	FLORIDA POWER & LIGHT COMPANY	34837-91483 0726	$95.04	BC CAMP BATHHOUSE-3861 W CR 2006-06/23/26-07/23/26
08/31/26	223045	FLORIDA POWER & LIGHT COMPANY	50788-00983 0726	$78.74	FCRA BALL FIELDS#123-650 CR 13-07/02/26-08/04/26
08/31/26	223045	FLORIDA POWER & LIGHT COMPANY	74259-57136 0726	$76.97	131 AIRPORT RD #LIFTSTATION
08/31/26	223045	FLORIDA POWER & LIGHT COMPANY	76810-55310 0726	$75.52	WADSWORTH #SL - 2200 E MOODY - 07/02/26-08/04/26

Flagler County Board of County Commissioners - Disbursement Report Required per F.S. 136.06
Invoices Processed for period 08/29/26 to 09/04/26

Check Date	Check #	Vendor Name	Invoice #	Net Trans Amt	Description
08/31/26	223045	FLORIDA POWER & LIGHT COMPANY	85019-62461 0726	$93.48	202 TAXIWAY A #G
08/31/26	223045	FLORIDA POWER & LIGHT COMPANY	86149-11595 0726	$99.07	120 AIRPORT RD #HSE
08/31/26	223045	FLORIDA POWER & LIGHT COMPANY	86702-35418 0726	$79.32	41 OLD MOODY BLVD #BEIGT-HGRS
08/31/26	223045	FLORIDA POWER & LIGHT COMPANY	86933-00611 0726	$65.66	BINGS LANDING RESTROOM-5862 NOSB-06/24/26-07/24/26
08/31/26	223045	FLORIDA POWER & LIGHT COMPANY	92357-52210 0726	$109.26	HIDDEN TRLS #OL-6108 MAHOGANY-06/25/26-07/27/26
08/31/26	223045	FLORIDA POWER & LIGHT COMPANY	97465-21526 0726	$102.98	PED BRIDGE SIGNAL-5837 E HWY 100-07/06/26-08/05/26
08/31/26	223045	FLORIDA POWER & LIGHT COMPANY	99618-07139 0726	$83.86	HERSCHEL KING-1000 GRADY PRATHER-06/18/26-07/20/26
			Check Total	$1,816.01	
08/31/26	223046	FLORIDA POWER & LIGHT COMPANY	03915-09833 0726	$56.17	41 OLD MOODY BLVD #BLUET-HGRSEAS
08/31/26	223046	FLORIDA POWER & LIGHT COMPANY	05724-42036 0726	$41.10	WADSWORTH SOCCER LT-2200 E MOODY-07/13/26-08/12/26
08/31/26	223046	FLORIDA POWER & LIGHT COMPANY	06375-06288 0726	$50.30	BC CAMP ST LIGHT-3861 W CR 2006- 06/23/26-07/23/26
08/31/26	223046	FLORIDA POWER & LIGHT COMPANY	07470-13431 Aug 26	$50.58	2500 Palm Coast Pkwy NW Pump 7.17.26-8.18.26
08/31/26	223046	FLORIDA POWER & LIGHT COMPANY	12592-00911 0726	$57.29	MOODY BOAT LAUNCH - 815 MOODY - 07/08/26-08/07/26
08/31/26	223046	FLORIDA POWER & LIGHT COMPANY	13195-06828 0726	$40.18	201 AIRPORT RD #FUELFARM
08/31/26	223046	FLORIDA POWER & LIGHT COMPANY	13664-19370 0726	$44.14	PPP RESTROOM/BARN - 2500 PP RD - 06/23/26-07/23/26
08/31/26	223046	FLORIDA POWER & LIGHT COMPANY	17255-00381 07.26	$58.88	ST-LGT # I/O CR 302 & S 07.06.2026 THRU 08.05.2026
08/31/26	223046	FLORIDA POWER & LIGHT COMPANY	20156-99081 0726	$36.30	303 OLD MOODY BLVD #HSE
08/31/26	223046	FLORIDA POWER & LIGHT COMPANY	20877-23538 0726	$59.55	OLD DIXIE PARK-1250 S OLD DIXIE-007/01/26-08/03/26
08/31/26	223046	FLORIDA POWER & LIGHT COMPANY	27952-43464 0726	$38.06	SHELL BLUFF - 14331 W HWY 100 - 07/02/26-08/04/26
08/31/26	223046	FLORIDA POWER & LIGHT COMPANY	35222-51366 0726	$44.08	BAY DR PARK - 30 BAY DR - 07/01/26-08/03/26

Flagler County Board of County Commissioners - Disbursement Report Required per F.S. 136.06
Invoices Processed for period 08/29/26 to 09/04/26

Check Date	Check #	Vendor Name	Invoice #	Net Trans Amt	Description
08/31/26	223046	FLORIDA POWER & LIGHT COMPANY	43976-81067 0726	$36.48	FAIRGROUND IRRIGAT-160 SAWGRASS-07/02/26-08/04/26
08/31/26	223046	FLORIDA POWER & LIGHT COMPANY	53126-12590 0726	$53.97	267 OLD MOODY BLVD #HSE
08/31/26	223046	FLORIDA POWER & LIGHT COMPANY	54157-98148 0726	$57.87	LEHIGH TRL - 5695 COLBERT - 06/18/26-07/20/26
08/31/26	223046	FLORIDA POWER & LIGHT COMPANY	54157-98148 0826	$58.25	LEHIGH TRL - 5695 COLBERT - 07/20/26-08/19/26
08/31/26	223046	FLORIDA POWER & LIGHT COMPANY	56205-24370 0726	$34.59	VARN PARK - 3665 NOSB - 06/24/26-07/24/26
08/31/26	223046	FLORIDA POWER & LIGHT COMPANY	60038-05998 0726	$34.59	FCRA SBALL CONCESSION-650 CR 13-07/02/26-08/04/26
08/31/26	223046	FLORIDA POWER & LIGHT COMPANY	77979-32220 0726	$46.93	RUSSELL LANDING PAV-2007 CR 2007-06/23/26-07/23/26
08/31/26	223046	FLORIDA POWER & LIGHT COMPANY	99618-07139 0826	$65.39	HERSCHEL KING-1000 GRADY PRATHER-07/20/26-08/19/26
			Check Total	$964.70	
08/31/26	223047	FLORIDA POWER & LIGHT COMPANY	00102-45512 0726	$31.48	1000 AVIATION DR # LTSWEST
08/31/26	223047	FLORIDA POWER & LIGHT COMPANY	01366-80451 0726	$32.76	WADS SCOREBOARD - 2200 E MOODY - 07/13/26-08/12/26
08/31/26	223047	FLORIDA POWER & LIGHT COMPANY	03888-82060 0726	$33.51	FAIRGROUNDS #LS - 160 SAWGRASS - 07/02/26-08/04/26
08/31/26	223047	FLORIDA POWER & LIGHT COMPANY	03937-28589 0726	$31.98	PPP 2ND GATE - 2500 PP RD - 06/23/26-07/23/26
08/31/26	223047	FLORIDA POWER & LIGHT COMPANY	16064-05635 0726	$33.11	MALACOMPRA PARK-115 MALACOMPRA-06/24/26-07/24/26
08/31/26	223047	FLORIDA POWER & LIGHT COMPANY	21728-50535 0726	$31.48	A1A TENNIS CT - 5633 NOSB - 06/29/26-07/29/26
08/31/26	223047	FLORIDA POWER & LIGHT COMPANY	21962-09718 0726	$31.09	PELLICER ARENA - 1380 CR 2007 - 06/23/26-07/23/26
08/31/26	223047	FLORIDA POWER & LIGHT COMPANY	31007-31375 0726	$30.94	FCRA FIELD#5 PUMP - 650 CR 13 - 07/02/26-08/04/26
08/31/26	223047	FLORIDA POWER & LIGHT COMPANY	36350-83011 0726	$30.80	5885 E HIGHWAY 100 #GATE
08/31/26	223047	FLORIDA POWER & LIGHT COMPANY	44664-41492 0726	$33.55	PPP - OLD CARETAKER-2500 PP RD - 06/23/26-07/23/26
08/31/26	223047	FLORIDA POWER & LIGHT COMPANY	45498-00391 0726	$33.78	PPP EQUEST CAMP - 2500 PP RD - 06/23/26-07/23/26

Flagler County Board of County Commissioners - Disbursement Report Required per F.S. 136.06
Invoices Processed for period 08/29/26 to 09/04/26

Check Date	Check #	Vendor Name	Invoice #	Net Trans Amt	Description
08/31/26	223047	FLORIDA POWER & LIGHT COMPANY	45806-91493 0726	$33.46	201 AIRPORT RD #ENTRANCESIGN
08/31/26	223047	FLORIDA POWER & LIGHT COMPANY	48120-11007 0726	$30.89	FCRA FIELD#4 - 650 CR 13 - 07/02/26-08/04/26
08/31/26	223047	FLORIDA POWER & LIGHT COMPANY	61332-55411 0726	$30.80	BC - 3732 W CR 2006 #1 - 06/23/26-07/23/26
08/31/26	223047	FLORIDA POWER & LIGHT COMPANY	64470-84044 0726	$32.38	RUSSELL LAND CAMP-1669 CR 2007 -06/23/26-07/23/26
08/31/26	223047	FLORIDA POWER & LIGHT COMPANY	74064-79332 0726	$33.78	OLD SALT PARK - 200 16TH - 06/29/26-07/29/26
08/31/26	223047	FLORIDA POWER & LIGHT COMPANY	78658-98345 0726	$30.80	FCRA PUMP HOUSE - 650 CR 13 - 07/02/26-08/04/26
08/31/26	223047	FLORIDA POWER & LIGHT COMPANY	81713-40493 0726	$30.80	PPP OPEN FIELD - 2500 PP RD - 06/23/26-07/23/26
08/31/26	223047	FLORIDA POWER & LIGHT COMPANY	90600-43370 0726	$30.42	WADSWORTH #OL - 2200 E MOODY - 07/13/26-08/12/26
08/31/26	223047	FLORIDA POWER & LIGHT COMPANY	91194-99433 0726	$31.60	BINGS LANDING PAV - 5862 NOSB - 06/24/26-07/24/26
			Check Total	$639.41	
08/31/26	223048	FLORIDA POWER & LIGHT COMPANY	31708-98138 0726	$28.52	CARVER #OL - 203 E DRAIN - 07/07/26-08/06/26
08/31/26	223048	FLORIDA POWER & LIGHT COMPANY	50998-03925 0726	$13.25	FCRA #OL - 650 CR 13 - 07/02/26-08/04/26
08/31/26	223048	FLORIDA POWER & LIGHT COMPANY	55778-80338 0726	$12.46	PPP OUTSIDE LT - 2500 PP RD - 06/23/26-07/23/26
08/31/26	223048	FLORIDA POWER & LIGHT COMPANY	83341-06518 0726	$24.92	PPP OUTSIDE LT 2 - 2500 PP RD - 06/23/26-07/23/26
08/31/26	223048	FLORIDA POWER & LIGHT COMPANY	84309-36099 Aug 26	$26.91	2500 Palm Coast Pkwy NW Library-OL
			Check Total	$106.06	
08/31/26	223049	FLORIDA POWER & LIGHT COMPANY-ASSIS	RO UO04264	$284.00	EA Assist [redacted] Green #1012
			Check Total	$284.00	
08/31/26	223050	FORNELL ENTERPRISES INC.	1024363	$295.11	AEROSHELL OIL W 100 $57.37 PER CASE X 20 = $1147.4
			Check Total	$295.11	
08/31/26	223051	GARBER CHEVROLET BUICK GMC INC.	28961	$57,244.00	2026 CHEVROLET TAHOE 4WD 9C1 PPV FCID 11068

Flagler County Board of County Commissioners - Disbursement Report Required per F.S. 136.06
Invoices Processed for period 08/29/26 to 09/04/26

Check Date	Check #	Vendor Name	Invoice #	Net Trans Amt	Description
			Check Total	$57,244.00	
08/31/26	223052	GIDDENS SECURITY CORP	23477751	$630.00	SECURITY PBOARD, MAGISTRATE, CRB JUNE
			Check Total	$630.00	
08/31/26	223053	GIS PLANNING, INC	2121007100	$5,500.00	EDO GIS PLANNNING FY26
			Check Total	$5,500.00	
08/31/26	223054	GMS SOUTHEAST, INC	1888081-00	$43,565.41	ODP FOR FS 50 METAL FRAMING/DRYWALL/ACT 05/26
08/31/26	223054	GMS SOUTHEAST, INC	1888081-01	$1,326.40	ODP FOR FS 50 METAL FRAMING/DRYWALL/ACT 05/26
08/31/26	223054	GMS SOUTHEAST, INC	1888081-02	$2,584.00	ODP FOR FS 50 METAL FRAMING/DRYWALL/ACT 06/26
08/31/26	223054	GMS SOUTHEAST, INC	2003143-00	$3,635.73	ODP FOR FS 50 METAL FRAMING/DRYWALL/ACT 07/26
08/31/26	223054	GMS SOUTHEAST, INC	2006042-00	$1,029.60	ODP FOR FS 50 METAL FRAMING/DRYWALL/ACT 07/26
08/31/26	223054	GMS SOUTHEAST, INC	2006836-00	$996.80	ODP FOR FS 50 METAL FRAMING/DRYWALL/ACT 07/26
08/31/26	223054	GMS SOUTHEAST, INC	2012872-00	$694.23	ODP FOR FS 50 METAL FRAMING/DRYWALL/ACT 07/26
08/31/26	223054	GMS SOUTHEAST, INC	2012874-00	$3,804.57	ODP FOR FS 50 METAL FRAMING/DRYWALL/ACT 07/26
08/31/26	223054	GMS SOUTHEAST, INC	2016157-00	$2,100.84	ODP FOR FS 50 METAL FRAMING/DRYWALL/ACT 08/26
08/31/26	223054	GMS SOUTHEAST, INC	2027734-00	$2,910.08	ODP FOR FS 50 METAL FRAMING/DRYWALL/ACT 08/26
			Check Total	$62,647.66	
08/31/26	223055	GRAFT, INC	653479	$395.00	WEB PACKAGE JULY 26
08/31/26	223055	GRAFT, INC	653490	$395.00	WEB PACKAGE AUG 26
			Check Total	$790.00	
08/31/26	223056	H.R. LEWIS PETROLEUM CO.	380446	$6,416.80	Oil and Grease
			Check Total	$6,416.80	
08/31/26	223057	HARDWICK FENCE, LLC	157564	$4,748.19	GATES & FENCING - FCSO SUBSTATION
			Check Total	$4,748.19	
08/31/26	223058	HOGAN GLASS CORPORATION	52754	$4,350.00	ADDITIONAL GLASS INSTALLATION/'REPAIRS-SOE OFFICE

Flagler County Board of County Commissioners - Disbursement Report Required per F.S. 136.06
Invoices Processed for period 08/29/26 to 09/04/26

Check Date	Check #	Vendor Name	Invoice #	Net Trans Amt	Description
08/31/26	223058	HOGAN GLASS CORPORATION	52788	$480.00	ADDITIONAL GLASS INSTALLATION/'REPAIRS-SOE OFFICE
			Check Total	$4,830.00	
08/31/26	223059	INGRAM LIBRARY SERVICES, LLC	98621022	$271.10	Purchase of Library Books and Materials
08/31/26	223059	INGRAM LIBRARY SERVICES, LLC	98621023	$17.86	Purchase of Library Books and Materials
08/31/26	223059	INGRAM LIBRARY SERVICES, LLC	98621024	$38.62	Purchase of Library Books and Materials
08/31/26	223059	INGRAM LIBRARY SERVICES, LLC	98621025	$57.07	Purchase of Library Books and Materials
08/31/26	223059	INGRAM LIBRARY SERVICES, LLC	98621026	$119.32	Purchase of Library Books and Materials
08/31/26	223059	INGRAM LIBRARY SERVICES, LLC	98621027	$2,134.17	Purchase of Library Books and Materials
08/31/26	223059	INGRAM LIBRARY SERVICES, LLC	98621028	$35.37	Purchase of Library Books and Materials
08/31/26	223059	INGRAM LIBRARY SERVICES, LLC	98621029	$48.58	Purchase of Library Books and Materials
08/31/26	223059	INGRAM LIBRARY SERVICES, LLC	98621030	$82.75	Purchase of Library Books and Materials
08/31/26	223059	INGRAM LIBRARY SERVICES, LLC	98621031	$246.79	Purchase of Library Books and Materials
08/31/26	223059	INGRAM LIBRARY SERVICES, LLC	98635947	$118.18	Purchase of Library Books and Materials
08/31/26	223059	INGRAM LIBRARY SERVICES, LLC	98635948	$15.16	Purchase of Library Books and Materials
08/31/26	223059	INGRAM LIBRARY SERVICES, LLC	98635949	$131.69	Purchase of Library Books and Materials
			Check Total	$3,316.66	
08/31/26	223060	JACOB L WILKERSON	000465	$2,634.00	Shower Platform System
			Check Total	$2,634.00	
08/31/26	223061	J & D COPSY ENTERPRISES, INC.	16164	$2,925.00	CONTRACTED REPAIR TO SIDEWALK - ROBERTS RD
			Check Total	$2,925.00	
08/31/26	223062	JAVCO ROOFING LLC	08122026-1	$16,782.00	Complete Re-Roof [redacted] Palm Street Bunnell 32110
			Check Total	$16,782.00	
08/31/26	223063	JOHNSON CONTROLS US HOLDINGS INC	54357293	$8,797.50	2 YEAR ENGINE SERVICE ON FIRE PUMP - ENERGY PLANT
08/31/26	223063	JOHNSON CONTROLS US HOLDINGS INC	54362175	$2,116.53	TROUBLESHOOT FIRE PANEL - INMATE FACILITY
08/31/26	223063	JOHNSON CONTROLS US HOLDINGS INC	54381848	$347.36	INV#54381848 - INMATE FACILITY - REPLACE SPRINKLER

Flagler County Board of County Commissioners - Disbursement Report Required per F.S. 136.06
Invoices Processed for period 08/29/26 to 09/04/26

Check Date	Check #	Vendor Name	Invoice #	Net Trans Amt	Description
08/31/26	223063	JOHNSON CONTROLS US HOLDINGS INC	54390716	$729.79	INV#54390716 - REPAIR BACKFLOW - OLD COURTHOUSE
			Check Total	$11,991.18	
08/31/26	223064	JONES, EDMUNDS & ASSOCIATES INC	0258713	$11,660.00	EVALUATION OF MARINELAND WW FACILITY
			Check Total	$11,660.00	
08/31/26	223065	KIMLEY-HORN AND ASSOCIATES, INC.	36614216	$4,532.17	BULOW CREEK HEADWATER REGIONAL PARK 07/26
			Check Total	$4,532.17	
08/31/26	223066	[redacted]	RO RO02143	$975.00	EA Assist [redacted] Pittson Ln
			Check Total	$975.00	
08/31/26	223067	LOVIE HALEY	TRAVEL 08.11.26	$225.00	TRAVEL REIMB L-105 PUBLIC INFORMATION BASICS
			Check Total	$225.00	
08/31/26	223068	LOWE'S HOME CENTERS, LLC	64763	$1,267.76	TRUFUEL 50:1 RATIO 110OZ #644853 2 CYCLE MIX
08/31/26	223068	LOWE'S HOME CENTERS, LLC	70574	$206.31	PVC PIPE - PVC CEMENT - RIVER TO SEA RESTROOMS
08/31/26	223068	LOWE'S HOME CENTERS, LLC	83833	$14.80	VALVE BOX - RIVER TO SEA RESTROOMS
			Check Total	$1,488.87	
08/31/26	223069	MCKESSON MEDICAL-SURGICAL INC	26095297	$822.55	MEDICAL GOODS & SUPPLIES FOR EMPLOYEE CLINIC
			Check Total	$822.55	
08/31/26	223070	MESOTECH INTERNATIONAL, INC.	INV143402	$2,342.00	Temperature and Relative Humidity Probe
			Check Total	$2,342.00	
08/31/26	223071	METAL STRUCTURES COMPANY USA, LLC	MS9085	$10,638.50	METAL CARPORT - MALACOMPRA FCSO SUB STATION
			Check Total	$10,638.50	
08/31/26	223072	MICHAEL HOFER STUCCO & PLASTERING	#1	$7,940.00	STUCCO APPLICATION-RIVER TO SEA RESTROOM
			Check Total	$7,940.00	
08/31/26	223073	MOBILE COMMUNICATIONS AMERICA, INC.	725001245-1	$734.00	Tier 5 Radio Repair 466CVK0889

Flagler County Board of County Commissioners - Disbursement Report Required per F.S. 136.06
Invoices Processed for period 08/29/26 to 09/04/26

Check Date	Check #	Vendor Name	Invoice #	Net Trans Amt	Description
08/31/26	223073	MOBILE COMMUNICATIONS AMERICA, INC.	725001268-1	$1,782.00	Tier 7 Radio Repairs 481CVK2248 & 481CVK2255
			Check Total	$2,516.00	
08/31/26	223074	MOSCOWITZ, JOHN	TR SUMMER 2026	$1,234.11	PUB 622 & PUB 623
			Check Total	$1,234.11	
08/31/26	223075	NAFECO	1440392	$251.72	Gloves
			Check Total	$251.72	
08/31/26	223076	NATIONAL AUTO PARTS WAREHOUSE, LLC	118-00166247	$2,914.39	CLEANER, BRAKE 19OZ. (12/CS) PMZ 0734
			Check Total	$2,914.39	
08/31/26	223077	NEUROLOGY ASSOCIATES OF ORMOND BEACH PA	RO MO13356	$238.11	IHC Assist [redacted] RO Mo13356
08/31/26	223077	NEUROLOGY ASSOCIATES OF ORMOND BEACH PA	RO MO13407	$213.19	IHC Assist [redacted] RO MO13407
			Check Total	$451.30	
08/31/26	223078	NEXTERA ENERGY SERVICES	37108929	$1,117.29	FSCO INMATE FAC - 1002 JUSTICE - 6/30/26-7/29/26
			Check Total	$1,117.29	
08/31/26	223079	NORTHEAST FLORIDA REGIONAL COUNCIL	26-132	$11,020.00	4th QUARTER DUES FY 25/26
			Check Total	$11,020.00	
08/31/26	223080	OTIS ELEVATOR COMPANY	100402435827	$233.00	ATCT ELEVATOR MONTHLY MAINTENANCE, INSPECTIONS AN
			Check Total	$233.00	
08/31/26	223081	PALM POINTE HOLDINGS	RO RO02142	$1,525.00	EA Assist [redacted] E Moody Blvd # 16-I
			Check Total	$1,525.00	
08/31/26	223082	SMITH, CHARLES G.	FG20250627	$3,840.00	DIAGNOSING AND REMOVING THE POSITION
			Check Total	$3,840.00	
08/31/26	223083	PRIME HEALTH SERVICES, INC	117632	$485.67	INMATE MEDICAL [redacted]. 12.11.25
08/31/26	223083	PRIME HEALTH SERVICES, INC	117633	$622.96	INMATE MEDICAL [redacted] 07.10.26

Flagler County Board of County Commissioners - Disbursement Report Required per F.S. 136.06
Invoices Processed for period 08/29/26 to 09/04/26

Check Date	Check #	Vendor Name	Invoice #	Net Trans Amt	Description
08/31/26	223083	PRIME HEALTH SERVICES, INC	117634	$278.18	INMATE MEDICAL [redacted] 07.13.26
			Check Total	$1,386.81	
08/31/26	223084	THE QUIKRETE COMPANIES	34546036	$1,316.00	CONCRETE - RIVER TO SEA RESTROOM
			Check Total	$1,316.00	
08/31/26	223085	BARBER, HEATHER	15832 - BARBER	$200.00	15832 - PPP COTTAGE#2
			Check Total	$200.00	
08/31/26	223086	BLANDFORD, ZACHARY	15753 - BLANDFORD	$200.00	15753 - PPP COTTAGE#3
			Check Total	$200.00	
08/31/26	223087	BONGIOVANNI, NICK	15788- BONGIOVANNI	$100.00	15788 - PPP PAVILION
			Check Total	$100.00	
08/31/26	223088	BORROWMAN, KELLY	15496-2 - BORROWMAN	$250.00	15496-2 - PPP COTTAGE#1 - CANCELLATION
			Check Total	$250.00	
08/31/26	223089	BORROWMAN, KELLY	15496-1 - BORROWMAN	$200.00	15496-1 - PPP COTTAGE#1 - CANCELLATION
			Check Total	$200.00	
08/31/26	223090	BREEDEN, HUNTER	15780 - BREEDEN	$40.00	15780 - PPP CAMPING - CANCELLATION
			Check Total	$40.00	
08/31/26	223091	CATHY HEIGHTER	20260826	$1,762.49	REFUND PERMIT 2024060266
			Check Total	$1,762.49	
08/31/26	223092	DR HORTON INC	REFUND 202601154	$6,666.00	REFUND- PRMT 2026010154, 2026010156
			Check Total	$6,666.00	
08/31/26	223093	EVERITT, CAROL	15391-1 - EVERITT	$375.00	15391-1 - PPP COTTAGE#2 - CANCELLATION
			Check Total	$375.00	
08/31/26	223094	FORD-BUTLER, WINDY	15426 - FORD-BUTLER	$100.00	15426 - ESPANOLA CC - CANCELLATION
			Check Total	$100.00	

Flagler County Board of County Commissioners - Disbursement Report Required per F.S. 136.06
Invoices Processed for period 08/29/26 to 09/04/26

Check Date	Check #	Vendor Name	Invoice #	Net Trans Amt	Description
08/31/26	223095	GALVANI, ALYSSA	15086-1 - GALVANI	$100.00	15086-1 - PPP OPEN FIELD - CANCELLATION
			Check Total	$100.00	
08/31/26	223096	GALVANI, ALYSSA	15086-2 - GALVANI	$100.00	15086-2 - PPP OPEN FIELD - CANCELLATION
			Check Total	$100.00	
08/31/26	223097	GREBNEV, ALEKSEI	15563 - GREBNEV	$100.00	15563 - HAMMOCK CC
			Check Total	$100.00	
08/31/26	223098	HISPANIC AMERICAN CULTURAL SOCIETY	14582-2- HISPANIC AME	$50.00	14582-2 - HAMMOCK CC - CANCELLATION
			Check Total	$50.00	
08/31/26	223099	HISPANIC AMERICAN CULTURAL SOCIETY	14582-1- HISPANIC AME	$100.00	14582-1 - HAMMOCK CC - CANCELLATION
			Check Total	$100.00	
08/31/26	223100	HUGHES, PATTY	15278 - HUGHES	$100.00	15278 - HAMMOCK CC & PAVILION
			Check Total	$100.00	
08/31/26	223101	KIEHNER, LAURA	15146-1 - KIEHNER	$200.00	15146-1 - PPP COTTAGE#1 - CANCELLATION
			Check Total	$200.00	
08/31/26	223102	KIEHNER, LAURA	15146-2 - KIEHNER	$250.00	15146-2 - PPP COTTAGE#1 - CANCELLATION
			Check Total	$250.00	
08/31/26	223103	LIFE LINE SCREENING	15537 - LIFE LINE	$100.00	15537 - HAMMOCK CC
			Check Total	$100.00	
08/31/26	223104	LISA BOECKER	15066 - BOECKER	$100.00	15066 - PELLICER CC
			Check Total	$100.00	
08/31/26	223105	LIVINGOOD, MOLLY	15717-1 - LIVINGOOD	$100.00	15717-1 - HAMMOCK CC - CANCELLATION
			Check Total	$100.00	
08/31/26	223106	LIVINGOOD, MOLLY	15717-2 - LIVINGOOD	$30.00	15717-2 - HAMMOCK CC - CANCELLATION

Flagler County Board of County Commissioners - Disbursement Report Required per F.S. 136.06
Invoices Processed for period 08/29/26 to 09/04/26

Check Date	Check #	Vendor Name	Invoice #	Net Trans Amt	Description
			Check Total	$30.00	
08/31/26	223107	LYNCH, SHERI	15434 - LYNCH	$100.00	15434 - HAW CREEK CC
			Check Total	$100.00	
08/31/26	223108	MAXWELL, KATHLEEN	15676 - MAXWELL	$200.00	15676 - PPP COTTAGE#3
			Check Total	$200.00	
08/31/26	223109	MCKAY, BIANCA	15709 - MCKAY	$100.00	15709 - HAMMOCK CC - CANCELLATION
			Check Total	$100.00	
08/31/26	223110	NGUYEN, PHONG	15562 - NGUYEN	$100.00	15562 - BAY DRIVE PARK PAVILION
			Check Total	$100.00	
08/31/26	223111	NIGRO, GENNALY	15643 - NIGRO	$100.00	15643 - PPP OPEN FIELD
			Check Total	$100.00	
08/31/26	223112	NOWACZYK, DAN	15408 - NOWACZYK	$200.00	15408 - PPP COTTAGE#1
			Check Total	$200.00	
08/31/26	223113	REYES, JESSIE	15458-1 - REYES	$100.00	15458-1 - ESPANOLA CC - REFUND
			Check Total	$100.00	
08/31/26	223114	REYES, JESSIE	15458-2 - REYES	$50.00	15458-2 - ESPANOLA CC - REFUND
			Check Total	$50.00	
08/31/26	223115	REYES, JESSIE	15458-3 - REYES	$120.00	15458-3 - ESPANOLA CC - REFUND
			Check Total	$120.00	
08/31/26	223116	SCHADEGG, SOPHIA	15722 - SCHADEGG	$50.00	15722 - HAW CREEK CC
			Check Total	$50.00	
08/31/26	223117	SCZYREK, STAN JOE	15771 - SCZYREK	$200.00	15771 - PPP COTTAGE#3
			Check Total	$200.00	
08/31/26	223118	SPECTOR, SARAH	15713 - SPECTOR	$200.00	15713 - PPP COTTAGE#2
			Check Total	$200.00	
08/31/26	223119	SPRY, CHASTITY	15457 - SPRY	$100.00	15457 - PELLICER CC

Flagler County Board of County Commissioners - Disbursement Report Required per F.S. 136.06
Invoices Processed for period 08/29/26 to 09/04/26

Check Date	Check #	Vendor Name	Invoice #	Net Trans Amt	Description
			Check Total	$100.00	
08/31/26	223120	SUMMA, DANIELLE	15630 - SUMMA	$100.00	15630 - HAMMOCK CC
			Check Total	$100.00	
08/31/26	223121	TROOP 281	15614 - TROOP 281	$100.00	15614 - BAY DRIVE PARK PAVILION
			Check Total	$100.00	
08/31/26	223122	VOLPE, SAMANTHA	15605 - VOLPE	$100.00	15605 - HAMMOCK PARK PAVILION
			Check Total	$100.00	
08/31/26	223123	WALKER, JIMMY	15623-2 - WALKER	$250.00	15623-2 - PPP COTTAGE#2 - CANCELLATION
			Check Total	$250.00	
08/31/26	223124	WALKER, JIMMY	15623-1 - WALKER	$200.00	15623-1 - PPP COTTAGE#2 - CANCELLATION
			Check Total	$200.00	
08/31/26	223125	WANERKA, KAITLYN	15644 - WANERKA	$100.00	15644 - PELLICER CC
			Check Total	$100.00	
08/31/26	223126	WIGHT, WILLIAM	13999-2 - WIGHT	$1,500.00	13999-2 - PPP COTTAGE#2 & 3-CANCELLATION
			Check Total	$1,500.00	
08/31/26	223127	WIGHT, WILLIAM	13999-1 - WIGHT	$400.00	13999-1 - PPP COTTAGE#2 & 3-CANCELLATION
			Check Total	$400.00	
08/31/26	223128	ZHUZHA, NATALIA	15831 - ZHUZHA	$100.00	15831 - HERSCHEL KING PARK PAVILION
			Check Total	$100.00	
08/31/26	223129	RENTALS TO GO OF FL, LLC	0002121513	$300.00	PORTABLE TOLIET RENTAL- RIVER TO SEA REST REPAIRS
			Check Total	$300.00	
08/31/26	223130	RING POWER CORPORATION	00WC1588942	$5,110.54	EQUIPMENT PARTS AND REPAIRS - 734
08/31/26	223130	RING POWER CORPORATION	00WC1591089	$2,308.14	EQUIPMENT PARTS AND REPAIRS - 9897
08/31/26	223130	RING POWER CORPORATION	18WE1591090	$4,139.07	COOLANT FLUSH AND FILL - EOC GENERATOR #1
			Check Total	$11,557.75	
08/31/26	223131	ROBERT M. PERRY, ESQUIRE, LLC	VAB 2025-2026	$8,500.00	LEGAL SERVICES FOR VAB - 04.09.2025-03.10.2026

Flagler County Board of County Commissioners - Disbursement Report Required per F.S. 136.06
Invoices Processed for period 08/29/26 to 09/04/26

Check Date	Check #	Vendor Name	Invoice #	Net Trans Amt	Description
			Check Total	$8,500.00	
08/31/26	223132	SAUER CONSTRUCTION, LLC	PAY APP NO.15	$778,000.00	CONSTRUCTION OF NEW AIRPOT TER
			Check Total	$778,000.00	
08/31/26	223133	STANDARD INSURANCE COMPANY	08072026	$6,926.19	Payroll Run 1 - Warrant 260807
08/31/26	223133	STANDARD INSURANCE COMPANY	081426	$6,939.71	Payroll Run 1 - Warrant 260814
08/31/26	223133	STANDARD INSURANCE COMPANY	08212026	$6,937.34	Payroll Run 1 - Warrant 260821
08/31/26	223133	STANDARD INSURANCE COMPANY	082826	$6,906.06	Payroll Run 1 - Warrant 260828
			Check Total	$27,709.30	
08/31/26	223134	STRYKER MEDICAL	9213289699	$120.64	AED Wall Signs x4
			Check Total	$120.64	
08/31/26	223135	SUNBELT RENTALS INC.	185500518-0002	$512.75	DRUM ROLLER RENTAL - FACILITIES
			Check Total	$512.75	
08/31/26	223136	SUNOCO LP	60868683	$27,473.68	BULK FUEL
			Check Total	$27,473.68	
08/31/26	223137	SW ELEVATORS, LLC	91872	$1,615.00	INV#91872 - SEPT ELEVATOR MAINTENANCE - 9.1.26
			Check Total	$1,615.00	
08/31/26	223138	TEN-8 FIRE EQUIPMENT, INC	1310102187	$567.10	Helmet Front Frame Only x10
08/31/26	223138	TEN-8 FIRE EQUIPMENT, INC	1310113910	$6,134.62	E52 Repair
			Check Total	$6,701.72	
08/31/26	223139	TURK, TRACY	08-18-2026	$375.00	EDO FCIDA BOARD TRAINING
			Check Total	$375.00	
08/31/26	223140	TYLER TECHNOLOGIES, INC	130-165860	$997.68	In person Training EMD
			Check Total	$997.68	
08/31/26	223141	ULINE, INC.	211868128	$422.45	Purchase of New Office Chair
			Check Total	$422.45	
08/31/26	223142	VESTIS UNIFORMS AND WORKPLACE SUPPLIES, INC	5640553188	$12.84	UNIFORMS WITH RELATED PRODUCTS
08/31/26	223142	VESTIS UNIFORMS AND WORKPLACE SUPPLIES, INC	5640555575	$8.64	UNIFORMS WITH RELATED PRODUCTS

Flagler County Board of County Commissioners - Disbursement Report Required per F.S. 136.06
Invoices Processed for period 08/29/26 to 09/04/26

Check Date	Check #	Vendor Name	Invoice #	Net Trans Amt	Description
08/31/26	223142	VESTIS UNIFORMS AND WORKPLACE SUPPLIES, INC	5640563314	$12.44	UNIFORMS WITH RELATED PRODUCTS
08/31/26	223142	VESTIS UNIFORMS AND WORKPLACE SUPPLIES, INC	5640565198	$8.94	UNIFORMS WITH RELATED PRODUCTS
08/31/26	223142	VESTIS UNIFORMS AND WORKPLACE SUPPLIES, INC	5640567628	$12.44	UNIFORMS WITH RELATED PRODUCTS
08/31/26	223142	VESTIS UNIFORMS AND WORKPLACE SUPPLIES, INC	5640570046	$12.44	UNIFORMS WITH RELATED PRODUCTS
08/31/26	223142	VESTIS UNIFORMS AND WORKPLACE SUPPLIES, INC	5640572480	$8.24	UNIFORMS WITH RELATED PRODUCTS
08/31/26	223142	VESTIS UNIFORMS AND WORKPLACE SUPPLIES, INC	5640575376	$8.24	UNIFORMS WITH RELATED PRODUCTS
08/31/26	223142	VESTIS UNIFORMS AND WORKPLACE SUPPLIES, INC	5640577261	$8.24	UNIFORMS WITH RELATED PRODUCTS
08/31/26	223142	VESTIS UNIFORMS AND WORKPLACE SUPPLIES, INC	5640579633	$8.94	UNIFORMS WITH RELATED PRODUCTS
08/31/26	223142	VESTIS UNIFORMS AND WORKPLACE SUPPLIES, INC	5640579634	$32.56	UNIFORM RENTALS - LANDFILL - 08.04.26
08/31/26	223142	VESTIS UNIFORMS AND WORKPLACE SUPPLIES, INC	5640581542	$119.23	UNIFORM RENTALS - FACILITIES - 08.07.26
08/31/26	223142	VESTIS UNIFORMS AND WORKPLACE SUPPLIES, INC	5640581543	$105.65	UNIFORM RENTALS - TRANSPORTATION -08.07.26
08/31/26	223142	VESTIS UNIFORMS AND WORKPLACE SUPPLIES, INC	5640581545	$12.17	UNIFORM RENTALS - ADMIN - 08.07.26
08/31/26	223142	VESTIS UNIFORMS AND WORKPLACE SUPPLIES, INC	5640581546	$64.88	UNIFORM RENTALS - FLEET - 08.07.26
08/31/26	223142	VESTIS UNIFORMS AND WORKPLACE SUPPLIES, INC	5640581547	$79.17	UNIFORM RENTALS - PARKS/PRINCESS PLACE - 08.07.26
08/31/26	223142	VESTIS UNIFORMS AND WORKPLACE SUPPLIES, INC	5640582030	$8.24	UNIFORMS WITH RELATED PRODUCTS
08/31/26	223142	VESTIS UNIFORMS AND WORKPLACE SUPPLIES, INC	5640582031	$32.56	UNIFORM RENTALS - LANDFILL - 08.11.26
08/31/26	223142	VESTIS UNIFORMS AND WORKPLACE SUPPLIES, INC	5640584903	$11.70	UNIFORMS WITH RELATED PRODUCTS

Flagler County Board of County Commissioners - Disbursement Report Required per F.S. 136.06
Invoices Processed for period 08/29/26 to 09/04/26

Check Date	Check #	Vendor Name	Invoice #	Net Trans Amt	Description
08/31/26	223142	VESTIS UNIFORMS AND WORKPLACE SUPPLIES, INC	5640586769	$8.73	UNIFORMS WITH RELATED PRODUCTS
			Check Total	$576.29	
08/31/26	223143	VESTIS UNIFORMS AND WORKPLACE SUPPLIES, INC	5640558537	$7.20	UNIFORMS WITH RELATED PRODUCTS
08/31/26	223143	VESTIS UNIFORMS AND WORKPLACE SUPPLIES, INC	5640581558	$5.46	UNIFORM RENTALS - PURCHASING - 08.07.26
			Check Total	$12.66	
08/31/26	223144	VILLAGE KEY AND ALARM	424694	$87.00	Inv#424694 - General Serv - Service Call - 8/26/26
08/31/26	223144	VILLAGE KEY AND ALARM	424711	$174.00	Inv#424711 - Expo Hall - Service Call - 8/26/26
			Check Total	$261.00	
08/31/26	223145	VIRTUAL HOMES REALTY	RO RO02144	$1,500.00	EA Assist [redacted] Place
			Check Total	$1,500.00	
08/31/26	223146	W.W. GRAINGER, INC	9042174459	$110.34	FIRST AID KIT, PLASTIC 480F94
			Check Total	$110.34	
08/31/26	223147	WASTE MANAGEMENT INC. OF FLORIDA	0001762-4636-1	$350.84	LANDFILL TIPPING FEES-FACILITIES & PARKS
08/31/26	223147	WASTE MANAGEMENT INC. OF FLORIDA	0001782-4636-9	$156.71	LANDFILL TIPPING FEES-R & B
08/31/26	223147	WASTE MANAGEMENT INC. OF FLORIDA	0001926-4636-2	$37.41	LANDFILL TIPPING FEES-R & B
08/31/26	223147	WASTE MANAGEMENT INC. OF FLORIDA	0001934-4636-6	$37.41	LANDFILL TIPPING FEES-FACILITIES
			Check Total	$582.37	
08/31/26	223148	WITMER PUBLIC SAFETY GROUP	INV947531	$855.72	Fire PPE - Boots
08/31/26	223148	WITMER PUBLIC SAFETY GROUP	INV951324	$333.87	Entry Tool & Pick Axe
			Check Total	$1,189.59	
08/31/26	223149	YELLOWSTONE LANDSCAPE	1248517	$2,250.00	Inv1248517 -Landscape Services-Nexus Center- 09.26
			Check Total	$2,250.00	
08/31/26	223150	ZOLL MEDICAL CORPPRATION	4545977	$1,381.80	CRITICAL CARE AND EMS EQUIPMENT
			Check Total	$1,381.80	
			Report Total	**$6,871,963.16**	

Flagler County Board of County Commissioners - Disbursement Report Required per F.S. 136.06
Invoices Processed for period 08/29/26 to 09/04/26

Invoice Date	Card #	Vendor Name	Invoice #	Net Trans Amt	Description
08/31/26	0413	GLOBAL EQUIPMENT COMPANY INC	TXN00151784	$521.92	TXN00151784- CASTER WHEELS- BULL CREEK RESTAURANT
08/31/26	0413	AMZN Mktp US	TXN00151896	$56.99	TXN00151896 - KEYBOARD TRAY MOUNT - OFFICE EQUIPME
			Card Total	$578.91	
08/31/26	0509	TOM NEHL TRUCK	TXN00151841	$289.76	TXN00151841 - PARTS TO REPAIR TRUCK 9626
08/31/26	0509	AMZN Mktp US	TXN00151893	$28.98	TXN00151893 - PARTS TO REPAIR JOHN DEERE 10653 - P
			Card Total	$318.74	
08/31/26	1044	ODP BUSINESS SOLUTIONS	TXN00151788	$1,241.58	TXN00151788 - Plotter Printhead Cartridge
08/31/26	1044	AUTOPAY/DISH NTWK	TXN00151925	$48.13	TXN00151925 - Monthly Satellite Video Service
			Card Total	$1,289.71	
08/31/26	1199	DG HARDWARE.	TXN00151930	$37.48	TXN00151930 - SCREWS & WASHERS / EPOXY
			Card Total	$37.48	
06/15/26	1209	OMNI HOTELS	TXN00150214	$768.90	TXN00150214- LODGING EXPENSES FOR PRIMA CONFERENCE
			Card Total	$768.90	
08/31/26	1407	LOWES #02241	TXN00151836	$106.68	TXN00151836-DEADBOLT & DOOR KNOBS, SCREW ANCHORS &
08/31/26	1407	M&S HARDWARE HAY AND FEED	TXN00151923	$16.33	TXN00151923-VACUUM BREAKER-BULL CREEK-FACILITIES
			Card Total	$123.01	
08/31/26	1700	LOWE'S HOME CENTERS, LLC	TXN00151862	$166.96	TXN00151862-LUMBER- PAINT-SCREWS- BULL CREEK RESTA
08/31/26	1700	M&S HARDWARE HAY AND FEED	TXN00151935	$5.42	TXN00151935-CONDUIT TRUCK 2827- FACILITIES
			Card Total	$172.38	
08/17/26	1746	EVERBRITE	TXN00151482	$192.61	TXN00151482-WADSWORTH PARK-BATTERY & MOUNT FOR SCO

Flagler County Board of County Commissioners - Disbursement Report Required per F.S. 136.06
Invoices Processed for period 08/29/26 to 09/04/26

Invoice Date	Card #	Vendor Name	Invoice #	Net Trans Amt	Description
08/24/26	1746	DG HARDWARE.	TXN00151676	$23.10	TXN00151676 - PARKS - TRUCK#5827 - TOOLS & PAINTIN
			Card Total	$215.71	
08/24/26	1986	FLAGLER POWER EQUIPMENT	TXN00151647	$111.05	TXN00151647 - PPP - REPLACEMENT LAWN MOWER BLADES
			Card Total	$111.05	
08/31/26	2221	MYPILOTSTORE.COM	TXN00151873	$30.60	TXN00151873 Charts & Maps Subscriptions
			Card Total	$30.60	
08/24/26	2539	AMZN Mktp US	TXN00151627	$265.60	TXN00151627 (Office chair purchased for PC Library
08/24/26	2539	USPS.COM CLICKNSHIP	TXN00151652	$9.57	TXN00151652 (Shipping charges to send passport app
08/24/26	2539	USPS.COM CLICKNSHIP	TXN00151688	$19.14	TXN00151688 (Shipping charges to send passport app
08/24/26	2539	USPS.COM CLICKNSHIP	TXN00151700	$19.14	TXN00151700 (Shipping charges to send passport app
08/24/26	2539	USPS.COM CLICKNSHIP	TXN00151718	$9.57	TXN00151718 (Shipping charges to send passport app
08/24/26	2539	AMZN Mktp US	TXN00151739	$314.90	TXN00151739 (Office Chair for Palm Coast Library)
08/24/26	2539	AMZN Mktp US	TXN00151753	$149.99	TXN00151753 (Office Chair for Palm Coast Library)
08/24/26	2539	ULINE SHIP SUPPLIES	TXN00151755	$447.30	TXN00151755 (Office chair for Palm Coast Library c
08/31/26	2539	USPS.COM CLICKNSHIP	TXN00151761	$19.14	TXN00151761 (Shipping charges to send passport app
08/31/26	2539	USPS.COM CLICKNSHIP	TXN00151854	$9.57	TXN00151854 (Shipping charges to send passport app
08/31/26	2539	AMZN Mktp US	TXN00151856	$1,087.57	TXN00151856 (Purchase of Office chairs for Palm Co

Flagler County Board of County Commissioners - Disbursement Report Required per F.S. 136.06
Invoices Processed for period 08/29/26 to 09/04/26

Invoice Date	Card #	Vendor Name	Invoice #	Net Trans Amt	Description
08/31/26	2539	USPS.COM CLICKNSHIP	TXN00151867	$9.57	TXN00151867 (Shipping charges to send passport app
08/31/26	2539	ULINE SHIP SUPPLIES	TXN00151892	($24.85)	TXN00151892 (Refund of taxes, Original TXN00151755
08/31/26	2539	USPS.COM CLICKNSHIP	TXN00151902	$9.57	TXN00151902 (Shipping charges to send passport app
08/31/26	2539	USPS.COM CLICKNSHIP	TXN00151926	$19.14	TXN00151926 (Shipping charges to send passport app
08/31/26	2539	USPS.COM CLICKNSHIP	TXN00151940	$9.57	TXN00151940 (Shipping charges to send passport app
			Card Total	$2,374.49	
08/24/26	2974	TRACTOR SUPPLY CO	TXN00151716	$73.92	TXN00151716 - LM - AMMO FOR HOG TRAPPING - TRACTOR
			Card Total	$73.92	
07/27/26	2980	DG HARDWARE.	TXN00151059	$9.16	TXN00151059-TOILET BOWL BRUSH & TOILET BOWL CLEANE
07/27/26	2980	DG HARDWARE.	TXN00151079	$26.61	TXN00151079-LED LIGHT BULBS-PRINCESS PLACE-FACILIT
07/27/26	2980	THE SHERWIN-WILLIAMS COMPANY	TXN00151129	$115.40	TXN00151129-PAINT-JUSTICE CENTER-FACILITIES
07/27/26	2980	LOWES #02241	TXN00151143	$284.34	TXN00151143-PAINT, ACETONE, PAINT PAIL, ROLLER COV
08/03/26	2980	DG HARDWARE.	TXN00151183	$25.19	TXN00151183-9 PC IMPACT DRIVER BIT SET-TRUCK #7935
08/03/26	2980	DG HARDWARE.	TXN00151192	$9.17	TXN00151192-WEATHERSTRIP WAS RETURNED, THE CREDIT
08/03/26	2980	DG HARDWARE.	TXN00151204	$0.63	TXN00151204-FASTENERS-CARVER GYM-FACILITIES
08/03/26	2980	DG HARDWARE.	TXN00151218	($2.20)	TXN00151218-CREDIT TO ORIGINAL TXN 00151192
08/03/26	2980	DG HARDWARE.	TXN00151220	$65.65	TXN00151220-DEADBOLT & BLANK BUILDING KEYS-CARVER
08/03/26	2980	LOWES #02241	TXN00151229	$63.88	TXN00151229-ITEMS WERE RETURNED, THE CREDIT TXN #

Flagler County Board of County Commissioners - Disbursement Report Required per F.S. 136.06
Invoices Processed for period 08/29/26 to 09/04/26

Invoice Date	Card #	Vendor Name	Invoice #	Net Trans Amt	Description
08/03/26	2980	LOWES #02241	TXN00151247	$30.40	TXN00151247-PVC PIPE & PVC CEMENT & PRIMER-PRINCES
08/03/26	2980	LOWES #02241	TXN00151297	$53.58	TXN00151297-PAINT-RIVER TO SEA-FACILITIES
08/10/26	2980	DG HARDWARE.	TXN00151314	$23.29	TXN00151314-LIQUID CHLORINE-PRINCESS PLACE-FACILIT
08/10/26	2980	LOWES #02241	TXN00151323	($63.88)	TXN00151323-CREDIT TO ORIGINAL TXN 00151229
08/10/26	2980	LOWES #02241	TXN00151358	$79.70	TXN00151358-CHIP BRUSHES, ADHESIVE REM, SANDPAPER,
08/10/26	2980	HAMMOCK HARDWARE AND SUPP	TXN00151386	$22.75	TXN00151386-EXTENSION CORD-RIVER TO SEA PRESERVE-F
08/10/26	2980	DG HARDWARE.	TXN00151391	$31.19	TXN00151391-PAINT BRUSH SET-TRUCK #7935-FACILITIES
08/10/26	2980	HAMMOCK HARDWARE AND SUPP	TXN00151411	$6.19	TXN00151411-SANDING DISC-RIVER TO SEA PRESERVE-FAC
08/10/26	2980	LOWES #02241	TXN00151428	$10.98	TXN00151428-80 GRIT SANDPAPER-RIVER TO SEA-FACILIT
08/17/26	2980	HAMMOCK HARDWARE AND SUPP	TXN00151466	$18.60	TXN00151466-LIQUID CHLORINE-RIVER TO SEA PRESERVE-
08/17/26	2980	LOWES #02241	TXN00151571	$450.74	TXN00151571-PAINT & PAINT ROLLER COVERS-INMATE FAC
08/17/26	2980	SHERWIN-WILLIAMS725221	TXN00151603	$125.90	TXN00151603-PAINT-RIVER TO SEA PRESERVE-FACILITIES
08/17/26	2980	LOWES #02241	TXN00151614	$23.98	TXN00151614-CONCRETE STAIN-RIVER TO SEA PRESERVE-F
08/24/26	2980	HAMMOCK HARDWARE AND SUPP	TXN00151617	$9.09	TXN00151617-C2 BATTERY-RIVER TO SEA-FACILITIES
08/24/26	2980	DG HARDWARE.	TXN00151655	$22.54	TXN00151655-WIRE CONNECTORS & GORILLA GLUE-HOLDEN
08/24/26	2980	LOWES #02241	TXN00151656	$31.48	TXN00151656-ENTRY DOOR HANDLE-RIVER TO SEA-FACILIT
08/24/26	2980	DG HARDWARE.	TXN00151672	$12.47	TXN00151672-9 VOLT & AA BATTERIES-PRINCESS PLACE-F

Flagler County Board of County Commissioners - Disbursement Report Required per F.S. 136.06
Invoices Processed for period 08/29/26 to 09/04/26

Invoice Date	Card #	Vendor Name	Invoice #	Net Trans Amt	Description
08/24/26	2980	DG HARDWARE.	TXN00151697	$12.84	TXN00151697-LED BULBS-HOLDEN HOUSE-FACILITIES
08/24/26	2980	DG HARDWARE.	TXN00151714	$6.97	TXN00151714-WINDOW SEALANT-HOLDEN HOUSE-FACILITIES
08/24/26	2980	HAMMOCK HARDWARE AND SUPP	TXN00151729	$12.39	TXN00151729-9" PAINT ROLLER & EMPTY PAINT CAN-TRUC
08/24/26	2980	DG HARDWARE.	TXN00151741	$4.21	TXN00151741-FINISHING NAILS-HOLDEN HOUSE-FACILITIE
08/31/26	2980	SHERWIN-WILLIAMS725221	TXN00151775	$51.27	TXN00151775-DECO FLAKES-BULL CREEK-FACILITIES
08/31/26	2980	HAMMOCK HARDWARE AND SUPP	TXN00151791	$11.42	TXN00151791-ANCHORS, ZINC SCREWS, SCREWS & LUMBER-
08/31/26	2980	LOWES #02241	TXN00151847	$108.02	TXN00151847-ROLLER COVERS, TRIM BRUSH, ANCHORS, RO
			Card Total	$1,693.95	
08/31/26	3573	DG HARDWARE.	TXN00151890	$42.16	TXN00151890-PAINT ROLLER COVER, ROLLER FRAME, 3 IN
08/31/26	3573	DG HARDWARE.	TXN00151901	$46.79	TXN00151901-6 IN JOINT KNIFE, PUTTY KNIFE, SPACKIN
08/31/26	3573	THE SHERWIN-WILLIAMS COMPANY	TXN00151919	$76.67	TXN00151919-PAINT-GENERAL SERVICES BUILDING #5-FAC
08/31/26	3573	LOWES #02241	TXN00151933	$40.46	TXN00151933-2 IN REUSABLE CRAFT BRUSH & FLOORING I
			Card Total	$206.08	
08/10/26	3710	AMZN Mktp US	TXN00151381	$27.49	TXN00151381-SAFETY HARNESS LANYARD-GSB-FACILITIES
08/10/26	3710	AMZN Mktp US	TXN00151424	$87.20	TXN00151424-AMAZON CANCELLED THE ORDER, THE CREDIT
08/17/26	3710	AMZN Mktp US	TXN00151447	$66.67	TXN00151447-SAFETY HARNESS-GSB-FACILITIES
08/17/26	3710	AMZN Mktp US	TXN00151474	($87.20)	TXN00151474-CREDIT TO ORIGINAL TXN 00151424
08/17/26	3710	PUBLIX #1138	TXN00151508	$34.74	TXN00151508-MONEY WAS DEPOSITED WITH THE CLERKS OF

Flagler County Board of County Commissioners - Disbursement Report Required per F.S. 136.06
Invoices Processed for period 08/29/26 to 09/04/26

Invoice Date	Card #	Vendor Name	Invoice #	Net Trans Amt	Description
08/17/26	3710	AMZN Mktp US	TXN00151534	$338.00	TXN00151534-MORTISE LOCKSET-JUSTICE CENTER-FACILIT
08/17/26	3710	SQ COASTAL LOCK SERVICE	TXN00151584	$125.00	TXN00151584-LOCK REPAIR-EOC-FACILITIES
08/31/26	3710	THE HOME DEPOT PRO - SUPPLY WORKS	TXN00151777	$328.97	TXN00151777-9 PC OSCILLATING BLADE SET & OSCILLATI
08/31/26	3710	THE HOME DEPOT PRO - SUPPLY WORKS	TXN00151800	$50.41	TXN00151800-1/2 IN X 4 X 6 CARBIDE HAMMER DRILL BI
08/31/26	3710	AMZN Mktp US	TXN00151910	$28.49	TXN00151910-OIL ABSORBENT PADS-BAPTIST ACADEMY-FAC
			Card Total	$999.77	
08/31/26	3769	SPIDER TRACKS	TXN00151766	$132.00	TXN00151766 In-Flight Tracking
08/31/26	3769	SPIDER TRACKS	TXN00151785	$139.00	TXN00151785 In-Flight Tracking
08/31/26	3769	INTERNATIONAL TRANSACTION	TXN00151799	$1.39	TXN00151799 International Fee - for TXN00151785
			Card Total	$272.39	
08/24/26	3973	LOWES #02241	TXN00151725	$171.80	TXN00151725 - PPP - PICNIC TABLE HARDWARE REPAIRS
08/24/26	3973	LOWES #02241	TXN00151750	$136.60	TXN00151750 - PPP - PICNIC TABLE LUMBER REAPIR - L
			Card Total	$308.40	
08/24/26	4072	USPS.COM CLICKNSHIP	TXN00151620	$19.14	TXN00151620 (Shipping charges to send passport app
08/24/26	4072	USPS.COM CLICKNSHIP	TXN00151636	$19.14	TXN00151636 (Shipping charges to send passport app
08/24/26	4072	USPS.COM CLICKNSHIP	TXN00151715	$19.14	TXN00151715 (Shipping charges to send passport app
08/24/26	4072	USPS.COM CLICKNSHIP	TXN00151745	$19.14	TXN00151745 (Shipping charges to send passport app
08/31/26	4072	USPS.COM CLICKNSHIP	TXN00151765	$19.14	TXN00151765 (Shipping charges to send passport app

Flagler County Board of County Commissioners - Disbursement Report Required per F.S. 136.06
Invoices Processed for period 08/29/26 to 09/04/26

Invoice Date	Card #	Vendor Name	Invoice #	Net Trans Amt	Description
08/31/26	4072	USPS.COM CLICKNSHIP	TXN00151882	$19.14	TXN00151882 (Shipping charges to send passport app
			Card Total	$114.84	
08/31/26	4403	DG HARDWARE.	TXN00151916	$26.99	TXN00151916 - CHECK VALVE - PRINCESS PLACE SEPTIC
			Card Total	$26.99	
08/31/26	4413	B434 UNITED REFRIGERATION	TXN00151792	$128.32	TXN00151792 - HVAC COMPONENTS - BULL CREEK RESTAUR
			Card Total	$128.32	
08/31/26	4480	VISTAPRINT	TXN00151843	$139.95	TXN00151843- BUSINESS CARDS FOR FIRE RESCUE, GROWT
			Card Total	$139.95	
08/31/26	4663	Flagler Tiger Bay Club	TXN00151796	$200.00	TXN00151796 - Flagler Tiger Bay Club Membership Re
			Card Total	$200.00	
08/31/26	5442	AMZN Mktp US	TXN00151898	$1,900.00	TXN00151898 - TRANSMISSION FLUSH MACHINE-FLEET
			Card Total	$1,900.00	
08/31/26	5708	BJS WHOLESALE	TXN00151769	$19.95	TXN00151769 PILOT LOUNGE SUPPLIES
			Card Total	$19.95	
08/24/26	6074	AMZN Mktp US	TXN00151668	$88.95	TXN00151668 - WALL VENT - FACILITIES
08/24/26	6074	COMFORTSIDE LLC	TXN00151681	$197.50	TXN00151681 - HVAC CONTROL BOARD - BULL CREEK REST
08/24/26	6074	CE FLORIDA 2503	TXN00151682	$268.42	TXN00151682 - HVAC CONTROL BOARD - REPAIRS - INMAT
08/24/26	6074	CE FLORIDA 2503	TXN00151695	$80.32	TXN00151695 - HVAC REPAIRS- HEALTH DEPT - FACILIT
08/24/26	6074	HARBOR FREIGHT	TXN00151756	$569.99	TXN00151756 - AIR COMPRESSOR - ENERGY PLANT

Flagler County Board of County Commissioners - Disbursement Report Required per F.S. 136.06
Invoices Processed for period 08/29/26 to 09/04/26

Invoice Date	Card #	Vendor Name	Invoice #	Net Trans Amt	Description
			Card Total	$1,205.18	
08/17/26	6350	MICROSOFT#G176991920	TXN00151454	$145.08	TXN00151454 - Azure usage 07/01/26 - 07/31/26
08/17/26	6350	JetBrains Americas INC	TXN00151465	$198.56	TXN00151465 PyCharm Pro 08/05/26 - 08/04/29
			Card Total	$343.64	
08/31/26	6462	MailChimp	TXN00151877	$410.00	TXN00151877 TDO MONTHLY SUBSCRIPTION
08/31/26	6462	USPS.COM PICKUP ON DEMAND	TXN00151905	$26.50	TXN00151905 TDO VISITOR GUIDE PICKUP
08/31/26	6462	STAMPS.COM	TXN00151917	$100.00	TXN00151917 TDO POSTAGE FOR VISITOR GUIDE
08/31/26	6462	STAMPS.COM	TXN00151934	$100.00	TXN00151934 TDO POSTAGE FOR VISITOR GUIDE
08/31/26	6462	AMAZON RETA	TXN00151936	$76.74	TXN00151936 EDO OFFICE SUPPLY
			Card Total	$713.24	
08/03/26	6614	LOWES #02241	TXN00151212	$52.94	TXN00151212-TOGGLE BOLT ANCHORS WITH SCREWS-SHERIF
08/03/26	6614	DG HARDWARE.	TXN00151226	$36.25	TXN00151226-FLAPPER & TOILET FILL VALVE-GENERAL SE
08/03/26	6614	LOWES #02241	TXN00151239	$21.98	TXN00151239-FAUCET HANDLES-FLEET SHOP BUILDING #11
			Card Total	$111.17	
07/13/26	6649	NIC -FDLE CAPS	TXN00150729	$36.00	TXN00150729- VOLUNTEER BACKGROUND [redacted]
07/13/26	6649	NIC -FDLE CAPS	TXN00150746	$36.00	TXN00150746- VOLUNTEER BACKGROUND [redacted]
07/13/26	6649	NIC -FDLE CAPS	TXN00150766	$36.00	TXN00150766- VOLUNTEER BACKGROUND [redacted]
07/13/26	6649	NIC -FDLE CAPS	TXN00150769	$36.00	TXN00150769- VOLUNTEER BACKGROUND [redacted]
			Card Total	$144.00	

Flagler County Board of County Commissioners - Disbursement Report Required per F.S. 136.06
Invoices Processed for period 08/29/26 to 09/04/26

Invoice Date	Card #	Vendor Name	Invoice #	Net Trans Amt	Description
08/17/26	6689	AMZN Mktp US	TXN00151533	$44.40	TXN00151533 - PENS
			Card Total	$44.40	
08/24/26	6694	TRACTOR SUPPLY	TXN00151667	$114.38	TXN00151667 - LM - HOG ATTACTANTS FOR TRAPPING & R
08/24/26	6694	DG HARDWARE.	TXN00151747	$37.13	TXN00151747 - LM - CHAINSAW REPAIR - ACE HARDWARE
			Card Total	$151.51	
08/31/26	6980	LOWES #02241	TXN00151846	$14.36	TXN00151846-STRAIGHT PLUGS-STATION #50-FACILITIES
08/31/26	6980	DG HARDWARE.	TXN00151859	$70.16	TXN00151859-STRAIGHT BLADE CONNECTOR(ST #50) & DRA
08/31/26	6980	DG HARDWARE.	TXN00151870	$15.77	TXN00151870-FASTENERS-JUSTICE CENTER-FACILITIES
08/31/26	6980	LOWES #02241	TXN00151894	$115.70	TXN00151894-PAINT, PAINT ROLLER KIT, PAINT BRUSHES
08/31/26	6980	DG HARDWARE.	TXN00151914	$63.30	TXN00151914-CLEAN OUT PLUGS, BOWL GASKET (HEALTH &
			Card Total	$279.29	
07/13/26	7301	LOWES #02241	TXN00150708	$34.96	TXN00150708-PVC PIPE & COUPLING, PVC ADAPTER & PVC
07/13/26	7301	LOWES #02241	TXN00150719	$58.84	TXN00150719-PVC ELBOW BUSHING COUPLING, PVC TEE, M
07/13/26	7301	DG HARDWARE.	TXN00150779	$12.83	TXN00150779-DUST PAN, POLY WASHER & SLIPJOINT NUT-
07/13/26	7301	DG HARDWARE.	TXN00150790	$30.31	TXN00150790-SINK DRAIN, CAULK, FAUCET SUPPLY LINE
07/13/26	7301	OCEANS FENCE	TXN00150794	$195.70	TXN00150794-REAR TRACK WHEELS-GATE AT LANDFILL-FAC
07/13/26	7301	LOWES #02241	TXN00150839	$35.00	TXN00150839-CONDUIT-FIRE STATION #31-FACILITIES

Flagler County Board of County Commissioners - Disbursement Report Required per F.S. 136.06
Invoices Processed for period 08/29/26 to 09/04/26

Invoice Date	Card #	Vendor Name	Invoice #	Net Trans Amt	Description
08/17/26	7301	DG HARDWARE.	TXN00151464	$39.08	TXN00151464-5 GAL BUCKET & HOLE SAW KIT-TK #7938-F
08/17/26	7301	LOWES #02241	TXN00151504	$75.94	TXN00151504-FAUCET SUPPLY LINE & KITCHEN FAUCET-ST
08/17/26	7301	LOWES #02241	TXN00151537	$12.98	TXN00151537-WOMENS RR SIGN-WADSWORTH PARK-FACILITI
08/17/26	7301	LOWES #02241	TXN00151588	$76.90	TXN00151588-PLYWOOD SHEATHING & 2 IN MULTIPURPOSE
08/31/26	7301	DG HARDWARE.	TXN00151772	$53.77	TXN00151772-SCREW ANCHORS, 3/4 X 6 IN DRILL BIT &
08/31/26	7301	LOWES #02241	TXN00151852	$20.18	TXN00151852-CIRCUIT BREAKER, ELECT BOX COVERS & DU
			Card Total	$646.49	
08/24/26	7349	AMZN Mktp US	TXN00151638	$205.48	TXN00151638 (Tablecloths for Nexus Center, Teapar
08/24/26	7349	AMZN Mktp US	TXN00151719	$65.04	TXN00151719 (Display rails for Bunnell Library)
08/24/26	7349	AMZN Mktp US	TXN00151726	$65.04	TXN00151726 (Display rails for Bunnell Library)
08/24/26	7349	AMZN Mktp US	TXN00151736	$86.18	TXN00151736 (Teaparty cupcake decor for Bunnell Li
			Card Total	$421.74	
08/31/26	8004	Amazon.com 5O3121BZ1	TXN00151866	$31.98	TXN00151866 Batteries
08/31/26	8004	CULLIGAN WATER	TXN00151887	$124.10	TXN00151887 Sept 2026 St 31 Rental Softener & Auto
08/31/26	8004	CULLIGAN WATER	TXN00151889	$25.00	TXN00151889 Sept 2026 St 57 Rental Filter (Inv CD9
08/31/26	8004	CULLIGAN WATER	TXN00151904	$99.00	TXN00151904 Sept 2026 St 57 Rental Softener (Inv C
08/31/26	8004	Amazon.com 5O01R3D80	TXN00151908	$71.92	TXN00151908 Laundry Detergent x4
08/31/26	8004	CULLIGAN WATER	TXN00151913	$112.20	TXN00151913 Sept 2026 St 58 Rental Softener (Inv C

Flagler County Board of County Commissioners - Disbursement Report Required per F.S. 136.06
Invoices Processed for period 08/29/26 to 09/04/26

Invoice Date	Card #	Vendor Name	Invoice #	Net Trans Amt	Description
08/31/26	8004	CULLIGAN WATER	TXN00151915	$54.40	TXN00151915 Sept 2026 St 51 Rental Softener (Inv C
08/31/26	8004	CULLIGAN WATER	TXN00151922	$51.50	TXN00151922 Sept 2026 St 58 Rental RO (Inv CD98596
08/31/26	8004	CULLIGAN WATER	TXN00151931	$134.85	TXN00151931 Sept 2026 St 58 Rental Filter (Inv CD9
			Card Total	$704.95	
08/31/26	8097	ANTHROPIC CLAUDE TEAM	TXN00151780	$473.94	TXN00151780 Claude Addition 08/21/26 - 02/17/27
			Card Total	$473.94	
08/03/26	8288	AMZN Mktp US	TXN00151227	$78.05	TXN00151227 (Office Supplies and Cork Board)
			Card Total	$78.05	
08/17/26	8486	AMZN Mktp US	TXN00151597	$58.74	TXN00151597 AMAZON CODE ENF GRADE STICKS
08/24/26	8486	AMZN Mktp US	TXN00151650	$95.37	TXN00151650 AMAZON CONSUMED ITEMS PLNG
08/31/26	8486	SQ JP TINTING AND DETAIL	TXN00151858	$220.00	TXN00151858 JP TINT TRUCK 11228 -BLDG
			Card Total	$374.11	
08/17/26	8653	VMO VIMEO.COM	TXN00151475	$300.00	TXN00151475 TDO VIMEO SUBSCRIPTION REFUND ON TXN00
08/31/26	8653	VMO VIMEO.COM	TXN00151842	($300.00)	TXN00151842 TDO SUBSCRIPTION REFUND FROM TXN001514
			Card Total	$0.00	
08/03/26	9175	HAMMOCK HARDWARE AND SUPP	TXN00151232	$9.63	TXN00151232-BUSHING, MALE ADAPTER & PVC 90-OLD SAL
08/03/26	9175	LOWES #02241	TXN00151252	$111.01	TXN00151252-COUPLING, MALE PLUG, PVC TEE, BUSHING
08/03/26	9175	HAMMOCK HARDWARE AND SUPP	TXN00151255	$28.83	TXN00151255-HOSE COUPLING, FITTING, BUSHING-OLD SA
08/03/26	9175	HAMMOCK HARDWARE AND SUPP	TXN00151275	$14.43	TXN00151275-PVC UNION & COUPLING-OLD SALT PARK-FAC

Flagler County Board of County Commissioners - Disbursement Report Required per F.S. 136.06
Invoices Processed for period 08/29/26 to 09/04/26

Invoice Date	Card #	Vendor Name	Invoice #	Net Trans Amt	Description
08/03/26	9175	LOWES #02241	TXN00151293	$79.46	TXN00151293-FENDER WASHERS & DOOR KNOBS-OLD SALT P
08/17/26	9175	HAMMOCK HARDWARE AND SUPP	TXN00151510	$14.77	TXN00151510-ELECTRICAL BOX COVER(STATION #41) & TO
08/17/26	9175	HAMMOCK HARDWARE AND SUPP	TXN00151543	$20.68	TXN00151543-GFCI OUTLET-STATION #41-FACILITIES
08/17/26	9175	LOWES #02241	TXN00151574	$71.97	TXN00151574-PVC CONNECTOR, CLAMP, BOX COVERS, COND
08/17/26	9175	HAMMOCK HARDWARE AND SUPP	TXN00151586	$48.36	TXN00151586-PVC UNIONS & COUPLINGS-BINGS LANDING-F
08/31/26	9175	LOWES #02241	TXN00151840	$87.78	TXN00151840-SADDLE CONNECTOR, ELECT BOX COVER & BO
08/31/26	9175	HAMMOCK HARDWARE AND SUPP	TXN00151912	$21.07	TXN00151912-ELECT BOX & COVER & ELECT PLUGS-FIRE S
08/31/26	9175	LOWES #02241	TXN00151928	$40.72	TXN00151928-COUPLING, BOX, CONDUIT BODY, FITTING,
			Card Total	$548.71	
03/02/26	9637	ZIA MARIA'S CAFFE	TXN00147806	$61.46	TXN00147806 TDO WORKING BREAKFAST WITH CLARITY OF
			Card Total	$61.46	
08/31/26	9756	Amazon.com 5O0RZ66H2	TXN00151897	$29.88	TXN00151897 Dish Soap x12
08/31/26	9756	SQ KNUCKLE SANDWICH SUB	TXN00151911	$105.00	TXN00151911 Driver Engineer Promotional Assessment
			Card Total	$134.88	
08/31/26	9992	AMZN Mktp US	TXN00151758	$629.44	TXN00151758 - BABY CHANGING TABLE - DOOR CLOSER/HA
08/31/26	9992	SP RESTAURANT SUPPLY	TXN00151776	$3,054.00	TXN00151776 -REFRIGERATOR - NEXUS CENTER
08/31/26	9992	AMAZON RETA	TXN00151797	$819.98	TXN00151797 - PRESSURE WASHER- WET/DRY VAC - FACIL

Flagler County Board of County Commissioners - Disbursement Report Required per F.S. 136.06
Invoices Processed for period 08/29/26 to 09/04/26

Invoice Date	Card #	Vendor Name	Invoice #	Net Trans Amt	Description
08/31/26	9992	AMZN Mktp US	TXN00151932	$189.99	TXN00151932 - BOLLARDS - BULL CREEK RESTAURANT
			Card Total	$4,693.41	
			Report Total	**$23,235.71**	

Flagler County Board of County Commissioners - Disbursement Report Required per F.S. 136.06
Invoices Processed for period 09/05/26 to 09/11/26

Check Date	Check #	Vendor Name	Invoice #	Net Trans Amt	Description
07/23/26	3808	OPTUMRX PBM OF ILLINOIS, INC	INV1736377	$84,725.85	INV1736377 Flagler 07.01.2026 - 07.15.2026
			Check Total	$84,725.85	
07/23/26	3809	OPTUMRX PBM OF ILLINOIS, INC	INV1736954	$5,328.00	INV1736954 Flagler 07.01.2026 - 07.15.2026
			Check Total	$5,328.00	
08/10/26	3852	OPTUMRX PBM OF ILLINOIS, INC	INV1739879	$128,032.93	INV1739879 Flagler 07.16.2026 - 07.31.2026
			Check Total	$128,032.93	
08/24/26	3890	OPTUMRX PBM OF ILLINOIS, INC	INV1746712	$66,252.33	INV1746712 Flagler 08.01.2026 - 08.15.2026
			Check Total	$66,252.33	
08/24/26	3891	OPTUMRX PBM OF ILLINOIS, INC	INV174277	$5,652.00	INV174277 Flagler 08.01.2026 - 08.15.2026
			Check Total	$5,652.00	
08/26/26	3895	P&A ADMINISTRATIVE SERVICES, INC	08.25.2026	$505.08	P&A Flexible Spending 08.24.2026
			Check Total	$505.08	
08/27/26	3896	P&A ADMINISTRATIVE SERVICES, INC	08.26.2026	$877.15	P&A Flexible Spending 08.24.2026 - 08.26.2026
			Check Total	$877.15	
08/28/26	3899	P&A ADMINISTRATIVE SERVICES, INC	08.27.2026	$1,100.37	P&A Flexible Spending 08.27.2026
			Check Total	$1,100.37	
09/04/26	3920	NATIONWIDE RETIREMENT SOLUTIONS INC	09042026	$13,420.53	Payroll Run 1 - Warrant 260904
			Check Total	$13,420.53	
09/04/26	3921	NATIONWIDE RETIREMENT SOLUTIONS INC - ROTH	090426	$1,952.00	Payroll Run 1 - Warrant 260904
			Check Total	$1,952.00	
09/04/26	3923	EXPERT PAY - CHILD SUPPORT WIRE	09042026	$574.99	Payroll Run 1 - Warrant 260904
			Check Total	$574.99	
09/08/26	223151	ADVANCE AUTO PARTS	8483624371595	$405.45	PAD, BRAKE (R Dual) GMKD2280 FORD TRANSIT VAN T-35
			Check Total	$405.45	
09/08/26	223152	ADVENTHEALTH PALM COAST	INMATE [redacted] 05.13.26	$50.00	INMATE MEDICAL [redacted] 05.13.26
			Check Total	$50.00	
09/08/26	223153	AIP US, LLC	260820138	$5,643.00	Cybersecurity Compliance Mgt. 08/20/26 - 08/19/27
			Check Total	$5,643.00	
09/08/26	223154	AIRGAS USA LLC	5526962845	$78.57	Cylinder Rent
09/08/26	223154	AIRGAS USA LLC	9174985274	$317.55	Oxygen
09/08/26	223154	AIRGAS USA LLC	9175209409	$268.64	Oxygen
			Check Total	$664.76	
09/08/26	223155	AK ASSOCIATES	12792-FL	$57,905.68	Solacom Support 06.28.26 - 07.27.27
			Check Total	$57,905.68	
09/08/26	223156	AMERICAN ANESTHESIOLOGY SERVICES OF FLORIDA, INC	RO Mo13409	$136.76	IHC Assist [redacted] RO MO13409
			Check Total	$136.76	
09/08/26	223157	AMERIFLEX	INV1009846	$300.60	August Cobra Admin Fees
			Check Total	$300.60	
09/08/26	223158	AT&T MOBILITY II LLC	287291122839 0826	$185.33	Cellular 07/26/26 - 08/25/26
09/08/26	223158	AT&T MOBILITY II LLC	287304363950 0826	$80.00	Cellular 07/26/26 - 08/25/26
			Check Total	$265.33	
09/08/26	223159	BOULEVARD TIRE CENTER	27-GS122840	$3,803.83	TIRE, 245/75R17 BF GOOD ALL-TERRAIN 000184
			Check Total	$3,803.83	
09/08/26	223160	CARRIER CORPORATION	90567867	$300.55	INV90567867- CHILLER MAINT - SHERIFF OPS -9/1/26
09/08/26	223160	CARRIER CORPORATION	90567868	$95.88	INV90567868 - PUMP MAINT - SHERIFF OPS - 9/1/26
09/08/26	223160	CARRIER CORPORATION	90567869	$149.10	INV90567869 -LIEBERT MAINT- JUSTICE CENTER- 9/1/26
09/08/26	223160	CARRIER CORPORATION	90567870	$125.28	INV90567870 - LIEBERT MAINT- SHERIFF OPS - 9/1/26
			Check Total	$670.81	
09/08/26	223161	CDW GOVERNMENT LLC	AK8B83W	$1,356.96	Docking Stations - FR
			Check Total	$1,356.96	
09/08/26	223162	CELICO AUTO BODY, INC.	RO#29065885	$2,765.24	FCSO 5808 AUTO BODY REPAIR
			Check Total	$2,765.24	
09/08/26	223163	CENGAGE LEARNING INC.	999103162601	$19.19	Book purchases & database renewals
09/08/26	223163	CENGAGE LEARNING INC.	999103162602	$24.00	Book purchases & database renewals
09/08/26	223163	CENGAGE LEARNING INC.	999103162603	$54.40	Book purchases & database renewals
09/08/26	223163	CENGAGE LEARNING INC.	999103162604	$67.99	Book purchases & database renewals
09/08/26	223163	CENGAGE LEARNING INC.	999103316912	$78.40	Book purchases & database renewals
09/08/26	223163	CENGAGE LEARNING INC.	999103316913	$127.19	Book purchases & database renewals
			Check Total	$371.17	
09/08/26	223164	CENTRAL HYDRAULICS INC	30113067	$155.15	REPAIRS TO HYDRUALIC SYSTEMS - 900

Flagler County Board of County Commissioners - Disbursement Report Required per F.S. 136.06
Invoices Processed for period 09/05/26 to 09/11/26

Check Date	Check #	Vendor Name	Invoice #	Net Trans Amt	Description
09/08/26	223164	CENTRAL HYDRAULICS INC	30113679	$308.91	REPAIRS TO HYDRUALIC SYSTEMS - 900
			Check Total	$464.06	
09/08/26	223165	CHARTER COMMUNICATIONS	168030301090126	$10,559.04	Internet Services 09/01/26 - 09/30/26
			Check Total	$10,559.04	
09/08/26	223166	CITY OF BUNNELL	01-0002-01 Aug 26	$592.48	2199 Commerce Pkwy 6.30.26-7.31.26
09/08/26	223166	CITY OF BUNNELL	03-3520-01 0926	$268.72	150 SAWGRASS ROAD, WATER, 06.30.2026 - 07.31.2026
			Check Total	$861.20	
09/08/26	223167	CITY OF BUNNELL	01-0270-01 2026-07	$485.59	EOC Water Service
09/08/26	223167	CITY OF BUNNELL	01-0320-01 2026-07	$259.92	VSB Water Service
09/08/26	223167	CITY OF BUNNELL	01-0331-00 0726	$210.91	FCSO DIST OFFICE -61 SHERIFF EW 6/30/26-7/31/26
09/08/26	223167	CITY OF BUNNELL	01-5190-02 Jul 2026	$637.51	Water Sewer Garbage 1601 Old Moody 06-30 to 07-31
09/08/26	223167	CITY OF BUNNELL	05-0030-01 0726	$19,404.44	FCSO INMATE FAC - 1001 JUSTICE - 6/30/26-7/31/26
09/08/26	223167	CITY OF BUNNELL	05-0040-01 0726	$649.41	FCSO JAIL ADMIN - 1001 JUSTICE - 6/30/26-7/31/26
09/08/26	223167	CITY OF BUNNELL	05-0052-00 0726	$364.78	FCSO SHERIFF BLDG - 610 JUSTICE -6/30/26-7/31/26
09/08/26	223167	CITY OF BUNNELL	05-0070-01 Jul 2026	$89.92	Water 655 Justice Lane 06-30 to 07-31-26 Tower
			Check Total	$22,102.48	
09/08/26	223168	CITY OF PALM COAST	8-31-2026	$317,169.25	CITY OF PALM COAST SPORT COMPLEX 6-8 LIGHTING
09/08/26	223168	CITY OF PALM COAST	RO UO04269	$300.00	PCW Assist [redacted] Biscay Lane
09/08/26	223168	CITY OF PALM COAST	RO UO04270	$208.96	PCW Assist [redacted] Wellwood Lane B
09/08/26	223168	CITY OF PALM COAST	RO UO04271	$300.00	PCW Assist [redacted] Wellwood Lane
09/08/26	223168	CITY OF PALM COAST	RO UO04272	$300.00	PCW Assist [redacted] Zither Court
			Check Total	$318,278.21	
09/08/26	223169	CITY OF PALM COAST	52157	$4,645.95	EMS Fuel 08-28-26 to 09-27-26
			Check Total	$4,645.95	
09/08/26	223170	COMPUTER INFORMATION & PLANNING INC	5701	$8,986.28	Public Defender BOMS 2.0 & STAC 07/01/26 - 06/30/2
			Check Total	$8,986.28	
09/08/26	223171	CONNECTWISE, LLC (F/K/A CONTINUUM PARENT, LLC)	INV01680347	$2,570.41	IT Support Desk Software 09/01/26 - 09/30/26
			Check Total	$2,570.41	
09/08/26	223172	DAVID MICHAEL HUDSON	TR SPRING 26 HUDSON	$600.24	SPRING B - BIO 1301 NON-MAJORS BIOLOGY
			Check Total	$600.24	
09/08/26	223173	DEX IMAGING LLC	AR15890598	$358.04	Plotter Maint 05/17/26 - 08/16/26
			Check Total	$358.04	
09/08/26	223174	DEX IMAGING LLC	42845979	$1,686.05	Printer Leases Pmt 6 of 60 08/25 - 09/24/26
			Check Total	$1,686.05	
09/08/26	223175	DUVAL FORD	TKE90815	$43,335.00	FORD F-150 XLT CREW CAB 4X4 W3L
			Check Total	$43,335.00	
09/08/26	223176	EAST FLAGLER MOSQUITO CONTROL	101322	$461.50	Mosquito Monitoring - Rima Ridge
09/08/26	223176	EAST FLAGLER MOSQUITO CONTROL	101323	$309.83	Mosquito Monitoring - Espanola
			Check Total	$771.33	
09/08/26	223177	ENVIRONMENTAL CONTROL SYSTEMS INC	31698	$275.00	PARKS - HIDDEN TRAILS - RO PUMP OUT
09/08/26	223177	ENVIRONMENTAL CONTROL SYSTEMS INC	31714	$31,850.00	GREASE TRAP/PUMP INSTALL- BULL CREEK RESTAURANT
			Check Total	$32,125.00	
09/08/26	223178	FASTENAL COMPANY	FLORM62608	$64.80	DISC, CUT-OFF 3" 3 X 1/16 X 3/8 25000RPM 0211832
			Check Total	$64.80	
09/08/26	223179	FLAGLER CO CLERK OF CIRCUIT COURT &	09042026	$10.00	Payroll Run 1 - Warrant 260904
			Check Total	$10.00	
09/08/26	223180	FLAGLER CO CLERK OF CIRCUIT COURT &	POSTAGE 0826	$271.98	POSTAGE - AUGUST 2026
			Check Total	$271.98	
09/08/26	223181	FLAGLER CO SHERIFF OFFICE	LETF 9.3.2026	$14,790.00	LAW ENFORCEMENT TRUST FUND REIMB REQUEST 09.03.202
			Check Total	$14,790.00	
09/08/26	223182	FLAGLER COUNTY BOARD OF COUNTY COMMISSIONERS	09042026	$561,080.36	Payroll Run 1 - Warrant 260904
			Check Total	$561,080.36	
09/08/26	223183	FLAGLER COUNTY BOARD OF COUNTY COMMISSIONERS	13170	$1,864.93	FIRE FLIGHT HANGAR RENT

Flagler County Board of County Commissioners - Disbursement Report Required per F.S. 136.06
Invoices Processed for period 09/05/26 to 09/11/26

Check Date	Check #	Vendor Name	Invoice #	Net Trans Amt	Description
09/08/26	223183	FLAGLER COUNTY BOARD OF COUNTY COMMISSIONERS	13171	$382.54	Water & Sewer St 92 & Helicopter Hanger
09/08/26	223183	FLAGLER COUNTY BOARD OF COUNTY COMMISSIONERS	13188	$4,420.41	ANNUAL BUILDING LEASE FY26 SEPT
			Check Total	$6,667.88	
09/08/26	223184	FLAGLER COUNTY BOARD OF COUNTY COMMISSIONERS	POSTAGE 0426	$535.42	April 2026 Postage Charges
09/08/26	223184	FLAGLER COUNTY BOARD OF COUNTY COMMISSIONERS	POSTAGE 0526	$596.07	May 2026 Postage Charges
09/08/26	223184	FLAGLER COUNTY BOARD OF COUNTY COMMISSIONERS	POSTAGE 0626	$520.73	June 2026 Postage Charges
09/08/26	223184	FLAGLER COUNTY BOARD OF COUNTY COMMISSIONERS	POSTAGE 0826	$553.60	August 2026 Postage Charges
			Check Total	$2,205.82	
09/08/26	223185	FLAGLER COUNTY BOARD OF COUNTY COMMISSIONERS	090426	$3,061.91	Payroll Run 1 - Warrant 260904
			Check Total	$3,061.91	
09/08/26	223186	FLORIDA ELITE SOCCER ACADEMY INC	26-0831	$5,000.00	GIRL'S INVITATIONAL SOCCER
09/08/26	223186	FLORIDA ELITE SOCCER ACADEMY INC	26-0832	$5,000.00	BOYS INVITATIONAL SOCCER
			Check Total	$10,000.00	
09/08/26	223187	FLORIDA GOVERNMENT UTILITY AUTHORITY	40010032 0726	$640.89	OLD DIXIE PARK-1250 S OLD DIXIE- 07/02/26-08/03/26
09/08/26	223187	FLORIDA GOVERNMENT UTILITY AUTHORITY	40010038 0726	$390.56	VARN PARK - 3665 NOSB - 07/22/26-08/21/26
			Check Total	$1,031.45	
09/08/26	223188	FLORIDA HOSPITAL MEDICAL GROUP, INC	INMATE [redacted] 01.29.26	$38.94	INMATE MEDICAL [redacted] 01.29.26
09/08/26	223188	FLORIDA HOSPITAL MEDICAL GROUP, INC	INMATE [redacted] 1.29.26-2	$30.91	INMATE MEDICAL [redacted] 01.29.26
			Check Total	$69.85	
09/08/26	223189	FLORIDA HOSPITAL MEDICAL GROUP, INC	INMATE [redacted] 05.20.26	$6.83	INMATE MEDICAL [redacted] 05.20.26
			Check Total	$6.83	
09/08/26	223190	FLORIDA JANITOR & PAPER SUPPLY INC	393268	$241.53	Janitorial Supplies
09/08/26	223190	FLORIDA JANITOR & PAPER SUPPLY INC	393986	$171.70	Janitorial Supplies
			Check Total	$413.23	
09/08/26	223191	FLORIDA POWER & LIGHT COMPANY	01956-16289 0826	$2,379.17	FCSO JAIL ADMIN - 1001 JUSTICE - 7/30/26-8/31/26
09/08/26	223191	FLORIDA POWER & LIGHT COMPANY	06874-05688 0826	$455.09	HAMMOCK CC - 79 MALACOMPRA - 07/24/26-08/25/26
09/08/26	223191	FLORIDA POWER & LIGHT COMPANY	07090-14427 0826	$250.84	LANDFILL - 1700 OLD KINGS - 8/3/26-9/1/26
09/08/26	223191	FLORIDA POWER & LIGHT COMPANY	15116-42322 Sept 26	$4,617.37	2199 Commerce Pkwy 8.5.26 - 9.3.26
09/08/26	223191	FLORIDA POWER & LIGHT COMPANY	15898-02519 0926	$1,046.94	150 SAWGRASS ROAD, POWER, 08.04.2026 - 09.02.2026
09/08/26	223191	FLORIDA POWER & LIGHT COMPANY	28533-73419 0826	$531.70	FCSO SHERIFF BLDG - 610 JUSTICE - 7/30/26-8/31/26
09/08/26	223191	FLORIDA POWER & LIGHT COMPANY	31022-57114 0826	$605.00	1001 Justice Ln Tower 07/30 - 08/31/2026
09/08/26	223191	FLORIDA POWER & LIGHT COMPANY	31858-72193 0826	$458.59	BC SW CAMP - 3861 W CR 2006 - 07/23/26-08/24/26
09/08/26	223191	FLORIDA POWER & LIGHT COMPANY	32820-32121 0826	$297.28	LEGACY HOUSE - 2500 PP RD - 07/23/26-08/24/26
09/08/26	223191	FLORIDA POWER & LIGHT COMPANY	36742-68275 0826	$361.39	FB ST LT - 1000 MOODY - 08/03/26-09/01/26
09/08/26	223191	FLORIDA POWER & LIGHT COMPANY	39389-61087 Aug 2026	$824.70	St 40 - 5593 N Ocean Shore Blvd 07.29.26-08.28.26
09/08/26	223191	FLORIDA POWER & LIGHT COMPANY	40122-87340 0826	$4,110.70	FCSO INMATE FAC - 1002 JUSTICE - 7/30/26-8/31/26
09/08/26	223191	FLORIDA POWER & LIGHT COMPANY	41445-07755 08-26	$323.02	St 58 - 1 Rimi Ridge 07.24.26-08.24.26
09/08/26	223191	FLORIDA POWER & LIGHT COMPANY	50759-58024 08.26	$462.47	245 COUNTY RD 305 # CNST 07.23.2026 - 08.24.2026
09/08/26	223191	FLORIDA POWER & LIGHT COMPANY	51321-23448 0826	$244.85	LM OFFICE - 9701 OCEANSHORE BLVD-07/29/26-08/28/26
09/08/26	223191	FLORIDA POWER & LIGHT COMPANY	62068-57051 0826	$728.23	PPP LODGE - 2500 PP RD - 07/23/26-08/24/26
09/08/26	223191	FLORIDA POWER & LIGHT COMPANY	80548-26360 0826	$279.74	PPP ISLAND HOUSE - 2500 PP RD - 07/23/26-08/24/26
09/08/26	223191	FLORIDA POWER & LIGHT COMPANY	81090-05747 0826	$279.48	HAW CREEK CC - 9257 CR 304 - 07/23/26-08/24/26
09/08/26	223191	FLORIDA POWER & LIGHT COMPANY	86323-22320 Aug 26	$6,019.14	2500 Palm Coast Pkwy NW #Library 7.17.26-8.18.26
09/08/26	223191	FLORIDA POWER & LIGHT COMPANY	88277-77288 0826	$476.77	1250 Old Dixie Tower 08/03/26 - 09/01/26
			Check Total	$24,752.47	
09/08/26	223192	FLORIDA POWER & LIGHT COMPANY	03187-55246 0826	$171.18	R.L. CARETAKER - 1705 CR 2007 - 07/23/26-08/24/26
09/08/26	223192	FLORIDA POWER & LIGHT COMPANY	06375-06288 0826	$50.30	BC CAMP ST LIGHT-3861 W CR 2006- 07/23/26-08/24/26
09/08/26	223192	FLORIDA POWER & LIGHT COMPANY	12767-86025 0826	$154.56	HIDDEN TRLS CC - 6108 MAHOGANY - 07/27/26-08/26/26

Flagler County Board of County Commissioners - Disbursement Report Required per F.S. 136.06
Invoices Processed for period 09/05/26 to 09/11/26

Check Date	Check #	Vendor Name	Invoice #	Net Trans Amt	Description
09/08/26	223192	FLORIDA POWER & LIGHT COMPANY	13664-19370 0826	$48.16	PPP RESTROOM/BARN - 2500 PP RD - 07/23/26-08/24/26
09/08/26	223192	FLORIDA POWER & LIGHT COMPANY	16049-79573 0826	$95.87	PPP COTTAGE#1 - 2604 PP RD - 07/23/26-08/24/26
09/08/26	223192	FLORIDA POWER & LIGHT COMPANY	17482-31378 0826	$107.26	PPP ISLAND HOUSE - 1852 PP RD - 07/23/26-08/24/26
09/08/26	223192	FLORIDA POWER & LIGHT COMPANY	21842-01701 0826	$182.76	PELLICER CC - 1380 CR 2007 - 07/23/26-08/24/26
09/08/26	223192	FLORIDA POWER & LIGHT COMPANY	32515-00892 0726	$41.36	FLAGLER RAMS - 1100 S OLD KINGS - 7/1/26-8/3/26
09/08/26	223192	FLORIDA POWER & LIGHT COMPANY	32555-09899 0826	$43.07	FLAGLER RAMS - 1100 S OLD KINGS - 8/3/26-9/1/26
09/08/26	223192	FLORIDA POWER & LIGHT COMPANY	34837-91483 0826	$152.36	BC CAMP BATHHOUSE-3861 W CR 2006-07/23/26-08/24/26
09/08/26	223192	FLORIDA POWER & LIGHT COMPANY	36563-15029 0826	$137.66	HIDDEN TRLS WELL-6108 MAHOGANY-07/27/26-08/26/26
09/08/26	223192	FLORIDA POWER & LIGHT COMPANY	77979-32220 0826	$49.94	RUSSELL LANDING PAV-2007 CR 2007-07/23/26-08/24/26
09/08/26	223192	FLORIDA POWER & LIGHT COMPANY	84465-89445 0526	$40.95	BC SE CAMP - 3861 W CR 2006 - 04/22/26-05/22/26
09/08/26	223192	FLORIDA POWER & LIGHT COMPANY	84465-89445 0726	$58.77	BC SE CAMP - 3861 W CR 2006 - 06/23/26-07/23/26
09/08/26	223192	FLORIDA POWER & LIGHT COMPANY	84465-89445 0826	$65.93	BC SE CAMP - 3861 W CR 2006 - 07/23/26-08/24/26
09/08/26	223192	FLORIDA POWER & LIGHT COMPANY	86933-00611 0826	$69.83	BINGS LANDING RESTROOM-5862 NOSB-07/24/26-08/25/26
09/08/26	223192	FLORIDA POWER & LIGHT COMPANY	92357-52210 0826	$109.26	HIDDEN TRLS #OL-6108 MAHOGANY-07/27/26-08/26/26
09/08/26	223192	FLORIDA POWER & LIGHT COMPANY	94499-89574 0826	$209.84	PPP COTTAGE#2&3 - 2610 PP RD - 07/23/26-08/24/26
09/08/26	223192	FLORIDA POWER & LIGHT COMPANY	96118-17231 0826	$163.28	PPP CARETAKER - 2500 PP RD - 07/23/26-08/24/26
09/08/26	223192	FLORIDA POWER & LIGHT COMPANY	98467-02190 0826	$233.93	R2S CARETAKER - 9805 NOSB - 07/29/26-08/28/26
			Check Total	$2,186.27	
09/08/26	223193	FLORIDA POWER & LIGHT COMPANY	03937-28589 0826	$32.17	PPP 2ND GATE - 2500 PP RD - 07/23/26-08/24/26
09/08/26	223193	FLORIDA POWER & LIGHT COMPANY	16064-05635 0826	$32.75	MALACOMPRA PARK-115 MALACOMPRA-07/24/26-08/25/26
09/08/26	223193	FLORIDA POWER & LIGHT COMPANY	21728-50535 0826	$31.48	A1A TENNIS CT - 5633 NOSB - 07/29/26-08/28/26
09/08/26	223193	FLORIDA POWER & LIGHT COMPANY	21962-09718 0826	$30.89	PELLICER ARENA - 1380 CR 2007 - 07/23/26-08/24/26
09/08/26	223193	FLORIDA POWER & LIGHT COMPANY	26363-71375 0826	$30.92	LANDFILL WELL - 1700 S OLD KINGS - 8/3/26-9/1/26
09/08/26	223193	FLORIDA POWER & LIGHT COMPANY	32515-00892 0826	$37.62	FLAGLER RAMS - 1100 S OLD KINGS - 8/3/26-9/1/26
09/08/26	223193	FLORIDA POWER & LIGHT COMPANY	34228-11491 0826	$35.17	PPP PUMPHOUSE 1 - 2500 PP RD - 07/23/26-08/24/26
09/08/26	223193	FLORIDA POWER & LIGHT COMPANY	44664-41492 0826	$33.72	PPP - OLD CARETAKER-2500 PP RD - 07/23/26-08/24/26
09/08/26	223193	FLORIDA POWER & LIGHT COMPANY	45498-00391 0826	$34.03	PPP EQUEST CAMP - 2500 PP RD - 07/23/26-08/24/26
09/08/26	223193	FLORIDA POWER & LIGHT COMPANY	47343-86420 0826	$30.80	PPP MAIN GATE - 2500 PP RD - 07/23/26-08/24/26
09/08/26	223193	FLORIDA POWER & LIGHT COMPANY	56205-24370 0826	$34.82	VARN PARK - 3665 NOSB - 07/24/26-08/25/26
09/08/26	223193	FLORIDA POWER & LIGHT COMPANY	61332-55411 0826	$30.80	BC - 3732 W CR 2006 #1 - 07/23/26-08/24/26
09/08/26	223193	FLORIDA POWER & LIGHT COMPANY	64470-84044 0826	$32.07	RUSSELL LAND CAMP-1669 CR 2007 -07/23/26-08/24/26
09/08/26	223193	FLORIDA POWER & LIGHT COMPANY	74064-79332 0826	$33.32	OLD SALT PARK - 200 16TH - 07/29/26-08/28/26
09/08/26	223193	FLORIDA POWER & LIGHT COMPANY	75684-02643 0626	$38.38	JUNGLE HUT PARK-125 JUNGLE HUT-05/29/26-06/29/26
09/08/26	223193	FLORIDA POWER & LIGHT COMPANY	75684-02643 0726	$38.26	JUNGLE HUT PARK-125 JUNGLE HUT-06/29/26-07/29/26
09/08/26	223193	FLORIDA POWER & LIGHT COMPANY	75684-02643 0826	$37.85	JUNGLE HUT PARK-125 JUNGLE HUT-07/29/26-08/28/26
09/08/26	223193	FLORIDA POWER & LIGHT COMPANY	81713-40493 0826	$30.80	PPP OPEN FIELD - 2500 PP RD - 07/23/26-08/24/26
09/08/26	223193	FLORIDA POWER & LIGHT COMPANY	84465-89445 0626	$38.63	BC SE CAMP - 3861 W CR 2006 - 05/22/26-06/23/26
09/08/26	223193	FLORIDA POWER & LIGHT COMPANY	91194-99433 0826	$31.70	BINGS LANDING PAV - 5862 NOSB - 07/24/26-08/25/26
			Check Total	$676.18	
09/08/26	223194	FLORIDA POWER & LIGHT COMPANY	55778-80338 0826	$12.46	PPP OUTSIDE LT - 2500 PP RD - 07/23/26-08/24/26
09/08/26	223194	FLORIDA POWER & LIGHT COMPANY	83341-06518 0826	$24.92	PPP OUTSIDE LT 2 - 2500 PP RD - 07/23/26-08/24/26
			Check Total	$37.38	
09/08/26	223195	FLORIDA POWER & LIGHT COMPANY-ASSIS	RO UO04268	$92.38	EA Assist [redacted] Biscay Lane
			Check Total	$92.38	
09/08/26	223196	GRAFT, INC	653501	$395.00	ORLANDO WEB PACKAGE SEPT
			Check Total	$395.00	
09/08/26	223197	GUARDIAN FUELING TECHNOLOGIES INC	SRVCE2978833	$2,699.39	FUEL FARM PUMP REPAIR
			Check Total	$2,699.39	
09/08/26	223198	HANSON PROFESSIONAL SERVICES, INC.	ARIV1024849	$47,424.60	FOREST PARK STREET/CR35 DESIGN 07/26
09/08/26	223198	HANSON PROFESSIONAL SERVICES, INC.	ARIV1025953	$8,503.31	FOREST PARK STREET/CR35 DESIGN 9/26
			Check Total	$55,927.91	

Flagler County Board of County Commissioners - Disbursement Report Required per F.S. 136.06
Invoices Processed for period 09/05/26 to 09/11/26

Check Date	Check #	Vendor Name	Invoice #	Net Trans Amt	Description
09/08/26	223199	HILLPOINTE WORKFORCE HOUSING PARTNERSHIP II, LP	RO RO02145	$1,375.00	EA Assist [redacted] Yukon Dr # [redacted] Palm Coast
			Check Total	$1,375.00	
09/08/26	223200	INDIGITAL TELECOM	26830	$4,758.00	E911 Routing 0926
			Check Total	$4,758.00	
09/08/26	223201	INGRAM LIBRARY SERVICES, LLC	98780312	$185.59	Purchase of Library Books and Materials
09/08/26	223201	INGRAM LIBRARY SERVICES, LLC	98780314	$39.72	Purchase of Library Books and Materials
09/08/26	223201	INGRAM LIBRARY SERVICES, LLC	98780315	$51.63	Purchase of Library Books and Materials
09/08/26	223201	INGRAM LIBRARY SERVICES, LLC	98796496	$99.29	Purchase of Library Books and Materials
09/08/26	223201	INGRAM LIBRARY SERVICES, LLC	98796497	$58.62	Purchase of Library Books and Materials
09/08/26	223201	INGRAM LIBRARY SERVICES, LLC	98853449	$37.93	Purchase of Library Books and Materials
09/08/26	223201	INGRAM LIBRARY SERVICES, LLC	98853450	$92.04	Purchase of Library Books and Materials
09/08/26	223201	INGRAM LIBRARY SERVICES, LLC	98853452	$57.32	Purchase of Library Books and Materials
09/08/26	223201	INGRAM LIBRARY SERVICES, LLC	99009755	$38.70	Purchase of Library Books and Materials
09/08/26	223201	INGRAM LIBRARY SERVICES, LLC	99009757	$99.16	Purchase of Library Books and Materials
09/08/26	223201	INGRAM LIBRARY SERVICES, LLC	99009758	$328.53	Purchase of Library Books and Materials
09/08/26	223201	INGRAM LIBRARY SERVICES, LLC	99009759	$82.03	Purchase of Library Books and Materials
09/08/26	223201	INGRAM LIBRARY SERVICES, LLC	99009760	$71.71	Purchase of Library Books and Materials
09/08/26	223201	INGRAM LIBRARY SERVICES, LLC	99029415	$150.10	Purchase of Library Books and Materials
09/08/26	223201	INGRAM LIBRARY SERVICES, LLC	99029418	$2,521.66	Purchase of Library Books and Materials
09/08/26	223201	INGRAM LIBRARY SERVICES, LLC	99059782	$37.70	Purchase of Library Books and Materials
09/08/26	223201	INGRAM LIBRARY SERVICES, LLC	99059783	$106.77	Purchase of Library Books and Materials
09/08/26	223201	INGRAM LIBRARY SERVICES, LLC	99059784	$63.50	Purchase of Library Books and Materials
09/08/26	223201	INGRAM LIBRARY SERVICES, LLC	99059785	$56.45	Purchase of Library Books and Materials
09/08/26	223201	INGRAM LIBRARY SERVICES, LLC	99059788	$43.56	Purchase of Library Books and Materials
			Check Total	$4,222.01	
09/08/26	223202	INGRAM LIBRARY SERVICES, LLC	98780313	$19.17	Purchase of Library Books and Materials
09/08/26	223202	INGRAM LIBRARY SERVICES, LLC	98780316	$27.83	Purchase of Library Books and Materials
09/08/26	223202	INGRAM LIBRARY SERVICES, LLC	98853448	$19.20	Purchase of Library Books and Materials
09/08/26	223202	INGRAM LIBRARY SERVICES, LLC	98853451	$18.04	Purchase of Library Books and Materials
09/08/26	223202	INGRAM LIBRARY SERVICES, LLC	98853453	$8.73	Purchase of Library Books and Materials
09/08/26	223202	INGRAM LIBRARY SERVICES, LLC	99009756	$22.47	Purchase of Library Books and Materials
09/08/26	223202	INGRAM LIBRARY SERVICES, LLC	99029416	$8.51	Purchase of Library Books and Materials
09/08/26	223202	INGRAM LIBRARY SERVICES, LLC	99029417	$33.82	Purchase of Library Books and Materials
09/08/26	223202	INGRAM LIBRARY SERVICES, LLC	99059786	$22.06	Purchase of Library Books and Materials
09/08/26	223202	INGRAM LIBRARY SERVICES, LLC	99059787	$19.16	Purchase of Library Books and Materials
09/08/26	223202	INGRAM LIBRARY SERVICES, LLC	99059789	$5.24	Purchase of Library Books and Materials
			Check Total	$204.23	
09/08/26	223203	JONATHAN KAYE	SUMMER B 2026 KAYE	$600.24	ENG 1302 ENGLISH COMPOSITION II
			Check Total	$600.24	
09/08/26	223204	KARL N. FLAGG SERENITY MEMORIAL	TRANSPORT 0826	$6,720.00	TRANSPORTATION OF CADAVER SERVICES AUGUST 2026
			Check Total	$6,720.00	
09/08/26	223205	RELX INC.	3096708384	$300.00	LexisNexis Subscription 8.1.26-8.31-26
			Check Total	$300.00	
09/08/26	223206	LOWE'S HOME CENTERS, LLC	57638	$204.87	RESTROOM FIXTURES-PAINT SUPPLIES-RIVER TO SEA
09/08/26	223206	LOWE'S HOME CENTERS, LLC	63753	$530.70	STEEL MOUNTING BRACKETS - BULL CREEK RESTAURANT
09/08/26	223206	LOWE'S HOME CENTERS, LLC	66752	$127.32	LUMBER-SCREWS-REFLECTORS-HAMMOCK BIKE TRAIL
09/08/26	223206	LOWE'S HOME CENTERS, LLC	88094	$1,927.53	CONSTRUCTION MATERIALS-BULL CREEK
09/08/26	223206	LOWE'S HOME CENTERS, LLC	94322	$553.28	PAINT- RIVER TO SEA RESTROOMS
			Check Total	$3,343.70	
09/08/26	223207	MASSEY SERVICES INC	71977878	$30.00	INV#71977878-Flight Hanger-Rodent Exclusion -08.26
09/08/26	223207	MASSEY SERVICES INC	71993104	$30.00	INV#71993104 -Haw Creek CC-Rodent Exclusion -08.26
09/08/26	223207	MASSEY SERVICES INC	71999317	$20.00	INV#71999317 -Pellicer CC -Rodent Exclusion- 08.26
09/08/26	223207	MASSEY SERVICES INC	72018819	$20.00	INV#72018819- Hidden Tr CC- Rodent Exclusion-08.26
09/08/26	223207	MASSEY SERVICES INC	72091797	$18.00	INV#72091797 -Carver Gym -Rodent Exclusion - 08.26
			Check Total	$118.00	
09/08/26	223208	MCKESSON MEDICAL-SURGICAL INC	26127040	$28.99	MEDICAL GOODS & SUPPLIES FOR EMPLOYEE CLINIC
09/08/26	223208	MCKESSON MEDICAL-SURGICAL INC	91232245	$1,224.17	MEDICAL GOODS & SUPPLIES FOR EMPLOYEE CLINIC
			Check Total	$1,253.16	
09/08/26	223209	METRONET	2297879 0926	$2,934.95	09/02 - 10/01 Business Fiber Elite
			Check Total	$2,934.95	
09/08/26	223210	MIDWEST TAPE, LLC	509340435	$106.46	Purchase of DVD's - PC and Bunnell

Flagler County Board of County Commissioners - Disbursement Report Required per F.S. 136.06
Invoices Processed for period 09/05/26 to 09/11/26

Check Date	Check #	Vendor Name	Invoice #	Net Trans Amt	Description
09/08/26	223210	MIDWEST TAPE, LLC	509360553	$2,216.55	Renewal of Online Subscriptions (as needed)
09/08/26	223210	MIDWEST TAPE, LLC	509371967	$25.49	Purchase of DVD's - PC and Bunnell
09/08/26	223210	MIDWEST TAPE, LLC	509371969	$25.49	Purchase of DVD's - PC and Bunnell
			Check Total	$2,373.99	
09/08/26	223211	MEDICAL RISK SOLUTIONS, LLC	105608	$12,190.00	SERVICES FOR MANAGING EMPLOYEE CLINIC
09/08/26	223211	MEDICAL RISK SOLUTIONS, LLC	105665	$78,707.90	SERVICES FOR MANAGING EMPLOYEE CLINIC
			Check Total	$90,897.90	
09/08/26	223212	NAFECO	1441580	$78.00	Uniforms
09/08/26	223212	NAFECO	1441581	$78.00	Uniforms
09/08/26	223212	NAFECO	1441582	$78.00	Uniforms
09/08/26	223212	NAFECO	1441583	$90.15	Uniforms
09/08/26	223212	NAFECO	1441631	$198.00	Uniforms
09/08/26	223212	NAFECO	1441958	$2,525.00	Super Vac Door & Webbing Hanging Strap Set x5
09/08/26	223212	NAFECO	P-1381961	$4,550.00	Super Vac Battery
			Check Total	$7,597.15	
09/08/26	223213	NEFLIN	10012	$135.00	NEFLIN 2026 Registration Fees X 3
			Check Total	$135.00	
09/08/26	223214	NOVARE LIBRARY SERVICES	2159	$308.50	Continuation of Novare Website Maintenance Contrac
			Check Total	$308.50	
09/08/26	223215	AETNA	ACID# 24574	$215.56	AMB BILLING REFUND [redacted]
			Check Total	$215.56	
09/08/26	223216	[redacted]	ACID# 6482	$28.27	AMB BILLING REFUND [redacted]
			Check Total	$28.27	
09/08/26	223217	FLORIDA HEALTH CARE PLANS	ACID# 17990	$385.00	AMB BILLING REFUND [redacted]
			Check Total	$385.00	
09/08/26	223218	[redacted]	ACID# 24908	$110.38	AMB BILLING REFUND [redacted]
			Check Total	$110.38	
09/08/26	223219	[redacted]	ACID# 25323	$120.00	AMB BILLING REFUND [redacted]
			Check Total	$120.00	
09/08/26	223220	[redacted]	ACID# 13108	$111.06	AMB BILLING REFUND [redacted]
			Check Total	$111.06	
09/08/26	223221	[redacted]	ACID# 14770	$420.00	AMB BILLING REFUND [redacted]
			Check Total	$420.00	
09/08/26	223222	[redacted]	ACID# 27663	$116.79	AMB BILLING REFUND [redacted]
			Check Total	$116.79	
09/08/26	223223	[redacted]	ACID# 31351	$70.00	AMB BILLING REFUND [redacted]
			Check Total	$70.00	
09/08/26	223224	[redacted]	ACID# 22859	$342.82	AMB BILLING REFUND [redacted]
			Check Total	$342.82	
09/08/26	223225	[redacted]	ACID# 26501	$25.00	AMB BILLING REFUND [redacted]
			Check Total	$25.00	
09/08/26	223226	[redacted]	ACID#15484	$443.65	AM BILLING REFUND [redacted]
			Check Total	$443.65	
09/08/26	223227	UNITEDHEALTHCARE INSURANCE COMPANY	ACID# 24611	$68.79	AMB REFUND REF [redacted]
			Check Total	$68.79	
09/08/26	223228	UNITEDHEALTHCARE INSURANCE COMPANY	ACID# 6902	$25.92	AMB REFUND [redacted]
			Check Total	$25.92	
09/08/26	223229	ALS PALM COAST LLC	50117	$874.00	08.26 - PPP COTTAGES & LEGACY HOUSE - LAUNDRY
			Check Total	$874.00	
09/08/26	223230	PALM POINTE HOLDINGS	RO RO02141	$1,345.00	EA Assist [redacted] E Moody Blvd # [redacted]
			Check Total	$1,345.00	
09/08/26	223231	PRIME HEALTH SERVICES, INC	117667	$58.13	INMATE MEDICAL [redacted] 07.06.26
09/08/26	223231	PRIME HEALTH SERVICES, INC	117668	$150.86	INMATE MEDICAL [redacted] 05.28.26
09/08/26	223231	PRIME HEALTH SERVICES, INC	117669	$5,299.32	INMATE MEDICAL [redacted] 07.10-14.26
09/08/26	223231	PRIME HEALTH SERVICES, INC	117670	$91.34	INMATE MEDICAL [redacted] 07.13.26
			Check Total	$5,599.65	
09/08/26	223232	ALICEA, DAISY	14934 - ALICEA	$100.00	14934 - ESPANOLA CC
			Check Total	$100.00	
09/08/26	223233	ANDERS, GLENN	14647 - ANDERS	$200.00	14647 - PPP COTTAGE#2
			Check Total	$200.00	
09/08/26	223234	BARBER, HEATHER	15873 - BARBER	$200.00	15873 - PPP COTTAGE#2
			Check Total	$200.00	
09/08/26	223235	BEAVERS, ELIZABETH	15847-1 - BEAVERS	$7.85	15847-1 - TAX REFUND - HAMMOCK CC
			Check Total	$7.85	

Flagler County Board of County Commissioners - Disbursement Report Required per F.S. 136.06
Invoices Processed for period 09/05/26 to 09/11/26

Check Date	Check #	Vendor Name	Invoice #	Net Trans Amt	Description
09/08/26	223236	BENNETT, KIM	15502 - BENNETT	$100.00	15502 - HAW CREEK CC
			Check Total	$100.00	
09/08/26	223237	CELICO, CARMINE	15590 - CELICO	$100.00	15590 - HAMMOCK CC
			Check Total	$100.00	
09/08/26	223238	EDWARDS, KSENIYA	15697 - EDWARDS	$100.00	15697 - HERSCHEL KING PARK PAVILION
			Check Total	$100.00	
09/08/26	223239	FLAGLER TURTLE PATROL	15876-FLAGLER TURTLE	$100.00	15876 - HAMMOCK CC
			Check Total	$100.00	
09/08/26	223240	FLEET, KRISTAN	15767 - FLEET	$200.00	15767 - PPP COTTAGE#3
			Check Total	$200.00	
09/08/26	223241	GARRISON, MARGERY	15814-2 - GARRISON	$250.00	15814-2 - PPP COTTAGE#2 - CANCELLATION
			Check Total	$250.00	
09/08/26	223242	GARRISON, MARGERY	15814-1 - GARRISON	$200.00	15814-1 - PPP COTTAGE#2 - CANCELLATION
			Check Total	$200.00	
09/08/26	223243	GARRISON, MARGERY	15814-3 - GARRISON	$125.00	15814-3 - PPP COTTAGE#2 - CANCELLATION
			Check Total	$125.00	
09/08/26	223244	GOLL, VICTORIA	15863 - GOLL	$100.00	15863 - HIDDEN TRAILS CC
			Check Total	$100.00	
09/08/26	223245	LAGANA, ELIZABETH	15867-1 - LAGANA	$100.00	15867-1 - HIDDEN TRAILS CC -CANCELLATION
			Check Total	$100.00	
09/08/26	223246	LAGANA, ELIZABETH	15867-2 - LAGANA	$120.00	15867-2 - HIDDEN TRAILS CC -CANCELLATION
			Check Total	$120.00	
09/08/26	223247	MERCER, CHERIE	15787 - MERCER	$100.00	15787 - HAMMOCK CC
			Check Total	$100.00	
09/08/26	223248	OROPESA, LIYAN	15784 - OROPESA	$100.00	15784 - HERSCHEL KING PARK PAVILION
			Check Total	$100.00	
09/08/26	223249	PACHECO, VARLUCE	15862 - PACHECO	$100.00	15862 - HAW CREEK CC
			Check Total	$100.00	
09/08/26	223250	PANEPINTO-STEMEN, CATHERINE	15792-PANEPINTO-STEM	$100.00	15792 - HIDDEN TRAILS CC
			Check Total	$100.00	
09/08/26	223251	ROBLES, SABRINA	14764 - ROBLES	$100.00	14764 - HAMMOCK CC
			Check Total	$100.00	
09/08/26	223252	SILCOX, MARIAH	15734 - SILCOX	$100.00	15734 - PELLICER CC
			Check Total	$100.00	
09/08/26	223253	TISHENKO, VITALIY	15872 - TISHENKO	$100.00	15872 - BAY DRIVE PARK PAVILION
			Check Total	$100.00	
09/08/26	223254	RENTALS TO GO OF FL, LLC	2173734	$140.00	INV#2173734 - TOILET RENTAL- RIVER TO SEA- SEPT 26
09/08/26	223254	RENTALS TO GO OF FL, LLC	2173735	$480.00	INV#2173735- TOILET RENTAL -PRINCESS PL- SEPT 26
09/08/26	223254	RENTALS TO GO OF FL, LLC	2173736	$80.00	INV#2173736- TOILET RENTAL - HAMMOCK - SEPT 26
09/08/26	223254	RENTALS TO GO OF FL, LLC	2173737	$80.00	INV#2173737 -TOILET RENTAL- GRAHAM SWAMP - SEPT 26
09/08/26	223254	RENTALS TO GO OF FL, LLC	2173738	$80.00	INV#2173738 - TOILET RENTAL- LAKE DISSTON -SEPT 26
09/08/26	223254	RENTALS TO GO OF FL, LLC	2173739	$444.29	EXTENDED TOLIET RENTAL- RIVER TO SEA REST REPAIRS
			Check Total	$1,304.29	
09/08/26	223255	RING POWER CORPORATION	18BC0009439	($787.55)	CORE CREDIT REFUND FROM INV 18BC0009392
09/08/26	223255	RING POWER CORPORATION	18BC0010126	$2,478.86	EQUIPMENT PARTS AND REPAIRS - 8821
09/08/26	223255	RING POWER CORPORATION	18BC0010267	$239.74	EQUIPMENT PARTS AND REPAIRS - 900
			Check Total	$1,931.05	
09/08/26	223256	RIVER TO SEA TRANPORTATION PLANNING ORGANIZATION	FC2027	$1,999.00	VOLUSI-FLAGLER TPO FY 26/27
			Check Total	$1,999.00	
09/08/26	223257	SKYBASE COMMUNICATIONS LLC	39091	$198.00	Monthly Satellite Voice Service
			Check Total	$198.00	
09/08/26	223258	SOUTHEASTERN LAUNDRY EQUIPMENT SALES, LLC.	INV152186	$2,806.00	INV1152186 - INMATE FACILITIES - AUG 26
			Check Total	$2,806.00	

Flagler County Board of County Commissioners - Disbursement Report Required per F.S. 136.06
Invoices Processed for period 09/05/26 to 09/11/26

Check Date	Check #	Vendor Name	Invoice #	Net Trans Amt	Description
09/08/26	223259	SUNOCO LP	60934194	$28,141.56	BULK FUEL
			Check Total	$28,141.56	
09/08/26	223260	SW ELEVATORS, LLC	87676	$1,390.50	REPLACE DAMAGED POWER BOARD #3 - GSB - MATERIALS
09/08/26	223260	SW ELEVATORS, LLC	92701	$1,390.50	REPLACE DAMAGED POWER BOARD #3 - GSB - LABOR
			Check Total	$2,781.00	
09/08/26	223261	TECHNICAL RESOURCE MANAGEMENT, LLC	FS-14293083126	$743.58	DRUG SCREENING SERVICES - PRETRAIL AUGUST 2026
09/08/26	223261	TECHNICAL RESOURCE MANAGEMENT, LLC	FS-14294083126	$2,561.22	DRUG SCREENING SERVICES - DRUG COURT AUGUST 2026
			Check Total	$3,304.80	
09/08/26	223262	TECO PEOPLES GAS	211012619618 0826	$943.71	FCSO INMATE FAC - 1002 JUSTICE - 7/30/26-8/27/26
			Check Total	$943.71	
09/08/26	223263	TEN-8 FIRE EQUIPMENT, INC	1310072718	$883.80	Vehicle Mount
09/08/26	223263	TEN-8 FIRE EQUIPMENT, INC	1310074995	$125.85	Nozzle System
09/08/26	223263	TEN-8 FIRE EQUIPMENT, INC	1310075754	$565.16	Helmet Fronts
09/08/26	223263	TEN-8 FIRE EQUIPMENT, INC	1310076714	$938.17	Stabilization Equipment
09/08/26	223263	TEN-8 FIRE EQUIPMENT, INC	1310078491	$1,647.44	Piercing Nozzle
09/08/26	223263	TEN-8 FIRE EQUIPMENT, INC	1310084182	$325.50	SCBA On-Site Repairs
09/08/26	223263	TEN-8 FIRE EQUIPMENT, INC	1410001701 CM	($63.02)	Credit for Inv 1310049782 FY 24/25
09/08/26	223263	TEN-8 FIRE EQUIPMENT, INC	1410002021 CM	($353.63)	Credit for Inv 1310077256 FY 24/25
			Check Total	$4,069.27	
09/08/26	223264	THE PALMS AT TOWN CENTER	RO RO02146	$1,500.00	EA Assist [redacted] Bulldog Dr. # [redacted]
			Check Total	$1,500.00	
09/08/26	223265	TRANSPORTATION SOLUTIONS & LIGHTING, INC.	INV-9015	$11,928.00	EM Call Boxes - Data Plan & Maint 9/1 26 - 8/31/27
			Check Total	$11,928.00	
09/08/26	223266	ULLOA MANAGEMENT GROUP LLC	2026-011	$24,050.00	REHAB @ 63 BLAKEMORE DR.
			Check Total	$24,050.00	
09/08/26	223267	US WATER SERVICES CORPORATION	SI156902	$2,376.59	PARKS - HT & BC - 09.26 - MONTHLY PLANT OPS
			Check Total	$2,376.59	
09/08/26	223268	VIRTUAL HOMES REALTY	RO RO02147	$1,500.00	EA Assist [redacted] Slumber Path
			Check Total	$1,500.00	
09/08/26	223269	W.W. GAY MECHANICAL CONTRACTOR, INC	1820218LUMP-01	$95,000.00	HVAC NIAGARA CONTROLS UPDATE
			Check Total	$95,000.00	
09/08/26	223270	W.W. GRAINGER, INC	9064799266	$38.70	Safety Glasses
			Check Total	$38.70	
09/08/26	223271	WASTE MANAGEMENT INC. OF FLORIDA	0001807-4636-4	$265.73	LANDFILL TIPPING FEES-PARKS & FACILITIES
			Check Total	$265.73	
09/08/26	223272	WASTE PRO OF FLORIDA INC	Waste 9/1/2026	$346,311.48	August Residential Solid Waste FY 2026 - 9.1.26
09/08/26	223272	WASTE PRO OF FLORIDA INC	Waste 9/1/2026A	($24,241.80)	August 2026 Franchise Fee - 9.1.26
			Check Total	$322,069.68	
09/08/26	223273	WEATHERSTEM, INC.	INV-1169	$716.66	WeatherSTEM Station Maintenance
			Check Total	$716.66	
09/08/26	223274	WEX BANK	114874979	$4,330.01	WEX GAS CARDS MONTHLY BILLS AUGUST 2026
			Check Total	$4,330.01	
09/08/26	223275	AFLAC PREMIUM HOLDING	081426	$615.90	Payroll Run 1 - Warrant 260814
09/08/26	223275	AFLAC PREMIUM HOLDING	08212026	$615.90	Payroll Run 1 - Warrant 260821
09/08/26	223275	AFLAC PREMIUM HOLDING	082826	$615.90	Payroll Run 1 - Warrant 260828
09/08/26	223275	AFLAC PREMIUM HOLDING	09042026	$615.90	Payroll Run 1 - Warrant 260904
			Check Total	$2,463.60	
			Report Total	**$2,170,409.42**	

FLAGLER COUNTY BOARD OF COUNTY COMMISSIONERS

AUGUST 10, 2026

WORKSHOP

Present: Chair Leann Pennington *(attended virtually via Microsoft Teams)*, Vice Chair Kim Carney, Commissioners Andrew Dance, Gregory Hansen, Pam Richardson, Interim County Administrator Adam Mengel, County Attorney Michael Rodriguez and Deputy Clerk Tiffani Smith

ITEM 1 - CALL TO ORDER

Vice Chair Carney called the meeting to order at 1:02 p.m. in the Board Chambers of the Government Services Building in Bunnell, Florida.

ITEM 2 - PLEDGE TO THE FLAG AND MOMENT OF SILENCE

Vice Chair Carney led the Pledge to the Flag and requested a moment of silence.

ITEM 3 – COUNTY ADMINISTRATOR APPLICANT REVIEW
A. – FACM REVIEW COMMITTEE REPORT

Vice Chair Carney noted that the county administrator applicant review, performed by the Florida Association of County Managers (FACM), have been provided in the commissioners' notebooks and was previously reviewed at the last workshop.

Charlie Picano, HR Director, provided a brief overview of the interview format. Stated that six interviews were planned, each approximately 45 minutes in duration. Added each commissioner would ask one question, in order by district, with a final closing question.

ITEM 4 – COUNTY ADMINISTRATOR APPLICANT PANEL INTERVIEWS

A. 1:00 P.M. -- RICHARD READE

B. 1:45 P.M. -- TRACY MILLER

C. 2:30 P.M. -- THOMAS HUTKA

D. 3:15 P.M. -- SHAWN BOATRIGHT

E. 4:00 P.M. -- STANLEY HAWTHORNE

F. 4:45 P.M. -- AARON VAN KLEECK

Item 4a – Interview of Richard "Rich" Reade

Commissioner Dance asked Mr. Reade to briefly share his background and highlight the leadership roles that best qualify him for county administrator position in Flagler County.

UNOFFICIAL

(Item 4a – Continued)

Mr. Reade stated that he has served in local government at both the municipal and county level for over 30 years. Described his leadership philosophy as collaborative, emphasizing an open-door policy and bringing staff together to work collectively on issues.

Commissioner Hansen asked Mr. Reade what the toughest feedback he ever received was and how he used it to change the way he leads.

Mr. Reade responded that the most difficult feedback comes from elected officials or customers who express that expectations were not met. Stated that such feedback allows him to reassess organizational processes. Emphasized the importance of constant evaluation rather than remaining stagnant.

Commissioner Carney noted that Flagler County's mission emphasizes excellence, integrity, collaboration with cities, and fiscal stewardship. Asked Mr. Reade how he has embodied those values in past leadership roles.

Mr. Reade stated that he currently serves as president of the Palm Beach County Managers Association. Emphasized the importance of relationship building between municipalities and the county, and with constitutional officers. Mr. Reade noted that his current organization recently completed a 10% budget reduction.

Chair Pennington asked Mr. Reade about his relevant project management experience as it relates to capital improvement projects. Asked how he would help the Board prioritize big-ticket capital improvement needs.

Mr. Reade shared that he dealt with beach renourishment and dune restoration issues in Delray Beach. Noted that in Okeechobee County, the public works department managed approximately 40 capital projects. Stated that he has brought in over $100 million in grants over his career for capital project funding. He cited important funding sources.

Commissioner Richardson asked Mr. Reade what strategies he uses to work effectively with elected officials who may have differing viewpoints.

Mr. Reade described providing a weekly update, along with a calendar of upcoming events for the next several weeks. Stated he prefers weekly one-on-one meetings with each elected official. Explained that agendas should explain the who, what, where, when, and why. Spoke about contacting the BOCC if an issue arises.

Commissioner Carney asked whether Mr. Reade had any questions for the Board or anything else he wished to share.

UNOFFICIAL

(Item 4a – Continued)

Mr. Reade shared that he is a member of ICMA and the FCCMA, currently serving on the FCCMA board of directors. Noted that his experience as both a city manager and a county employee gives him a unique perspective. Commented on the benefits of his experience working in the private development sector. Asked the BOCC what they are looking for in their next County Administrator.

Commissioner Carney indicated the BOCC would respond individually in district order.

Commissioner Dance stated the BOCC is looking for strong leadership, ethics, communication skills, and someone who can bring the five board members together. Emphasized the importance of relationship building with other organizations and intergovernmental cooperation with cities.

Commissioner Hansen stated that the County has a leadership program for staff that works best when leaders delegate authority rather than micromanage.

Commissioner Carney stated she is looking for someone unafraid to change the culture, who can examine processes and departmental efficiency from an outside perspective. Explained communication must be a priority and that attention to the 10% budget reduction process is needed.

Chair Pennington stated that Flagler County is diverse, with a significant agriculture community and coastal challenges. Noted the importance of understanding infrastructure needs including dirt roads and eroding beaches and working creatively when funding is limited.

Commissioner Richardson stated she values respect, transparency, and team building for all staff. Emphasized that while the BOCC is diverse in perspective, members respect each other and want positive public perception maintained.

Commissioner Carney informed Mr. Reade that the BOCC would be meeting after interviews to develop a short list and that HR would be in touch.

Mr. Reade thanked the BOCC.

Item 4b – Interview of Tracy Miller

Mr. Picano introduced the interview format for Ms. Miller, noting the same five-question structure with a final wrap-up question.

Commissioner Dance asked Ms. Miller to briefly share her background and highlight the leadership roles that best qualify her for county administrator in Flagler County.

UNOFFICIAL

(Item 4b – Continued)

Ms. Miller stated that she spent the first 20 years of her career working for a nonprofit, now known as the Alliance for Innovation. Added she then worked for Sarasota County for 10 years and subsequently served as assistant city manager in both Oldsmar and the City of Bartow. Noted that Flagler County's budget falls between the City of Bartow's and Sarasota County's budget, and its staffing is like Bartow. Explained that her experience with coastal issues, innovation, and budgeting equips her for the position.

Commissioner Hansen asked Ms. Miller what the toughest feedback she personally received was and how it changed her approach to leadership and management.

Ms. Miller stated she learned strategic planning one way but encountered a county administrator who used a different consultant-driven model. Shared that after approximately a year and a half of working with that model, the commission preferred her approach. Noted that the experience taught her the willingness to adapt, incorporating the strengths of the consultant's annual action plan model with her own methodology.

Commissioner Carney asked Ms. Miller how she has embodied the county commission's mission values of excellence, integrity, collaboration with cities, and fiscal stewardship in past leadership roles.

Ms. Miller stated she is passionate about mission and vision and believes employees must be able to live those values. Shared that she had drafted suggested refinements to Flagler County's mission statement based on the strategic plan. Stated she has consulted with other governments to develop performance management and strategic planning programs.

Commissioner Dance asked a follow-up question regarding the difference between advising a county as a consultant versus implementing as an administrator.

Ms. Miller noted that a consultant has no authority over implementation and that execution is up to the organization. Stated that implementation execution has always been her strength, whether from a technology perspective, plan development, reporting, or communication.

Chair Pennington asked Ms. Miller about her relevant project management experience and how she would help the BOCC prioritize big-ticket capital improvement needs.

Ms. Miller shared that in Sarasota County, she managed a strategic plan balancing organizational projects with approximately 100 capital projects from start to finish. Explained she would like to implement a public-facing dashboard demonstrating capital project progress monthly. Commented on the dashboards she built in both Bartow and Sarasota County remain live and in use.

UNOFFICIAL

Commissioner Richardson asked Ms. Miller what strategies she uses to work effectively with elected officials who may have differing viewpoints.
(Item 4b – Continued)

Ms. Miller stated that consensus building is key, requiring established rapport between herself and each commissioner. Emphasized being well prepared to brief commissioners in advance of big decisions. Emphasized the importance of allowing the administrator to run the organization while being held accountable for results.

Commissioner Carney asked Ms. Miller if she had any questions for the BOCC or anything else she wished to share.

Ms. Miller expressed appreciation for the opportunity. Asked the BOCC how quickly they would want to seat a county administrator.

Commissioner Carney stated the BOCC would finish interviews and develop a short list that afternoon, followed by background checks.

Mr. Picano noted that the week originally slated for in-person interviews was August 24–25 but those dates may need to be adjusted.

Commissioner Carney indicated she would be back by August 27–28, with the goal of completing the process by the end of August or the first week of September.

Ms. Miller acknowledged that the fiscal year begins October 1 and most budget decisions would be made by then. Stated she would want to be well equipped but was flexible on timing.

Commissioner Carney confirmed the budget process is essentially complete, and public hearings are scheduled for September 3 and approximately September 14. Thanked Ms. Miller for her time and indicated HR would be in touch.

Item 4c – Interview of Thomas "Tom" Hutka

Mr. Picano introduced the interview format for Mr. Hutka, noting the same structure of one question per commissioner followed by a wrap-up question.

Commissioner Dance noted Mr. Hutka's 11 years in Broward County as public works director and the connection that many Broward County residents have relocated to Flagler County. Asked Mr. Hutka to briefly share his professional background and how his experience has prepared him to address the opportunities and challenges facing Flagler County.

Mr. Hutka shared that he studied civil engineering, obtained a master's degree in public administration, and worked as a civil engineer with clients primarily in state and local

UNOFFICIAL

government. Added he then worked on Wall Street rating municipal bonds and has worked for three counties in Florida, Hillsborough, Osceola, and Broward.

(Item 4c – Continued)

Commissioner Hansen asked Mr. Hutka what the toughest feedback he received during his varied career was and how he turned it into making him a better leader or manager.

Mr. Hutka stated that as an engineer, the math is either right or wrong, but becoming a manager, working in local government, and navigating new family relationships taught him that he was not always right and it made him a better leader.

Commissioner Carney asked Mr. Hutka how he has embodied the values of excellence, integrity, collaboration with cities, and fiscal stewardship in past leadership roles.

Mr. Hutka emphasized that results matter more than years of experience. Cited his time as city manager in Michigan. Credited the achievements to partnering with all stakeholders, working well with the team, and watching fiscal constraints.

Chair Pennington asked Mr. Hutka about his relevant project management experience for capital improvement projects and how he would help the Board prioritize big-ticket capital improvement needs.

Mr. Hutka stated he still maintains his Florida professional engineering license, along with construction inspection and Wall Street experience in funding capital projects. Explained in Osceola County, he oversaw the design, land acquisition, environmental remediation, construction, and ribbon cutting of a 900-bed jail.

Commissioner Dance asked a follow-up question in regard to balancing growth with natural resource protection in Broward County.

Mr. Hutka described ending the dumping of raw sewage into the ocean from Broward's wastewater plant. Shared a multi-jurisdictional stormwater recharge project using an abandoned rock quarry in a public-private partnership to capture rainfall and recharge the water system. Noted three beach renourishments during his tenure. Described retiming signalized intersections in Broward County which reduced total air pollution and reduced travel times. Added that every building constructed during his tenure was LEED-certified Gold or Platinum.

Commissioner Richardson asked Mr. Hutka what strategies he uses to work effectively with elected officials who may have differing viewpoints.

Mr. Hutka stated he values differing viewpoints as healthy. Emphasized on communication.

UNOFFICIAL

Commissioner Carney asked Mr. Hutka if he had questions for the BOCC or anything else to share.

(Item 4c – Continued)

Mr. Hutka asked the BOCC what the big visible projects or special programs are, and what are the day-to-day services needing improvement.

Commissioner Carney spoke about beach renourishment and the beach management plan. Complimented Flagler County staff.

Commissioner Hansen spoke about the need to revisit the strategic plan, which has not been updated. Stated that looking for process improvements and preparing for the 10% budget exercise related to state legislative requirements would be major priorities in the coming year.

Mr. Hutka shared his experience as city manager in Port Huron, Michigan, when the state cut revenue sharing.

Commissioner Richardson stated the importance of transparency, robust onboarding for new commissioners, and quality of life.

Mr. Hutka commented on his satisfaction from creating a work environment that staff enjoy.

Commissioner Carney thanked Mr. Hutka for his time.

Item 4d – Interview of Shawn Boatright

HR Director Picano introduced the interview format for Mr. Boatright, noting the same structure.

Commissioner Dance thanked Mr. Boatright for his military service. Asked Mr. Boatright to briefly share his professional background and how his experience has prepared him to address the opportunities and challenges facing Flagler County.

Mr. Boatright stated he grew up in Georgia, except for his time in the Marines. Credited the Marine Corps with developing his leadership skills, particularly his service as a foreign adviser to the Afghan National Army. Stated that his time as county administrator in Camden County, Georgia and in Glynn County provided experience with coastal challenges including resiliency operations, hurricane emergency operations, financial issues, and infrastructure needs.

Commissioner Dance asked a follow-up regarding concerns about Florida being significantly different from Georgia in terms of legislative processes and laws.

UNOFFICIAL

Mr. Boatright responded that the processes are quite similar between the two states and does not see it as a large challenge. Additionally noted that Amendment Three is a significant challenge facing Florida local governments and that Georgia is addressing similar issues. Cited shared challenges with data centers, infrastructure needs, tourism, and flock cameras.
(Item 4d – Continued)

Commissioner Hansen thanked Mr. Boatright for his service. Asked what the toughest feedback he ever received was and how it changed the way he leads or manages.

Mr. Boatright shared that one of the biggest challenges in Camden County is the financial need for capital projects. Noted that the commission developed an aggressive strategic plan encompassing large capital projects that exceeded available financial means. Explained he is focused on fiscal policy and taking care of citizens.

Commissioner Carney asked Mr. Boatright how he has embodied the values of excellence, integrity, collaboration with cities, and fiscal stewardship in past leadership roles.

Mr. Boatright described leading discussions for the Special Local Option Sales Tax and building strong relationships with constitutional officers. Shared that his team secured approximately $6 million from the Department of Community Affairs and $1.2 million from Congressman Carter's office to build a resiliency operations center.

Chair Pennington asked Mr. Boatright about his relevant project management experience for capital improvement projects and how he would help the Board prioritize big-ticket capital improvement needs.

Mr. Boatright described managing numerous capital projects. States he is familiar with FAA guidelines on both the aviation and space sides. Described innovative road preservation methods and noted he had visited Flagler County to observe beach stabilization efforts.

Commissioner Dance asked Mr. Boatright what project management looks like in practice.

Mr. Boatright spoke about his experience in project management both personally and through a dedicated project manager.

Commissioner Richardson asked Mr. Boatright what strategies he uses to work effectively with elected officials who may have differing viewpoints.

Mr. Boatright stated that understanding each commissioner's communication needs is essential. Spoke about providing staff with the resources to do their jobs. Described himself as the communication lynchpin between the BOCC, staff, and citizens. Stated his preference for in-person meetings and described an administrative brief he developed in Camden County. Emphasized working closely with the CFO to keep commissioners informed of financial status, project status, and any hurdles requiring attention. Stated his Marine Corps background instilled strong adaptability.

UNOFFICIAL

Commissioner Carney asked Mr. Boatright if he had questions for the BOCC or anything else to share.

(Item 4d – Continued)

Mr. Boatright asked how the Board perceives relations among themselves and with their constitutional officers.

The BOCC spoke about their relations with the constitutional officers and themselves.

Mr. Boatright then addressed strategic planning. Asked whether the BOCC feels strategic planning is an area of strength or need.

The BOCC agreed the Strategic Plan has not been updated.

Mr. Boatright asked what accomplishments would make each commissioner say that hiring him was the best decision the BOCC ever made.

Commissioner Carney responded by saying a funded beach management plan.

Commissioner Dance emphasized continuing the county's reputation for environmental preservation and its environmentally sensitive lands program, as well as expanding passive park access.

Mr. Boatright shared that Camden County has one of the most protected pieces of land in the nation with Cumberland Island and works closely with the National Park Service, EPA, and state agencies on environmental issues.

Commissioner Carney noted that Flagler County has the longest preserved section of brick road and that an initiative is underway to protect that area as a park. Informed Mr. Boatright that following interviews, the BOCC will hold a special meeting.

Mr. Boatright thanked the BOCC.

Item 4e – Interview of Mr. Stanley Hawthorne

Mr. Picano introduced the interview format for Mr. Hawthorne, noting the same structure.

Commissioner Dance asked Mr. Hawthorne to briefly share his professional background and how his experience has prepared him to address the opportunities and challenges facing Flagler County.

UNOFFICIAL

Mr. Hawthorne stated he is a Florida native who moved to Alabama, attended college in Alabama, and earned his graduate degree from the University of Virginia. Identified Broward County, where he spent most of his career, and his eight years with the City of Fort Lauderdale

(Item 4e – Continued)

as the closest parallels to Flagler County. Referenced familiarity with beach nourishment issues, the strategic plan, general plan, and beach nourishment plan.

Commissioner Dance stated Mr. Hawthorne's experience is uniquely all municipal government and asked how he would transition to a constitutional county government.

Mr. Hawthorne drew a parallel to his experience as town manager of Bloomfield, Connecticut, where the town government fulfilled both municipal and county functions.

Commissioner Hansen asked Mr. Hawthorne what the toughest feedback he received was and how he turned it into making his leadership better.

Mr. Hawthorne stated he has learned to be aware of weaknesses and turn them into strengths. Spoke about taking criticism of performance scores and turning it into the very best he can be.

Commissioner Carney asked Mr. Hawthorne how he has embodied the values of excellence, integrity, collaboration with cities, and fiscal stewardship in past leadership roles.

Mr. Hawthorne described his experience developing core values for the City of Fort Lauderdale employees.

Chair Pennington asked Mr. Hawthorne about his relevant project management experience for capital improvement projects and how he would help the Board prioritize big-ticket capital improvement needs.

Mr. Hawthorne described adopting in Fort Lauderdale the practice of establishing a charter for each major capital project, detailing the vision, players, interactions, cost factors, and a business plan. Stated that capital projects should actively fulfill the community's vision with the staff serving as the community-building team ensuring effective delivery.

Commissioner Richardson asked Mr. Hawthorne what strategies he uses to work effectively with elected officials who may have differing viewpoints.

Mr. Hawthorne spoke about good communication. Stated that the better educated commissioners are from staff work, the more effective their direction will be.

Commissioner Carney asked Mr. Hawthorne if he had questions or anything else to share.

UNOFFICIAL

Mr. Hawthorne stated that HR staff had been helpful and informative. Indicated he is doing substantial homework and finds Flagler County's issues engaging.

(Item 4e – Continued)

Commissioner Dance asked whether anything stands out in his research as a particular challenge or opportunity.

Mr. Hawthorne spoke about the beach nourishment plan and organizational structure. Shared his experience doing organizational evaluations at the City of Hollywood. Suggested that an internal audit division reporting to the governing body could provide ongoing organizational oversight.

Commissioner Carney informed Mr. Hawthorne of the short list process and timeline.

Mr. Hawthorne thanked the Board and departed.

Item 4f – Interview of Aaron Van Kleeck

HR Director Picano introduced the interview format for Mr. VanKleeck, noting the same structure and that he is the final candidate for the day.

Commissioner Dance noted the interesting rise through the ranks at Volusia County shown on Mr. Van Kleeck's résumé and acknowledged the close relationship between the neighboring counties. Asked Mr. Van Kleeck to briefly share his professional background and how his experience has prepared him to address the opportunities and challenges facing Flagler County.

Mr. Van Kleeck spoke about his professional background and position history. Added he completed a bachelor's degree in business with a concentration in public sector and obtained his MBA. Stated he also served part-time as sports director for the Volusia-Flagler YMCA. Explained he knows government from the ground up and has knowledge of many different positions and roles.

Commissioner Dance asked whether Mr. Van Kleeck is ready to have five different bosses.

Mr. Van Kleeck stated he works well with the current seven-member council and prior councils in Volusia County.

Commissioner Hansen asked Mr. Van Kleeck what the toughest feedback he received during his time at Volusia County was and how he turned it into a positive.

Mr. Van Kleeck stated he has always been open to growth and never views feedback as critical. Cited the example of approaching a director (now county manager) about advancement and

UNOFFICIAL

being told to go back to school. Stated he did not take that as a negative about his education level, but rather as an opportunity to grow further.

(Item 4f – Continued)

Commissioner Carney asked Mr. Van Kleeck how he has embodied the values of excellence, integrity, collaboration with cities, and fiscal stewardship in past leadership roles.

Mr. Van Kleeck stated he is transparent and factual. Described his role when Volusia County's constitutional officers transitioned from reporting to the county manager to becoming independent offices. Shared that he has spoken at various chamber events to educate the public.

Chair Pennington asked Mr. Van Kleeck about his relevant project management experience for capital improvement projects and how he would help the Board prioritize big-ticket capital improvement needs.

Mr. Van Kleeck emphasized that the board sets policy and direction, and his job would be to carry it out. Spoke about his experience managing capital projects at both the frontline level and the fiscal level. Stated the importance of assembling the right project management team.

Commissioner Richardson asked Mr. Van Kleeck what strategies he uses to work effectively with elected officials who may have differing viewpoints.

Mr. Van Kleeck stated that differing viewpoints are part of the job. Described his approach and stated he provides facts from every angle. Added he promotes collaboration and the team approach to decision-making.

Commissioner Carney asked Mr. Van Kleeck if he had questions or anything else to share.

Mr. Van Kleeck asked what the BOCC is looking for in an ideal candidate.

Commissioner Dance acknowledged that other applicants have prior assistant or management experience while Mr. Van Kleeck does not and asked him to explain why he is ready.

Mr. Van Kleeck stated that while he has never held the title, he runs a department of over 500 employees with an operating budget exceeding $100 million and previously managed the entire billion-dollar budget for Volusia County. Emphasized his extensive Florida experience and strong references.

Commissioner Dance asked Mr. Van Kleeck how he would approach balancing growth, infrastructure, and natural resource preservation.

UNOFFICIAL

Mr. Van Kleeck stated the importance of working with neighboring counties on shared issues, reviewing existing drainage and infrastructure studies, leaning on Flagler County's existing staff expertise, and providing the BOCC with facts to inform direction. Additionally proposed developing an Interlocal Service Boundary Agreement (ISBA) with Palm Coast and Flagler Beach to establish a pre-existing framework for annexation decisions.
(Item 4f – Continued)

Commissioner Dance asked whether Mr. Van Kleeck has a specific mentor.

Mr. Van Kleeck identified George Recktenwald, Volusia County Manager, and former County Manager Jim Dinneen.

Commissioner Hansen asked about Mr. Van Kleeck's leadership style on the spectrum between micromanagement and hands-off delegation.

Mr. Van Kleeck stated he would never be a micromanager. Described a hands-on approach to learn what is happening in the field and support staff.

Commissioner Carney asked how Mr. Van Kleeck builds the right team.

Mr. Van Kleeck stated he looks for people who are the opposite of him, who will counteract his perspective and are not afraid to tell him when he is wrong. Spoke about building teams with complementary skill sets where members are willing to learn from each other and grow together.

Commissioner Richardson commended Mr. Van Kleeck's and expressed appreciation.

Mr. Van Kleeck concluded by noting he is aware of the property tax reform challenges and is prepared to help the Board navigate those challenges.

Commissioner Carney thanked Mr. Van Kleeck for his time.

ITEM 5 – PUBLIC COMMENT

None

THIS SPACE INTENTIONALLY LEFT BLANK

UNOFFICIAL

ITEM 6 – ADJOURNMENT

The meeting was adjourned by consensus at 3:42 p.m.

APPROVED AND ADOPTED _____

ATTEST:

FLAGLER COUNTY BOARD OF COUNTY COMMISSIONERS

_____
Tom Bexley
Clerk of the Circuit Court & Comptroller

_____
Leann Pennington
Chair

UNOFFICIAL

FLAGLER COUNTY BOARD OF COUNTY COMMISSIONERS

AUGUST 10, 2026

SPECIAL MEETING

Present: Chair Leann Pennington *(attended virtually via Microsoft Teams)*, Vice Chair Kim Carney, Commissioners Andrew Dance, Pam Richardson, Gregory Hansen, Interim County Administrator Adam Mengel, County Attorney Michael Rodriguez, and Deputy Clerk Tiffani Smith

ITEM 1 - CALL TO ORDER

Vice Chair Carney called the meeting to order at 5:30 p.m. in the Board Chambers of the Government Services Building in Bunnell, Florida.

ITEM 2 – DISCUSSION TO SHORT-LIST COUNTY ADMINISTRATOR APPLICANTS

BOCC discussion ensued regarding ballot scoring.

There was BOCC consensus to enter an "X" on the ballot for the top three choices instead of scoring the candidates from one to three.

Charlie Picano, HR Director, announced the following ballot selections *(Ballots on file with the Clerk's Office)*:

- Commissioner Dance selected:
  - Shawn Boatright
  - Tracy Miller
  - Aaron Van Kleeck
- Commissioner Hansen selected:
  - Tracy Miller
  - Richard Reade
  - Aaron Van Kleeck
- Commissioner Carney selected:
  - Shawn Boatright
  - Tracy Miller
  - Richard Reade
- Commissioner Richardson selected:
  - Shawn Boatright
  - Thomas Hutka
  - Richard Reade
- Commissioner Pennington selected:
  - Shawn Boatright
  - Aaron Van Kleeck
  - Thomas Hutka

Shawn Boatright – 4 Votes
Tracy Miller – 3 Votes
Aaron Van Kleeck – 3 Votes
Richard Reade – 3 Votes
Thomas Hutka – 2 Votes
Stanley Hawthorne – 0 Votes

There was BOCC discussion regarding the tie vote between Miller, Reade, and Van Kleeck.
(Item 2 – Continued)

There was BOCC consensus to bring back the following top four selected applicants for County Administrator interviews:

- **Shawn Boatright**
- **Tracy Miller**
- **Aaron Van Kleeck**
- **Richard Reade**

Mr. Picano proposed a two-day interview period, with the first day being one-on-ones with the BOCC and a meet and greet that night, with a Special Meeting to follow the next morning. Added that the BOCC can also interview the candidates publicly and make their selections.

Commissioner Hansen asked for clarification on the public in-person interviews.

Mr. Picano explained public in-person interviews will be similar to how the BOCC previously performed the County Attorney interviews.

There was extensive BOCC discussion on the amount of interview days, interview format, and interview questions.

There was BOCC consensus to bring the candidates in for county administrator interviews for two days, with one-on-one meetings on September 3rd and public interviews on September 4th.

Mr. Picano asked the BOCC if they want the public meeting to be in the morning or afternoon.

Commissioner Carney suggested Mr. Picano ask the applicants if they want a tour.

Mr. Picano commented on the meeting times for September 3rd and September 4th.

There was BOCC discussion on the meeting times.

There was BOCC consensus to have a Special Meeting on September 3rd for the TRIM Public Hearing and public interviews, with a meeting to follow the next morning, September 4th, to select a county administrator.

ITEM 3 – ADJOURNMENT

The meeting was adjourned by consensus at 5:58 p.m.

(Item 3 – Continued)

APPROVED AND ADOPTED _____

ATTEST:

FLAGLER COUNTY BOARD OF
COUNTY COMMISSIONERS

_____
Tom Bexley
Clerk of the Circuit Court & Comptroller

_____
Leann Pennington
Chair

UNOFFICIAL

FLAGLER COUNTY BOARD OF COUNTY COMMISSIONERS

AUGUST 17, 2026

WORKSHOP

Present: Chair Leann Pennington, Vice Chair Kim Carney, Commissioners Andrew Dance, Gregory Hansen, Pam Richardson, Interim County Administrator Adam Mengel, County Attorney Michael Rodriguez and Deputy Clerk Tiffani Smith

ITEM 1 - CALL TO ORDER

Chair Pennington called the meeting to order at 1:00 p.m. in the Board Chambers of the Government Services Building in Bunnell, Florida.

ITEM 2 - PLEDGE TO THE FLAG AND MOMENT OF SILENCE

Chair Pennington led the Pledge to the Flag and requested a moment of silence.

ITEM 3 – WELCOME: FLAGLER COUNTY BOARD CHAIR

A. LIBRARY BOARD OF TRUSTEES ANNUAL REPORT AND OVERVIEW

B. COMMUNITY ROOM @ NEXUS DISCUSSION

C. FY 2026-27 BUDGET DISCUSSION

Chair Pennington welcomed everyone. Introduced Holly Albanese, Flagler County Library Director and former Commissioner Donald O'Brien.

Item 3a – Library Board of Trustees Annual Report Overview

Mr. O'Brien delivered the Library Board of Trustees Annual Report and presented on several matters involving the library including the following topics:

- Exceptional performance of passport services program
- Growth in community programming participation
- 2025 Library Service Statistics
- Nexus Community Center
- Photographs documenting the setup and grand opening of the Nexus Center
- Usage Statistics 7-month Comparison
- Community Room Revenue and Usage
- Financial Performance
- Programs & Community Engagement
- Musical Gardens and overall services available at the library
- Updates to the Library Website// Online Engagement// Statistics
- West Side of Library Proposed Site Plans

(Presentation on file with the Clerk's Office.)

There was BOCC discussion regarding the plans for the West Side of the Palm Coast Library and funding eligible for the project.

UNOFFICIAL

(Item 3 – Continued)

Ms. Albanese clarified needs of the Palm Coast Library and the need for expansion/ renovation.

Chair Pennington noted that impact fees would also be beneficial to apply to HVAC needs.

Mr. O'Brien continued the Library Board of Trustees Annual Report and spoke the following topics:

- Overall Survey Results

Noted that the Board of Trustees remains committed to providing a world-class library system for Flagler County.

Commissioner Richardson inquired on passport services pricing.

Ms. Albanese clarified the passport application fees, including adult and youth pricing and facility fees, noting that additional fees apply depending on the services requested, and outlined the specific revenue the library receives per application.

Commissioner Dance referenced a prior commitment made to the City of Palm Coast regarding a survey and attendance comparison between library locations and inquired whether those comparative results would be shared with the City of Palm Coast.

Ms. Albanese shared survey results and community feedback specific for the Palm Coast Library including hours. Days of operations, and passport services. and explained there will be more observance over the following year.

Commissioner Dance proposed sharing the Palm Coast library statistics and feedback at the next joint meeting with Palm Coast.

There was BOCC discussion on the function and revenue gained from the Friends of the Library bookshop.

Ms. Albanese clarified that usage of the library includes residents coming for voting and tax services.

(Item 3 – Continued)

Item 3b – Nexus Community Center – community room overview and recommendations

Holly Albanese, Library Director, presented an overview of the Nexus Center community room operations and rental fee recommendations. *(Presentation on file with the Clerk's Office.)* Distributed a community room brochure and layout guide to the BOCC. The presentation touched on Community room operations and data including:

- Nexus Center Community Room Current fee schedules
- Comparison of rates to Palm Coast Community Center
- Event Planning Services
- Marketing
- Community Room Usage

Commissioner Richardson noted that offering monthly could help attract additional business during slower periods

Commissioner Carney expressed concern about whether the room rental program is breaking even Noted that Ms. Albanese is performing the duties of an event director in addition to her role as Library Director, including emails, vendor coordination, invoicing, setup oversight, and on-site presence during events. Requested a time study to be conducted to document the actual staff hours, and employee resources required for each event in order to determine the true cost of operating the room.

Ms. Albanese clarified the current staffing model, noting that during weekday events, library staff assist with setup; for evening and weekend events, General Services sets up the room during regular business hours, and she is present on site during the event.

Chair Pennington agreed with Commissioner Carney that a time study could be beneficial.

Commissioner Dance stated that input from General Services Director Mike Dickson regarding the impact on his department's staffing would be beneficial as part of any staffing analysis.

Ms. Albanese confirmed she had previously spoken with Mr. Dickson.

There was continued BOCC discussion regarding Community Room usage, fee pricing, and a formal policy governing reduced or waived fees for County entities.

Chair Pennington summarized the takeaways from the discussion, noting that the BOCC appeared comfortable with the revised fee schedule as presented, and directed to continue looking at usage of the community rooms and staff time being used to support the services.

UNOFFICIAL

There was continued BOCC discussion on staff hours for special events.

(Item 3 – Continued)

There was BOCC consensus that the revised community room fee schedule and updated policy would be brought back for formal approval at the second meeting in September 2026.

Item 3c – FY 2026–2027 budget discussion

Brian Eichinger, Financial Services, delivered a presentation continuing the FY2026-2027 budget discussion. *(Presentation on file with the Clerk's Office.)* Highlighted the following:

- Prior & Upcoming Meeting Dates
- Strategic Priorities
- Previous History of Millage Rates

Commissioner Carney observed that while the millage rate has decreased, taxable values have increased.

Mr. Eichinger continued the FY2026-2027 budget presentation. Spoke on the following slides:

- Proposed Millage Rates for FY 26-27
- Advertising Requirements
- Constitutional Officers

Commissioner Richardson requested clarification that all constitutional officers have reduced their cost-of-living adjustment to 2.3%

Mr. Eichinger replied affirmatively.

Commissioner Carney reviewed the constitutional officer budget figures and expressed concern that the reductions achieved primarily reflect the removal of the higher COLA and merit increases from the original submissions rather than true operational cuts.

Mr. Eichinger directed the BOCC where they can find the additional decrease from the constitutionals.

Chair Pennington outlined the County's financial pressures, including cash flow tied up in beach-related projects, required matches for Black Branch, an animal shelter, animal control issues, a potential structural issue at the fairgrounds, the Expo Center and fire stations coming online, and anticipated property value decreases and possible state tax reform. Noted the results shown were not as excepted.

Commissioner Carney she would like to see the Clerk of Court’s budget increase closer to 5% than 9%.

UNOFFICIAL

(Item 3 – Continued)

Chair Pennington reiterated that she is surprised by the numbers provided by the Clerk of Court's reductions. Proposed that a additional $125k needs to be reduced from the Clerk of Courts budget.

There was extensive BOCC discussion regarding the budget increase requests made by the Clerk of Court's budget.

Commissioner Carney explained that she must vote against the entire budget, despite disagreeing with only one portion of it. Stated she would like to see an updated budget here County staff are making a minimum of $20 an hour.

Commissioner Carney stated she would like a consensus to get the Clerk of Court's budget limited to a 5% increase.

Chair Pennington noted she is concerned about the Clerk of Courts current budget increase request because she is aware of large cost projects projected to be needed in the future that the money could be allocated for.

Commissioner Carney requested consensus to get the Clerk of Court's budget limited to a 5% increase from the prior year.

There was continued BOCC discussion regarding the budget request by the Clerk of Court's compared to other constitutional officers.

There was BOCC consensus to limit the Clerk of Court's FY27 budget to a 5% increase over the FY26 adopted budget, approximately $223,191, rather than the requested $300,000 increase.

Mr. Eichinger continued the FY2026-2027 budget presentation. Noted that the information will not be entirely correct due to the adjustments that will need to be made regarding the Clerk of Court's budget request being capped at 5%. Spoke on the following topics:

- Constitutional Officers Budgets

Inquired whether the BOCC would like the Clerk of Court's millage rates reduced to reflect the decreased budget request.

There was agreement to have the millage rates reduced to reflect the recent budget adjustments.

UNOFFICIAL

(Item 3 – Continued)

Mr. Eichinger continued the FY2026-2027 budget presentation. Highlighted the following topics:

- Maintenance Obligations of Drainage Basin Districts
- Marineland Acres Special Assessment and Funding Analysis
- FY 2026-27 Budget Anticipated Changes from the Tentative Budget
- FY 27 CIP Capital Preservation

Commissioner Carney inquired how the ball field fencing replacement project moved up the priority list.

Mr. Eichinger confirmed that the project is for the replacement of four fields fencing.

Adam Mengel, Interim County Administrator noted that the project was already an unfunded priority and explained that when an exterior painting project was removed from the CIP, the ball field fencing project was identified as the closest available funded project in dollar amount.

Commissioner Carney and Chair Pennington noted that gutter work was to be completed prior to painting and inquired as to why that project had not yet commenced.

Mr. Mengel stated the gutter project was too expensive and confirmed that staff is working on a modified alternative scope and estimate.

There was continued BOCC discussion regarding the ball field fencing project and the idea to reframe the ball field fencing CIP project as a broader parks and recreation safety and risk improvement budget item.

Mr. Eichinger clarified that the ball field project will still need to meet the CIP policy criteria distinguishing capital projects from routine maintenance, even after receiving staff direction. Shared the five-year CIP and went over the different projects for maintenance or new construction. Further spoke on projects from the CIP FY 2027-2031 that are Projects Pending Grant Awards. Shared CIP FY 2027-2031 Unfunded Engineering Work Program Project Priority List and Unfunded Stormwater Project Priority List. Concluded his segment by naming sharing Unfunded New Construction & Preservation projects and Important Upcoming meeting dates. Provided updates on budget increases and decreases between FY2027 and FY 2026.

Commissioner Richardson inquired if the funding received from beach renourishment was excluding beach management and if the County has received all the money back.

o

UNOFFICIAL

(Item 3 – Continued)

Mr. Eichinger cited several storms that contributed to the need for renourishment and noted that while the County has recouped some funding, full reimbursement has not yet been received. Shared a personnel comparison between the FY2027 and FY 2026 budgets. Clarified that beach management is not the same as CIP. Noted that the TDC upcoming meeting may change some of the funding data being shared. Provided a breakdown of the 8 million dollars for beach funding.

Commissioner Dance raised the importance of providing the BOCC and the public with clear budget comparison data and expressed appreciation for the information being shared in the public workshop setting and asked for the same information to be responded back to a prior email he sent.

Mr. Eichinger stated he will return for the next public meeting September 3rd and the BOCC will have a following meeting on September 17th.

Commissioner Dance stated that for future budget cycles, the BOCC should return to a proportional share distribution model for constitutional officer budget allocation and noted that the BOCC should reestablish that policy framework at the start of the next budget cycle.

ITEM 4 – PUBLIC COMMENT

Chair Pennington opened the floor for public comment.

Raymond Royer, Flagler Beach resident, expressed support for the public library system and advocated for expanded library services. Shared an update on his efforts with the Foundation of Charters of Freedom, stating that if he does not receive a response from the BOCC, he intends to proceed independently and present the plaques and form a public association similar to what Volusia County has done.

Melanie Thompson, Flagler Beach resident, expressed concern about a proposed solid waste rate increase and asked why the vendor is exceeding projected costs. Noted trash trucks are damaging an adjacent sand road, requested the County consider taking over the road, and raised ongoing drainage issues in her area.

Chair Pennington closed public comment.

Mr. Eichinger confirmed that the County's contract with WastePro is not changing. Stated the increase is solely for administrative purposes to update the software, reflecting the addition of new homes or a percentage-based adjustment. Noted that inflation percentages also apply.

UNOFFICIAL

ITEM 5 – ADJOURNMENT

The meeting was adjourned by consensus at 3:19 p.m.

APPROVED AND ADOPTED _____

ATTEST:

FLAGLER COUNTY BOARD OF
COUNTY COMMISSIONERS

_____
Tom Bexley
Clerk of the Circuit Court & Comptroller

_____
Leann Pennington
Chair

UNOFFICIAL

FLAGLER COUNTY BOARD OF COUNTY COMMISSIONERS

AUGUST 17, 2026

REGULAR MEETING

Present: Chair Leann Pennington, Vice Chair Kim Carney, Commissioners Andrew Dance, Gregory Hansen, Pam Richardson, Interim County Administrator Adam Mengel, County Attorney Michael Rodriguez and Deputy Clerk Tiffani Smith

Chair Pennington called the meeting to order at 5:00 p.m. in the Board Chambers of the Government Services Building in Bunnell, Florida.

ITEM 1 - PLEDGE TO THE FLAG AND MOMENT OF SILENCE

Chair Pennington led the Pledge to the Flag and requested a moment of silence.

ITEM 2 - ADDITIONS, DELETIONS AND MODIFICATIONS TO THE AGENDA

Chair Pennington announced the following modifications:

- **Item 9c** – QUASI-JUDICIAL – Project 2026040066 – Request for a Special Use for Telecommunication Tower in the MH-1 (Rural Mobile Home) District at 2512 Orange Street: Continuance requested by the applicant to a time and date certain of September 14, 2026, at 5:30 p.m.

There was BOCC consensus to remove Item 9c from the agenda and allow the item to be continued to September 14, 2026, at 5:30 p.m.

- Addition of Proclamation recognizing August 31, 2026, as International Overdose Awareness Day.
- Item 9a – Additional resident correspondence added to the backup material.

ITEM 3 - ANNOUNCEMENTS BY THE CHAIR

Chair Pennington announced the following upcoming events and meetings:

- Joint Workshop with the City of Palm Coast – August 26, 2026, at 6:00 p.m. at Palm Coast City Hall (160 Lake Avenue) regarding animal control and shelter operations.
- Regular Meeting – September 2, 2026, at 9:00 a.m. in the Board Chambers.
- Special Meeting (County Administrator Candidate Individual Interviews) – September 3, 2026, from 1:00 p.m. to 5:00 p.m. in Government Services Building conference rooms (unrecorded; observation schedule available).
- Special Meeting (TRIM / First Budget Public Hearing & Group Candidate Interviews) – September 3, 2026, at 5:01 p.m. in the Board Chambers, followed immediately by a candidate meet-and-greet.
- Special Meeting (County Administrator Selection Discussion) – September 4, 2026, at 9:00 a.m. in the Board Chambers.

UNOFFICIAL

ITEM 4A – RECOGNITIONS

None

ITEM 4B – PROCLAMATIONS INTERNATIONAL OVERDOSE AWARENESS DAY – AUGUST 31, 2026

Commissioner Dance read the proclamation recognizing August 31, 2026, as International Overdose Awareness Day in Flagler County.

A motion was made by Commissioner Dance to adopt the proclamation. Seconded by Commissioner Hansen.

Chair Pennington called the question. Motion carried unanimously.

Michael Felbower, President of the Flagler County Drug Court Foundation, accepted the proclamation and provided an overview of the organization's recovery support, community education, and distribution of over 8,000 free Narcan boxes to the community, schools, and government offices. Expressed gratitude for continued County support. Announced the annual Overdose Awareness Walk scheduled for August 31, 2026, starting at 6:00 p.m. at Wadsworth Park.

ITEM 4C – PRESENTATIONS

None

ITEM 5A – COMMUNITY OUTREACH

Donna Duval, Palm Coast resident, requested county paving of Old A1A, the primary access road serving 44 property owners in her subdivision. Presented photos of the road conditions. Described washboard conditions, heavy dust, and severe standing water during rainy periods. Noted additional local roads the County has paved.

Joe Golan, Bikemen of Flagler County, noted a previous request to the County Administrator for updates regarding deed restrictions. Appealed to the BOCC to allow the Bikemen of Flagler County to continue local operations.

Rob Derowski, Hammock resident, requested updates and enhanced transparency regarding beach management plans for Reach 3. Noted significant tax contributions from barrier island property owners. Stated there is a lack of communication between the BOCC and residents regarding Reach 3.

UNOFFICIAL

(Item 5a – Continued)

Aurthur Seager, Flagler Beach resident, reported severe drainage runoff and erosion on a newly finalized home site in Eagle Lakes, noting parts of the final survey are not accurate. Provided pictures for the record.

Mr. Felbower, Flagler County resident, spoke in support of Bikemen of Flagler County.

Chair Pennington closed public comment.

Commissioner Hansen explained that water service was previously attended to on Old A1A and that past resident feedback indicated resident opposition to paving.

Chair Pennington added that Old A1A will remain on the County's long-term evaluation list for paving projects.

Commissioner Hansen noted that hard-bottom issue with FDEP needs to be resolved before continuing with Reach 3. Spoke on progress with EPA, rocks on the beach and the status of Reach 3.

Hamid Tabassian, County Engineer, explained that survey work is concluding. Confirmed that hard bottom rocks are being analyzed to see what impacts they will bring. Stated that staff is in coordination to schedule an update with the BOCC through a workshop or regular meeting regarding an update on the survey.

Commissioner Carney inquired about holding a public presentation at MalaCompra Park to share the information with the community.

Commissioner Hansen noted that there is a scheduled Reach 3 presentation at his public town hall meeting scheduled for September 1, 2026, at 6:00 p.m. at MalaCompra Park.

Mr. Tabassian further noted that after a workshop providing survey updates on Reach 3 is held, there will be a comprehensive public involvement plan with Hammock Dunes.

Commissioner Carney asked if there were any scheduled meetings regarding Reach 2 with Beverley Beach and Flagler Beach.

Mr. Tabassian noted that a pre-construction meeting for Reach 2 will take place in January 2027, with construction targeted for mid-February 2027.

Chair Pennington announced that any residents who would like to be notified regarding Eagle Lakes can leave their information with Interim County Administrator Adam Mengel.

UNOFFICIAL

(Item 5a – Continued)

Mr. Mengel reported no update on releasing the ITT property restriction and noted that responsive bids were received for adult daycare operation.

Commissioner Carney added that Bikemen will need to evaluate private property options.

ITEM 5B – BOARD COMMENTS ON CONSENT ITEMS

None

CONSENT AGENDA – ITEMS 6A THROUGH 7M

A motion was made by Commissioner Hansen to approve the Consent Agenda. Seconded by Commissioner Richardson.

Chair Pennington called the question. Motion carried unanimously.

The following items were approved as part of the Consent Agenda:

ITEM 6A – BILLS AND RELATED REPORTS

The report(s) of funds withdrawn from the County depositories by the Flagler County Clerk of the Circuit Court and the Revenue Collected Report presented in compliance with the provisions of Section 136.06, Florida Statutes:

- Disbursement Report for Week Ending July 17, 2026
- Disbursement Report for Week Ending July 24, 2026
- Disbursement Report for Week Ending July 31, 2026
- Revenue Collected Reports amended April 2026
- Revenue Collected Reports amended May 2026
- Revenue Collected Reports amended June 2026

ITEM 6B – APPROVAL OF BOARD MEETING MINUTES

The following minutes were approved as part of the Consent Agenda:

- July 13, 2026, Workshop
- July 13, 2026, Special Meeting
- July 13, 2026, Regular Meeting

UNOFFICIAL

ITEM 7A – APPROVAL OF A RESOLUTION RENAMING A ROADWAY SEGMENT IDENTIFIED AS BROADWATER ROAD TO NEWCASTLE LANE AS SUCH ROADWAY SEGMENT IS DEPICTED ON THE PLAT OF THE SUBDIVISION OF PLANTATION BAY SECTION 2A-F UNIT 12A IN MAP BOOK 43, PAGE 9 AND AUTHORIZATION TO EXPEND GIS DIVISION FUNDS TO REPLACE STREET SIGNS.

The following request was approved as part of the Consent Agenda:

Flagler County Board of County Commissioners
Consent: BOCC Departments / Agenda Item 7.a.

Meeting Date:	August 17, 2026
Department Contact:	Taylor Phillips
Subject:	**Approval of a Resolution Renaming a Roadway Segment Identified as Broadwater Road to Newcastle Lane as such Roadway Segment is Depicted on the Plat of the Subdivision of Plantation Bay Section 2A-F Unit 12A In Map Book 43, Page 9 and Authorization to Expend GIS Division Funds to Replace Street Signs.** Request the Board approve the road renaming resolution and authorize the expenditure of funds to replace the road signs.

Overview/Summary:
Broadwater Road is a new street in Plantation Bay. Roughly nine miles to the southeast, in Ormond Beach within Volusia County, lies Broadwater Drive – which is within the same ZIP code (32174). Though the two streets have different suffixes (Road and Drive), there is a high potential of confusion during a 911 call which could send emergency units to the wrong street.

After conferring with the developer and property owner's association, E911 recommends changing the street name from Broadwater Road to the developer's recommendation of Newcastle Lane as soon as possible. Notification of consideration of this item has been sent to the nine (9) homeowners living on Broadwater Road.

Given that this was an oversight on the County's part, the Tax Collector has agreed to waive the state fees associated with new driver's licenses for those currently living on Broadwater Drive. Additionally, staff recommends that the County pay for replacement of the two existing street signs. The cost for the signs and associated installation is not to exceed $250.

Strategic Plan:
Focus Area: Public Health & Safety
Goal 3 – Improve Public Safety Response and Service Delivery Capabilities

Funding Information:
Funding in an amount not to exceed $250 is included within the GIS Division budget.

Recommendations:
Request the Board approve the road renaming resolution and authorize the expenditure of funds to replace the road signs.

ITEM 7B – APPROVAL OF THE SECOND AMENDMENT TO THE SCHOOL FACILITY PLANNING INTERLOCAL AGREEMENT.

The following request was approved as part of the Consent Agenda:

Flagler County Board of County Commissioners
Consent: BOCC Departments / Agenda Item 7.b.

Meeting Date:	August 17, 2026
Department Contact:	Sean Moylan, County Attorney, Simone Kenny, Senior Planner
Subject:	**Approval of the Second Amendment to the School Facility Planning Interlocal Agreement.** Request the Board approve the Second Amendment to the School Facility Planning ILA.

Overview/Summary:
The County, School Board, and municipalities of Palm Coast, Flagler Beach, and Bunnell entered into the School Facility Planning Interlocal Agreement ("School Planning ILA" or "ILA") in 2022 in accordance with Section 163.3177(5)(h)3., *Fla. Stat.* At the time, the parties were focused on ensuring the staff of the parties, described as the "Working Group" in the ILA, met on a regular basis, not just when schools became overcrowded. Likewise, the parties wished to ensure a committee of elected representatives of the parties, called, "the Oversight Committee," was to meet at specific times each year. As a result, specific meeting dates for the Working Group and the Oversight Committee were included in the ILA.

In the ensuring years, the State of Florida Department of Education ("FDOE") has been delayed in furnishing the School District the District's Tenatative Educational Facilities Plan as well as October enrollment counts. These delays made it impossible for the Working Group, and by extension the Oversight Committee, to meet at the dates required by the ILA. This Second Amendment to the ILA builds flexibility into the meeting dates to accommodate any delays of the FDOE.

The Oversight Committee met on June 11, 2026, and voted unanimously to recommend approval of this amendment.

Strategic Plan:
Focus Area: Effective Government
Goal 2 - Build & Maintain Relationships to Support Effective & Efficient Government.
Obj. EG 2.3: Establish compatible policies, procedures, and other means to operate across county and municipal boundaries.

Funding Information:
N/A

Recommendations:
Request the Board approve the Second Amendment to the School Facility Planning ILA.

ITEM 7C – APPROVAL OF RESIDENTIAL SOLID WASTE INCREASE

The following request was approved as part of the Consent Agenda:

Flagler County Board of County Commissioners
Consent: BOCC Departments / Agenda Item 7.c.

Meeting Date:	August 17, 2026
Department Contact:	Andrew Ferrara, Contract Compliance Officer, Mike Dickson, General Services Director
Subject:	**Approval of Residential Solid Waste Increase.** Request the Board approve the change order with WastePro for residential solid waste to increase the FY 2026 purchase order by $100,000 to cover the remaining expenses. Additionally, approve the contract increase of the not-to-exceed amount from $3,900,000 to $4,500,000 annually.

Overview/Summary:
Per our contract with WastePro an automatic CPI increase of 4.7% became effective June 1, 2026. This increase is based upon the 12-month change in the Bureau of Labor Statistics. To cover the contractual increase, as well as the additional homes built throughout the year, we are requesting an increase in the amount of $100,000 to cover the cost of residential solid waste and any other end-of-year expenditures for the Residential Solid Waste Fund. Additionally, due to the CPI increase and increase of residents serviced, the total annual not-to-exceed amount needs to be increased to $4,500,000 for FY 2027.

Strategic Plan:
Focus Area: Effective Government
Goal 2 – Build & Maintain Relationships to Support Effective & Efficient Government
Objective EG 2.2: Pursue policy, fiscal and legislative options to provide county leaders with the flexibility and tools needed to respond to the challenges associated with a growing community.

Funding Information:
Funding for this contract is included in the Residential Solid Waste Fund (Fund 1405) and paid for through the Residential Solid Waste Special Assessment.

Recommendations:
Request the Board approve the change order with WastePro for residential solid waste to increase the FY 2026 purchase order by $100,000 to cover the remaining expenses. Additionally, approve the contract increase of the not-to-exceed amount from $3,900,000 to $4,500,000 annually.

ITEM 7D – APPROVAL OF AWARD OF $330,000 IN SHIP FUNDING TO PHOENIX CROSSINGS, LLC, AND APPROVAL OF ASSOCIATED SUBORDINATION AGREEMENTS FOR AFFORDABLE HOUSING PROJECT, PHOENIX CROSSINGS.

The following request was approved as part of the Consent Agenda:

Flagler County Board of County Commissioners
Consent: BOCC Departments / Agenda Item 7.d.

Meeting Date:	August 17, 2026
Department Contact:	Joseph Hegedus, Health and Human Services Director, Sarah Spector, County Attorney
Subject:	**Approval of Award of $330,000 in SHIP Funding to Phoenix Crossings, LLC, and Approval of Associated Subordination Agreements for Affordable Housing Project, Phoenix Crossings.** Request the Board approve the SHIP funding award and associated subordination agreements, authorize the Chair to execute the SHIP Rental Development Agreement and subordination agreements, and authorize the County Administrator to execute all necessary documents associated with implementing said contract, including any amendments, within the Administrator's budget authority, and approved as to form by the County Attorney.

Overview/Summary:
The Phoenix Crossings project is a planned garden apartment complex in Bunnell that will serve as an affordable housing project to meet the housing needs of youth aging out of foster care, individuals with disabling conditions, and households with extremely low incomes. The proposed complex consists of 28 units, which will include 12 two-bedroom, one bath units and 16 three-bedroom, two bath units.

The County previously approved subsidizing the cost of constructing four of the proposed units, with $330,000 provided through its 2023/2024 allotment from the State Housing Initiatives Partnership (SHIP) program and $170,000 provided through its allotment of American Rescue Plan Act (ARPA) funds. The Board reviewed and approved the ARPA funding at its October 7, 2024 meeting, the SHIP funding at its November 18, 2024 meeting, as well as subsequent clarifying amendments on January 12, 2026 and February 9, 2026.

The SHIP funds were awarded recognizing funding requirements contained in the 2023-2025 SHIP Local Housing Assistance Plan (LHAP) relative to Small Rental Development Projects. Among those requirements is the project sponsor must ensure that all SHIP-assisted units are occupied by income-eligible tenants no later than June 30, 2026 to ensure statutory compliance with the SHIP expenditure deadline for the 2023-24 fund year allocation. On March 20, 2026, Abundant Life submitted an extension request to the SHIP Rental Development Agreement and the ARPA Subrecipient Agreement, noting several factors leading to delays in project development and completion that would make it impossible to meet the June 30, 2026 deadline.

At the April 20, 2026 Board of County Commissioners meeting, the Board approved the extension request conditioned upon the ARPA Agreement being amended to include a claw back provision requiring return of the ARPA funds previously reimbursed by the

(Item 7d – Continued)

County if building permits are not pulled by September 1, 2026. At that same meeting, the Board also ratified the earlier recorded SHIP Satisfaction of Mortgage and Termination of Declaration of Restrictions, both of which had been recorded prior to the April 20 meeting to assist Phoenix Crossings in securing its main project funding. At its May 18, 2026 meeting, the Board of County Commissioners approved the Assignment and First Amendment to the ARPA Agreement for purposes of including the requested claw back provision.

Now that all conditions precedent have taken place, it is appropriate for the Board of County Commissioners to consider a new SHIP Rental Development Agreement issued in favor of the new project sponsor, Phoenix Crossings, LLC. As with the previous agreement, the replacement agreement provides that the project will be subject to a 30-year affordability period. Four units must be rented to tenants at or below 80% of the area's median income for the entire term. Units must be constructed and occupied by income-eligible tenants by June 30, 2027. At the conclusion of the 30-year affordability period, all obligations will be discharged and released by the County. So that there is no question relative to the status of the earlier-approved SHIP Rental Development Agreement, the new SHIP Agreement specifically recognizes that the earlier agreement is null and void and has Abundant Life joining in the Agreement for purposes of acknowledging same.

While the County was working with Phoenix Crossings on the new SHIP Rental Development Agreement, the LLC secured its main project financing. Those lenders, Florida Housing Finance Corporation and the Florida Community Loan Fund, have both asked that the County agree to subordinate its mortgage to the senior lenders' mortgages. Accordingly, staff is also asking the Board to approve the subordination agreements presented by the lenders, which subordinate position is recognized in the County's mortgage.

Strategic Plan:
Focus Area: Economic Vitality
Goal 4 - Explore Affordable, Workforce and Attainable Housing Options
Objective EV 4.5: Through the State Housing Initiatives Partnership (SHIP) program, provide incentives that enable and preserve affordable homeownership and multifamily housing.
Measure 4.5.1 Create and implement a process to ensure projects are identified and funds are allocated appropriately.

Funding Information:
Funding is included in the FY 25-26 Budget the SHIP Fund 1143.

Recommendations:
Request the Board approve the SHIP funding award and associated subordination agreements, authorize the Chair to execute the SHIP Rental Development Agreement and subordination agreements, and authorize the County Administrator to execute all necessary documents associated with implementing said contract, including any amendments, within the Administrator's budget authority, and approved as to form by the County Attorney.

ITEM 7E – APPROVAL OF AN APPLICATION FOR A FIREFIGHTER CANCER DECON EQUIPMENT GRANT.

The following request was approved as part of the Consent Agenda

Flagler County Board of County Commissioners
Consent: BOCC Departments / Agenda Item 7.e.

Meeting Date: August 17, 2026
Department Contact:
Subject: **Approval of an Application for a Firefighter Cancer Decon Equipment Grant.** Request the Board authorize submission of the application to the Florida Firefighter Cancer Decontamination Equipment Grant Program for acquisition of an SCBA/PPE Multi-Washer and Decontamination Unit.

Overview/Summary:
Flagler County Fire Rescue is requesting Board approval to submit an application to the Florida Firefighter Cancer Decontamination Equipment Grant Program, established under Florida Statute 633.137 and F.A.C. 69A-37.503. This program provides funding to assist fire departments in acquiring equipment designed to reduce firefighter exposure to carcinogens encountered during fireground operations.

This request seeks grant funding for an SCBA/PPE Multi-Washer and Decontamination Unit, a specialized extractor capable of removing hazardous cancer-causing contaminants from self-contained breathing apparatus (SCBA) equipment at a level that standard machines cannot achieve.

An SCBA extractor is an essential piece of equipment for any fire department because it ensures that SCBA components are properly cleaned and decontaminated after emergency responses. During fire operations, SCBA masks, harnesses, and regulators are exposed to smoke, carcinogens, chemical residues, and other hazardous contaminants. Without proper cleaning, these substances can accumulate on equipment and pose long-term health risks to firefighters, as well as reduce the reliability and lifespan of the SCBA units. These washer/decontamination units will allow SCBAs to be cleaned at the stations, reduce transport time for the purpose of deconning, minimize the need for temporary gear exchange, and return firefighters to full protective readiness more quickly.

This grant program provides for 75 percent of the equipment cost being provided by the State of Florida and the remaining 25 percent from the applicant (non-state matching funds). The grant performance period runs July 1, 2026 – June 30, 2027. Matching funds in the amount of $12,283 will be utilized from the FY 2027 Fire Rescue budget, and staff will return to the Board for acceptance and appropriation, if awarded.

Strategic Plan:
Focus Area: Public Health and Safety
Goal 3: Enhance public safety response and service capabilities.
Objective PHS 3.1: Achieve and maintain compliance with local, regional, and national standards using risk-based assessments.
Objective PHS 3.3: Protect life, property, and the environment from the impacts of fire, medical emergencies, disasters, and hazardous materials incidents across current and expanding service areas.

Funding Information:
Funding for the match for this grant will come from the Fiscal Year 2027 budget. If awarded, staff will return to the Board for grant acceptance and to appropriate funding.

Recommendations:
Request the Board authorize submission of the application to the Florida Firefighter Cancer Decontamination Equipment Grant Program for acquisition of an SCBA/PPE Multi-Washer and Decontamination Unit.

UNOFFICIAL

ITEM 7F – APPROVAL OF AN UNANTICIPATED REVENUE RESOLUTION (URR) FOR EMS DISBURSEMENTS FROM THE STATE OF FLORIDA.

The following request was approved as part of the Consent Agenda:

Flagler County Board of County Commissioners
Consent: BOCC Departments / Agenda Item 7.f.

Meeting Date:	August 17, 2026
Department Contact:	Michael Tucker, Fire Rescue Chief
Subject:	**Approval of an Unanticipated Revenue Resolution (URR) for EMS Disbursements from the State of Florida.** Request the Board approve the URR for the State of Florida EMS disbursements.

Overview/Summary:
Fire Rescue has received two (2) EMS disbursements from the State of Florida's Emergency Medical Services Trust Funds per Section 401.113.(1)(a), *Fla. Stat.*, totaling $6,488. These funds are used to enhance emergency medical services within Flagler County. In order to properly account for and utilize the revenue in accordance with county financial procedures, an Unanticipated Revenue Resolution (URR) is required to increase the FY 2026 budget by the amount received.

Florida's County EMS disbursement program allocates a portion of moving violation fines collected under Sec. 318.21, *Fla. Stat.*, to the state's EMS Trust Fund, where 45% of those funds are returned to counties based on their contribution level. As a result, Flagler County receives quarterly EMS disbursements directly tied to moving violation revenues generated within the county.

Strategic Plan:
Focus Area: Public Health & Safety
Goal 3 - Improve Public Safety Response and Service Delivery Capabilities.
Objective PHS 3.3: Protect life, property, and the environment from the effects of fire, medical emergencies, disasters, and hazardous materials accidents to current and expanding service delivery areas.
Objective PHS 3.4: Ensure adequate training, available resources, and current technology to effectively respond to, mitigate, and recover from any local, state, or national event.

Funding Information:
Funds totaling $6,488 will be appropriated with approval of the URR.

Recommendations:
Request the Board approve the URR for the State of Florida EMS disbursements.

ITEM 7G – APPROVAL OF AN UNANTICIPATED REVENUE RESOLUTION (URR) FOR CITY OF FLAGLER BEACH AND FLAGLER COUNTY SCHOOL DISTRICT (FIRE LEADERSHIP ACADEMY).

The following request was approved as part of the Consent Agenda:

Flagler County Board of County Commissioners
Consent: BOCC Departments / Agenda Item 7.g.

Meeting Date:	August 17, 2026
Department Contact:	Michael Tucker, Fire Rescue Chief
Subject:	**Approval of an Unanticipated Revenue Resolution (URR) for City of Flagler Beach and Flagler County School District (Fire Leadership Academy).** Request the Board approve the URR for the City of Flagler Beach and the Flagler County School District reimbursements.

Overview/Summary:
Flagler County Fire Rescue provided assistance to the City of Flagler Beach during its staffing transition in April and May of 2026. During this period, the Flagler Beach Fire Department experienced a substantial number of resignations, resulting in staffing shortages that left the department unable to fully staff its emergency response apparatus. In response, Flagler Beach officials requested that Flagler County provide personnel support to fill critical vacancies until new staff were hired and agreed to reimburse all associated personnel costs. These reimbursed personnel costs were:
- April 2026 Reimbursement - $10,284
- May 2026 Reimbursement - $12,594

On July 25, 2023, Flagler County signed the Second Amendment to the Memorandum of Understanding (MOU) for the Flagler Palm Coast High School Leadership Fire Academy where the Flagler County School District agreed to reimburse the County for seventy-five percent (75%) of the Lead Instructor's annual salary and benefits. These reimbursement amounts were:
- School Year 2025/2026 - 1st Semester - $46,350
- School Year 2025/2026 - 2nd Semester - $46,350

In order to properly account for and utilize the revenue in accordance with county financial procedures, an Unanticipated Revenue Resolution (URR) is required to increase the FY 2026 budget by these respective reimbursement amounts received.

Strategic Plan:
Public Health & Safety
Goal 3 - Improve Public Safety Response and Service Delivery Capabilities.
Objective PHS 3.3: Protect life, property, and the environment from the effects of fire, medical emergencies, disasters, and hazardous materials accidents to current and expanding service delivery areas.

Funding Information:
Funds totaling $115,578 will be appropriated with approval of the URR.

Recommendations:

Request the Board approve the URR for the City of Flagler Beach and the Flagler County School District reimbursements.

ITEM 7H – APPROVAL OF AN UNANTICIPATED REVENUE RESOLUTION (URR) FOR TIPS GRANT FOR PURCHASE OF SEVEN (7) BINDER LIFT 2.0 DEVICES.

The following request was approved as part of the Consent Agenda:

Flagler County Board of County Commissioners
Consent: BOCC Departments / Agenda Item 7.h.

Meeting Date:	August 17, 2026
Department Contact:	Michael Tucker, Fire Rescue Chief, Charlie Picano, Human Resources Director
Subject:	**Approval of an Unanticipated Revenue Resolution (URR) for TIPS Grant for Purchase of Seven (7) Binder Lift 2.0 Devices.** Request the Board approve the URR and authorize the acceptance of funds from the PGIT Preferred TIPS Matching Grant Program.

Overview/Summary:
Flagler County's insurance carrier -- Preferred Governmental Insurance Trust (PGIT) -- offers a matching grant to its eligible public entity members under the Preferred TIPS (Matching Training Incentive Program) Insurance Matching Grant Program that provides financial assistance to help members procure safety related equipment, supplies, and training designed to enhance operational safety and reduce risk exposures. Under this program, members may receive up to $5,000 in reimbursement within a single policy year for eligible purchases totaling up to $10,000.
Reimbursement will be used to offset budgeted medical supply expenditures, specifically the purchase of seven (7) Binder Lift 2.0 devices. These devices were scheduled to be purchased in the normal course of business. A Binder Lift is a patient handling device designed to safely assist in lifting and moving individuals who are unable to stand or ambulate on their own. This reduces strain on the patient, prevents awkward lifting motions, and significantly decreases the risk of first responder injuries. Binder Lifts also improve patient comfort and stability during movement and enhance overall safety during medical calls.

In order to properly account for and utilize the revenue in accordance with county financial procedures, an Unanticipated Revenue Resolution (URR) is required to increase the FY 2026 budget by the amount received.

Strategic Plan:
Focus Area: Public Health and Safety
Goal 3 – Improve Public Safety Response and Service Delivery Capabilities.
Objective PHS 3.4: Ensure adequate training, available resources, and current technology to effectively respond to, mitigate, and recover from any local, state, or national event.

Funding Information:
Funds totaling $5,000 will be appropriated with approval of the Unanticipated Revenue Resolution.

Recommendations:

Request the Board approve the URR and authorize the acceptance of funds from the PGIT Preferred TIPS Matching Grant Program.

ITEM 7I – APPROVAL OF AN INCREASE IN THE TEN-8 COOPERATIVE PURCHASE AGREEMENT 22-730K TO PURCHASE FIRE SUPPRESSION EQUIPMENT IN THE AMOUNT OF $965,786.19 AND APPROVAL OF BUDGET TRANSFERS FROM CLOSED LANDFILL FUNDS.

The following request was approved as part of the Consent Agenda:

Flagler County Board of County Commissioners
Consent: BOCC Departments / Agenda Item 7.i.

Meeting Date:	August 17, 2026
Department Contact:	Michael Tucker, Fire Rescue Chief, Jessica Martin, Procurement Coordinator
Subject:	**Approval of an Increase in the Ten-8 Cooperative Purchase Agreement 22-730K to Purchase Fire Suppression Equipment in the Amount of $965,786.19 and Approval of Budget Transfers from Closed Landfill Funds.** Request the Board approve an increase in Cooperative Purchase Agreement 22-730K by $965.486.19 for Self-Contained Breathing Apparatus (SCBA) purchase and approve the budget transfers from reserves in the closed landfill funds.

Overview/Summary:
Self Contained Breathing Apparatus (SCBA) units are critical life safety equipment for firefighters, providing respiratory protection in immediately dangerous to life or health (IDLH) environments. To ensure the highest level of safety and reliability, Flagler County Fire Rescue (FCFR) follows nationally recognized standards established by the National Fire Protection Association (NFPA), specifically *NFPA 1970: Standard on Protective Ensembles for Structural and Proximity Firefighting, Work Apparel, Open-Circuit Self-Contained Breathing Apparatus (SCBA) for Emergency Services, and Personal Alert Safety Systems (PASS)*, and *NFPA 1850: Standard on Selection, Care, and Maintenance of Protective Ensembles for Structural and Proximity Firefighting and Open-Circuit Self-Contained Breathing Apparatus (SCBA).*

NFPA 1850 (2026 edition) the newest, most up-to-date standard governing SCBA selection, care, and maintenance recommends that fire departments develop a comprehensive replacement schedule and identifies ten (10) years as the industry-accepted service life for SCBA components, including the harness, regulator, electronics, and facepieces. NFPA 1850 through its 2026 edition is itself a recent consolidation, merging the former NFPA 1851 (protective ensembles) and NFPA 1852 (open-circuit SCBA) into a single standard.

After ten (10) years of service, SCBA units often reach the end of their certified life due to several factors:

Advancing safety technology: Each revision of the NFPA 1970 standard, the current governing standard for SCBA design and performance, incorporates improved safety requirements, including enhanced thermal performance, accountability electronics, communications, and failure-resistant materials. NFPA 1970 (2025 edition) is also a recent consolidation, combining the former NFPA 1971, 1981, and 1982 standards. Because both governing standards have been substantially rewritten within the past two years, older SCBAs cannot simply be upgraded to meet these newer safety

(Item 7i – Continued)

benchmarks — the underlying design and performance requirements have changed too fundamentally for retrofits to bring legacy units into compliance.

Component degradation: SCBAs are exposed to extreme heat, chemical contaminants, moisture, and physical stress. Even with proper maintenance, seals, wiring, plastic housings, sensors, and pressure-bearing components degrade over time, increasing the risk of malfunction.

End of manufacturer support: After the 10-year mark, most manufacturers discontinue parts, software support, and service for older models, making safe maintenance impossible.

Operational reliability requirements: Firefighters depend on SCBA units in environments where equipment failure can be fatal. A structured 10-year replacement ensures all personnel are equipped with reliable, certifiable units that meet the latest NFPA performance and safety requirements.

The current inventory of SCBA within FCFR predates these updated standards and is reaching the 10-year service life, making these due for replacement.

Staff are also seeking Board approval to increase the Ten-8 Cooperative Purchase Agreement 22-730K by $965,486.19. The increase in contract spend will allow the department to purchase the necessary SCBA units. Ten-8 is used for multiple Fire Rescue items, which includes uniforms, fire equipment, supplies, and other services.

Strategic Plan:
Focus Area: Public Health & Safety
Goal 3 - Improve Public Safety Response and Service Delivery Capabilities.
Objective PHS 3.3: Protect life, property, and the environment from the effects of fire, medical emergencies, disasters, and hazardous materials accidents to current and expanding service delivery areas.
Objective PHS 3.4: Ensure adequate training, available resources, and current technology to effectively respond to, mitigate, and recover from any local, state, or national event.

Funding Information:
Funding is available utilizing the closed landfill funds that are restricted for future capital outlay and which may be used for purchase of Countywide Fire Suppression Equipment per an interlocal agreement created between Flagler County and several municipal corporations within Flagler County in December 2000 upon the early retirement of bonds related to the landfills.

Funding will be appropriated upon approval of the budget transfers from reserves in the closed landfill funds as follows: $294,816 from Fund 1410 and $670,673 from Fund 1409.

Recommendations:
Request the Board approve an increase in Cooperative Purchase Agreement 22-730K by $965.486.19 for Self-Contained Breathing Apparatus (SCBA) purchase and approve the budget transfers from reserves in the closed landfill funds.

ITEM 7J – APPROVAL OF AN INCREASE IN THE APPROVED BOUND TREE COOPERATIVE PURCHASING AGREEMENT #24-008PB SPENDING LIMIT FROM $250,000.00 TO $300,000.00.

The following request was approved as part of the Consent Agenda:

Flagler County Board of County Commissioners
Consent: BOCC Departments / Agenda Item 7.j.

Meeting Date:	August 17, 2026
Department Contact:	Michael Tucker, Fire Rescue Chief, Jessica Martin, Procurement Coordinator, Kelly Bowman, Procurement Coordinator
Subject:	**Approval of an Increase in the Approved Bound Tree Cooperative Purchasing Agreement #24-008PB Spending Limit from $250,000.00 to $300,000.00.** Request the Board authorize the requested increase to the Bound Tree Cooperative Purchasing Agreement #24-008PB spending limit to $300,000 annually for the life of the contract.

Overview/Summary:
On November 20, 2023, the Flagler County Board of County Commissioners approved the usage of a Cooperative Agreement "piggybacked" from Seminole County Contract Number IFB-604500-23/GCM for the purchase of EMS Medical Supplies and Related Components.

The Board approved the piggyback contract on November 20, 2023 with a blanket "not to exceed" amount of $150,000 and a contract expiration date of April 28, 2026 (with two one year renewals), and subsequently approved an annual spending limit increase on May 20, 2024 not to exceed $250,000 dollars. Staff are requesting an increase of the not to exceed limit from $250,000 to $300,000 dollars annually for the life of the contract. This amendment will allow Fire Rescue to continue to purchase needed medical supplies and equipment. Bound Tree has proven to be responsive, cost effective and they have product availability.

Strategic Plan:
Focus Area: Public Health & Safety
Goal 3 – Improve Public Safety Response and Service Delivery Capabilities.
Objective PHS 3.4: Ensure adequate training, available resources, and current technology to effectively respond to, mitigate, and recover from any local, state, or national event.

Funding Information:
Funding to be utilized for this contract is within the Fire Rescue and EMS operating and capital budgets.

Recommendations:
Request the Board authorize the requested increase to the Bound Tree Cooperative Purchasing Agreement #24-008PB spending limit to $300,000 annually for the life of the contract.

ITEM 7K – APPROVAL OF MCKESSON COOPERATIVE PURCHASE AGREEMENT FOR MEDICAL SUPPLIES FOR THE EMPLOYEE HEALTH CLINIC.

The following request was approved as part of the Consent Agenda:

Flagler County Board of County Commissioners
Consent: BOCC Departments / Agenda Item 7.k.

Meeting Date:	August 17, 2026
Department Contact:	Jessica Martin, Procurement Coordinator, Kelly Bowman, Procurement Coordinator, Brian Eichinger, OMB Manager
Subject:	**Approval of McKesson Cooperative Purchase Agreement for Medical Supplies for the Employee Health Clinic.** Request the Board approve the McKesson Medical Surgical Government Solutions, LLC, contract.

Overview/Summary:
McKesson is a multi-year, piggyback contract used to purchase medical goods and services. The Board originally approved this piggyback contract on April 20, 2026. However, subsequent to that approval, McKesson requested revisions to the contract language to more closely align with the Sourcewell piggyback contract. Changes include revising the start date, adding a thirty-day cure period prior to invoking termination, and specifying that the vendor will not indemnify the county for the county's own negligence.

Attached for the Board's consideration is the updated contract. All changes were reviewed and accepted by the County Attorney's Office.

Strategic Plan:
Focus Area: Effective Government
Goal 1 – Maintain Financial Stability

Funding Information:
Funding for this contract is included within the budget utilized by employee health clinic.

Recommendations:
Request the Board approve the McKesson Medical Surgical Government Solutions, LLC, contract.



THIS SPACE INTENTIALLY LEFT BLANK

ITEM 7L – APPROVAL OF RENEWAL TO ISU/BCBS FOR MEDICAL AND PRESCRIPTION STOP LOSS IN THE ESTIMATED AMOUNT OF $1,401,179.52.

The following request was approved as part of the Consent Agenda:

Flagler County Board of County Commissioners
Consent: BOCC Departments / Agenda Item 7.I.

Meeting Date:	August 17, 2026
Department Contact:	Charlie Picano, Human Resources Director
Subject:	**Approval of Renewal to ISU/BCBS for Medical and Prescription Stop Loss in the estimated amount of $1,401,179.52.** Request the Board Approve Renewal for Request for Proposal to ISU/BCBS for Medical and Prescription Stop Loss Insurance in the estimated amount of $1,401,179.52 for FY 2026-27 and authorize the Chair to execute the application as approved by the County Attorney in form and approved by the County Administrator.

Overview/Summary:
A Request for Proposal (RFP) was publicly noticed to all potential Stop Loss providers via the County's Benefits Consultant, The Bailey Group. RFP STOP2026 requested proposals from qualified firms to provide Medical and Prescription Stop Loss Insurance. Each year, the County evaluates stop loss coverage for the employee's health care plan. Stop loss insurance is a policy designed to limit medical and prescription claim coverage (losses) to a specific amount which keeps the County from assuming 100% of the risk associated with its self-funded plan. Instead, the stop loss insurance carrier is liable for losses which exceed a certain dollar amount. Moreover, the coverage protects the County's self-funded health plan by ensuring that catastrophic claims do not impact the financial reserves within the Health Insurance Fund.

On August 5, 2026, the County received one (1) response from our current Stop Loss carrier as outlined in the attached Stop Loss Analysis Report, with ten (10) carriers declining to quote due to being uncompetitive. The Bailey Group, Flagler County's Benefits Consultant, assisted with review of the proposal for conformity to specifications as outlined in the RFP documents.

Below provides a three-year history of premiums paid compared to reimbursements received.

Plan Year Stop Loss Premiums PaidStop Loss Reimbursements ReceivedNet Gain/(Loss)

Plan Year	Stop Loss Premiums Paid	Stop Loss Reimbursements Received	Net Gain/(Loss)
2023-2024	$894,674.04	$966,734.55	$72,060.51
2024-2025	$820,981.00	$2,522,904.00	$72,060.51

(Item 7l – Continued)

2025-2026 (through 6/30/2026)	$750,665.00	$1,214,722.00	$464,057.00

Staff is recommending making no changes to the coverage.

Strategic Plan:
Focus Area: Effective Government
Goal 1 – Maintain Financial Stability

Funding Information:
Funding for the Stop Loss in the amount of $1,401,180 will be included in the Adopted FY 2026-27 within the Health Insurance Fund 1501.

Recommendations:
Request the Board Approve Renewal for Request for Proposal to ISU/BCBS for Medical and Prescription Stop Loss Insurance in the estimated amount of $1,401,179.52 for FY 2026-27 and authorize the Chair to execute the application as approved by the County Attorney in form and approved by the County Administrator.

UNOFFIC

THIS SPACE INTENTIALLY LEFT BLANK

ITEM 7M – APPROVAL OF FEDERAL AVIATION ADMINISTRATION (FAA) GRANT OFFER IN THE AMOUNT OF $591,040 TO ASSIST WITH FUNDING FOR CONSTRUCTION OF TAXILANES REHABILITATION FOR THE FLAGLER EXECUTIVE AIRPORT, AUTHORIZING THE CHAIR TO EXECUTE THE AGREEMENT AS APPROVED TO FORM BY THE COUNTY ATTORNEY, APPROVAL OF AN UNANTICIPATED REVENUE RESOLUTION (URR), AND APPROVAL OF BUDGET TRANSFER.

The following request was approved as part of the Consent Agenda:

Flagler County Board of County Commissioners
Consent: BOCC Departments / Agenda Item 7.m.

Meeting Date:	August 17, 2026
Department Contact:	Roy Sieger, Airport Director
Subject:	**Approval of Federal Aviation Administration (FAA) Grant Offer in the Amount of $591,040 to Assist with Funding for Construction of Taxilanes Rehabilitation for the Flagler Executive Airport, Authorizing the Chair to Execute the Agreement as Approved to Form by the County Attorney, Approval of an Unanticipated Revenue Resolution (URR), and Approval of Budget Transfer.** Request the Board approve the FAA Grant Offer authorizing the Chair to execute the agreement as approved to form by the County Attorney and approve the URR and Budget Transfer.

Overview/Summary:
On August 4, 2025, the BOCC accepted a Federal Aviation Administration (FAA) Grant Offer in the amount of $118,750, which funded 95% of the Design of the Taxilanes to T-Hangars Reconstructon. In addition, on September 15, 2025, the Board accepted a Florida Department of Transportation (FDOT) Public Transportation Grant Agreement (PTGA) in the amount of $4,940, which funded approximately 4% of the project. With this action, staff is bringing forward for consideration an FAA Grant Offer of $591,040 to Construct the Taxilanes to T-Hangars Reconstruction project.

The grant has been received electronically and will require electronic signatures from the Chair of the Flagler County Board of County Commissioners and the County Attorney. The total project cost is $622,148, which will be funded at 95% by the FAA. Below is a table depicting the funding source breakdown for this project.

Project	FAA	FDOT	Airport	Total
Taxilanes Rehabilitation	$591,040	$24,886	$6,222	$622,148

This project includes construction and Construction Engineering and Inspection (CEI) services for the reconstruction of taxilanes serving T-Hangar buildings A, B, and C at Flagler Executive Airport. The project includes paving, grading and drainage for the taxilanes. Also included in the project are pavement markings and stormwater permitting required by St. John's River Water Management District (SJRWMD). The red areas denote the taxilanes that will be reconstructed.

(Item 7m – Continued)



Strategic Plan:

Focus Area: Economic Vitality
Goal 2- Diversify the Tax Base to Improve the Local Economy
Objective EV 2.4: Expand facilities and attract aviation related businesses to the Flagler Executive Airport.

Funding Information:
The FAA Grant Offer is for $591,040, which will fund 95% of the above-mentioned project. The FDOT will fund a total of $24,886 and the Airport Enterprise will fund a total of $6,222 as outlined in the above table. Funding for this agreement in the amount of $591,040 will be appropriated upon approval of the Unanticipated Revenue Resolution. Funding for Local portion will be transferred from Airport Reserves upon approval of the budget transfer.

Recommendations:
Request the Board approve the FAA Grant Offer authorizing the Chair to execute the agreement as approved to form by the County Attorney and approve the URR and Budget Transfer.

ITEM 7N – APPROVAL OF FEDERAL AVIATION ADMINISTRATION (FAA) GRANT OFFER IN THE AMOUNT OF $500,000 FOR AIR TRAFFIC CONTROL TOWER

(ATCT) RENOVATIONS AT THE FLAGLER EXECUTIVE AIRPORT, AUTHORIZING THE CHAIR TO EXECUTE THE AGREEMENT AS APPROVED TO FORM BY THE COUNTY ATTORNEY, APPROVAL OF AN UNANTICIPATED REVENUE RESOLUTION (URR).

Flagler County Board of County Commissioners
Consent: BOCC Departments / Agenda Item 7.n.

Meeting Date:	August 17, 2026
Department Contact:	Roy Sieger, Airport Director
Subject:	**Approval of Federal Aviation Administration (FAA) Grant Offer in the Amount of $500,000 for Air Traffic Control Tower (ATCT) Renovations at the Flagler Executive Airport, Authorizing the Chair to Execute the Agreement as Approved to Form by the County Attorney, Approval of an Unanticipated Revenue Resolution (URR).** Request the Board approve the FAA Grant Offer authorizing the Chair to execute the agreement as approved to form by the County Attorney and approve the URR.

Overview/Summary:
In February of 2026, the Airport Director submitted an Infrastructure Investment and Jobs Act (IIJA) Competitive Grant Project for the Air Traffic Control Tower (ATCT) to the Federal Aviation Administration (FAA) to assist in its renovations. The ATCT was constructed in 2009 and has begun to show noticeable signs of aging. The airport has consistently invested in maintenance projects throughout the years to keep the facility operational and safe; however, there are now significant needs that require more comprehensive support.

The Airport Director has been notified by the FAA that Flagler County will be receiving a grant in the amount of $500,000 to assist with funding the renovations to the Air Traffic Control Tower. The grant will be received electronically and will require electronic signatures from the Chair of the Flagler County Board of County Commissioners and the County Attorney's Office.

The scope of this project includes design services, construction administration and comprehensive renovations to the Air Traffic Control Tower. Planned improvements encompass building envelope repairs, roofing, recaulking of windows, painting, carpeting, new AC systems, and installation of an upgraded security entrance system. These updates are essential to maintaining the safety, functionality, and integrity of our facility. The total project cost is $500,000, which will be funded at 100% by the FAA.

Strategic Plan:
Focus Area: Economic Vitality
Goal 2 - Diversify the Tax Base to Improve the Local Economy
Objective EV 2.4: Expand facilities and attract aviation-related businesses to the Flagler Executive Airport.

Funding Information:

The following request was approved as part of the Consent Agenda:

The FAA Grant Offer is for $500,000, which will fund 100% of the above mentioned project. Funding for this agreement in the amount of $500,000, will be appropriated upon approval of the Unanticipated Revenue Resolution.

Recommendations:
Request the Board approve the FAA Grant Offer authorizing the Chair to execute the agreement as approved to form by the County Attorney and approve the URR.

ITEM 7O – APPROVAL OF COMMITTEE RE-APPOINTMENT OF SHARON B. ATACK TO THE LIBRARY BOARD OF TRUSTEES (LBOT).

The following request was approved as part of the Consent Agenda:

Flagler County Board of County Commissioners
Consent: BOCC Departments / Agenda Item 7.o.

Meeting Date: August 17, 2026
Department Contact: Holly Albanese, Library Director
Subject: **Approval of Committee Re-Appointment of Sharon B. Atack to the Library Board of Trustees (LBOT).** Request the Board approve the re-appointment of Sharon B. Atack to the LBOT.

Overview/Summary:
Established in accordance with Flagler County Code Section 25, the Library Board of Trustees' function is to establish policies regarding the delivery of public library services and to report to the Board and citizens of the County at least once a year regarding the status, progress, and needs of the library in regard to the provision of these services.

Membership: Consists of seven (7) members appointed by the Board, each appointed to a three (3) year term:

Term	Member Name	Initial Appointment Date
03/20/2026 – 03/20/2029	Ms. Nancy Bettencourt	03/20/2023
07/10/2023 – 07/10/2026	Ms. Sharon B. Atack	06/07/1993
09/06/2023 – 09/06/2026	Ms. Jeanne Nix	09/06/2020
03/03/2025 – 03/03/2028	Mr. Donald O'Brien Jr	Initial Term
08/04/2025 – 08/04/2028	Ms. Rebecca Long	Initial Term
09/03/2025 – 09/03/2028	Ms. Safiya Soares	Initial Term
12/01/2025 – 12/01/2028	Ms. Helen VanDerhyden	Initial Term

Vacancies are advertised on the County's website www.FlaglerCounty.gov. Judge Atack was initially appointed to the Board of Trustees on June 7, 1993, and she has been subsequently reappointed, with her most recent term expiring on July 10, 2026. She is a Flagler County resident and a registered voter, and she has applied for reappointment.

Strategic Plan:
Focus Area: Effective Government
Goal 2 – Build and Maintain Relationships to Support Effective and Efficient Government.

Funding Information:
N/A

Recommendations:
Request the Board approve the reappointment of Sharon B. Atack to the LBOT.

GENERAL BUSINESS

ITEM 8A – CONSIDERATION OF A RELEASE OF THE CONSERVATION EASEMENT FOR LOT 70 IN ARMAND BEACH EAST SUBDIVISION.

Flagler County Board of County Commissioners
General Business / Agenda Item 8.a.

Meeting Date:	August 17, 2026
Department Contact:	Adam Mengel, Acting County Administrator
Subject:	**Consideration of a Release of the Conservation Easement for Lot 70 in Armand Beach East Subdivision.** The Board of County Commissioners may: - Approve the Release of Easement releasing the Conservation Easement for Lot 70, Armand Beach East Subdivision (only Lot 70); - Approve the Release of Easement releasing the Conservation Easement within the Armand Beach East Subdivision (entire easement); - Not Approve either Release of Easement, leaving the Conservation Easement in place; or - Continue consideration of the Request to Release the Easement for Lot 70 to a time and date certain on the basis that additional information is necessary for the Board to be able to make a decision on this request.

Overview/Summary:
On June 18, 2026, Mr. John K. Henley submitted a letter requesting that the Board release the Conservation Easement on Lot 70 in Armand Beach East Subdivision, as recorded in Map Book 8, Pages 21 and 22, Public Records of Flagler County, Florida. Mr. Henley and others have approached the Board over the last twenty years attempting to release the Conservation Easement. This easement is particularly onerous for Lots 70 and 71 due to the easement extending over the entirety of both lots, leaving no lot area outside of the easement.

As best can be determined (although the cause and effect are somewhat in dispute), the Conservation Easement was imposed on Stan Rosenbaum as the successor to the original developer of the Armand Beach East subdivision, Armand Fischetti. Contractors working on behalf of Mr. Rosenbaum had initiated site work without proper permitting or authorization from the U.S. Army Corps of Engineers, prompting the imposition of the Conservation Easement over portions of the subdivision. This easement was dated February 27, 1992 and was recorded on March 3, 1992 at Official Records Book 462, Page 1370, Public Records of Flagler County, Florida.

The Conservation Easement was accompanied by a list of Restrictions and Covenants to be enforced by the County pursuant to Sec. 704.06, *Fla. Stat.* Among these restrictions was a prohibition on construction within the easement except on pilings, a prohibition on the placement of soil (except as authorized by USACOE Permit Number 89-IPW-90020), and a prohibition on the removal or destruction of trees or shrubs. Over the years, landowners have developed consistent with the easement's restrictions, constructing on pilings as needed. Others have cleared into the easement areas

(Item 8a – Continued)

prompting Code Enforcement action to restore these areas. Specific to Lots 70 and 71, the Restrictions and Covenants have rendered these lots unbuildable, and for other lots made development complicated.

The Conservation Easement was divided into two parts: part identified as recreated wetlands, within which Mr. Rosenbaum was required to plant Spartina (depicted as a shaded area on the easement's sketch); and part identified as existing/remaining wetlands (depicted as lined areas on the easement's sketch). The total area of recreated wetlands was 3.9671 acres, and the area of existing wetlands was 1.9863 acres: total of both areas within the Conservation Easement was 5.9534 acres. The saltwater overwash from Hurricane Matthew ended up filling most of the Spartina that had remained from the Corps' required planting within the recreated wetland areas. Brazilian Pepper has also encroached into many of these areas.

The sketch was accompanied by a legal description of the Conservation Easement, which described both the recreated and remaining wetlands within six separate areas depicted and described as Parcels A through F:

Parcel	Lot Numbers	Wetland Type
A	Pt of 93, Pt of 94	existing/remaining
B	Pt of 69	recreated & existing/remaining
B	All of 70, All of 71	existing/remaining
B	Pt of 85, Pt of 86	existing/remaining
B	Pt of 87	recreated & existing/remaining
B	Pt of 88	recreated
B	Pt of 89	recreated
C	Pt of 110-144, Pt of 231	recreated
D	Pt of 116-148	recreated
D	Pt of 194-200	recreated
D	Pt of 203, Pt of 204	recreated
E	Pt of 205-214	recreated
E	Pt of 215, Pt of 223	recreated & existing/remaining
E	Pt of 216, Pt of 222	existing/remaining
E	Pt of 224-230	recreated
F	Pt of 163, Pt of 164	recreated
F	Pt of 170-179	recreated
F	Pt of 181-186	recreated

Of note is the presence of platted 7.5 foot wide drainage and utility easements along all rear and side lot lines, with these easements coinciding with the conservation easements in most of the locations where the conservation easement was imposed. This created a conflict over the years where a drainage easement was located within a conservation easement where a lot owner would be subject to the prohibitive Restrictions and Covenants. As recent as 2024, the County inquired with the HOA about their stance on clearing within the easement, especially where the conservation

(Item 8a – Continued)

easement and the platted drainage easement coincided: the HOA replied that they had not and would not override the County to require drainage easement maintenance within a conservation easement where maintenance was otherwise prohibited.

There had been attempts to release the easement in the past, but the Board opted to keep the Conservation Easement in place. The Conservation Easement was intended to be a perpetual easement with no expiration, but there were provisions for transfer and for termination, with termination reverting the use of the land to each respective lot owner:

> "In the event Grantee or its successor assigns, abandons, terminates or surrenders the Conservation Easement, the conservation property will revert to the holder of the fee of the conservation property."

Correspondence to Ms. Wilks and Mr. Henley in 2022 (attached) indicated that, from the County's standpoint, not much had changed over the years. The physical conditions that required imposition of the Conservation Easement originally remain in place. Other lot owners subject to the easement had sought Jurisdictional Determinations from the Corps, and for the most part the Corps determined that there was no longer a national interest in the continuation of the easement, although wetlands were still determined to be present. Similarly, the St. Johns River Water Management District, while not a specific party to the easement, had determined that continuation of the easement was not within the regulatory authority of the District. The release of the easement is left solely to the discretion of the Board of County Commissioners, the same as it has always been.

Strategic Plan:
Focus Area: Effective Government
Goal 2 – Build and Maintain Relationships to Support Effective and Efficient Government.

Funding Information:
N/A

Recommendations:
The Board of County Commissioners may:
- Approve the Release of Easement releasing the Conservation Easement for Lot 70, Armand Beach East Subdivision (only Lot 70);
- Approve the Release of Easement releasing the Conservation Easement within the Armand Beach East Subdivision (entire easement);
- Not Approve either Release of Easement, leaving the Conservation Easement in place; or
- Continue consideration of the Request to Release the Easement for Lot 70 to a time and date certain on the basis that additional information is necessary for the Board to be able to make a decision on this request.

Interim County Administrator Adam Mengel presented the request from property owner John Henley to release a county-enforced conservation easement on Lot 70. Noted that the Army Corps of Engineers and St. Johns River Water Management District indicated no regulatory objection to releasing the easement, leaving the policy decision to the BOCC. Reviewed history of the subdivision easement and noted the easement overlaps a drainage easement, hindering canal maintenance. Stated the available 4 options the BOCC has regarding the easements on Lot 70.

(Item 8a – Continued)

Commissioner Hansen noted violations of the current easement. Spoke in support of releasing the easement entirely.

Commissioner Carney asked if any provisions would remain.

Mr. Mengel confirmed that if the easement is released, all related provisions would also be released.

Commissioner Carney inquired about the rationale for releasing Lot 70 while withholding Lot 71.

There was extensive BOCC discussion on the wetland status of the area.

Commissioner Dance voiced opposition to circumventing the established jurisdictional process.

Mr. Mengel noted that the BOCC could make a condition that the easement be released and the properties formerly included within the conservation easement would request a jurisdictional determination from the court.

Chair Pennington called for public comment.

Michelle Clark, HBE HOA President, requested clear guidance from the County regarding allowable canal maintenance, noting overgrown brush blocks drainage. Stated she has no objection to the property owner developing on the parcel.

Rob Derowski, Hammock resident, expressed concern regarding potential flooding if additional lots are developed without resolving overall canal drainage. Requested clarity on the impacts that will come from allowing residential construction on the property.

John Henley, the applicant/ owner of Lot 70, reviewed environmental study findings confirming Lot 70 contains no wetlands and shared historical easement details that included the original builder,

Raymond Royer, Flagler Beach resident, expressed support with Mr. Henley and acknowledged lot owner concerns and urged county resolution of longstanding easement ambiguities.

Chair Pennington closed public comment. Asked Mr. Mengel who in the County is responsible for overseeing the canals.

UNOFFICIAL

(Item 8a – Continued)

Mr. Mengel provided background on a previous one-time mercy cleaning performed by the County. Explained that the permit for Hammock Beach Estates is under the jurisdiction of the Water Management District, which serves as the designated maintenance authority. Further noted that discussions have taken place regarding the County potentially assuming that responsibility.

Commissioner Hansen expressed support releasing the easement over the whole area. Noted the condition of the canals in the area and noted that if the County assumes that responsibility it will be costly.

Commissioner Carney questioned if a meeting with the HOA could occur in order to find a resolution for the canals.

Commissioner Dance noted that an engineering study of the canals needs to be performed prior to releasing the easement.

There was extensive BOCC discussion regarding the drainage issue and deciding on the proposed release of the associated easement.

Mr. Mengel spoke on the ditch flow running from north to south and noted the County has been working on the matter over the last 6 years. Noted the subdivision does not meet the current requirements for Water Management District. Specified different Water Management District permits obtained by the relative subdivisions.

Chair Pennington expressed opposition to reviewing the easement in its entirety at this time, noting that an exception could potentially be considered for Lot 7 upon receipt of a Jurisdictional Determination Letter.

Mr. Henley stated that County staff previously advised him that if his lot were released from the permit, the County would release it from the conservation easement. Noted that he hired a professional to conduct a wetland assessment on his property and shared the Army Corps of Engineers' intent regarding the easement. Additionally provided a timeline of events since purchasing the parcel and expressed frustration with the County's requests.

Chair Pennington inquired if the County has received a copy of the Army Corps letter.

Mr. Henley confirmed he can provide the County copies of all documentation.

Mr. Mengel noted he has a large amount of information on the matter including previous staff reports and clarified the assessed value of Mr. Henleys parcel.

(Item 8a – Continued)

Commissioner Dance stated that his primary reasons for tabling the item were to obtain further information regarding a jurisdictional determination and a preliminary drainage engineering analysis.

A motion was made by Commissioner Dance to table Item 8a to October 19, 2026, at 5:00 p.m., and direct staff to provide an overview of overall area drainage patterns, and jurisdictional determination documentation. Seconded by Commissioner Richardson.

Chair Pennington called for a roll call vote.

Deputy Clerk Tiffani Smith captured the following votes:

- **Commissioner Carney "Yes"**
- **Chair Pennington "Yes"**
- **Commissioner Dance "Yes"**
- **Commissioner Hansen "Yes"**
- **Commissioner Richardson "Yes"**

Motion carried unanimously.

UNOFFICIAL

THIS SPACE INTENTIALLY LEFT BLANK

PUBLIC HEARINGS

ITEM 9A – QUASI-JUDICIAL – PROJECT 2026030052 – REQUEST FOR A SPECIAL USE IN THE PUD (PLANNED UNIT DEVELOPMENT) DISTRICT - REQUEST FOR A SPECIAL USE FOR A TELECOMMUNICATIONS TOWER IN THE PUD (PLANNED UNIT DEVELOPMENT) DISTRICT AT 2730 AIRPORT ROAD. PARCEL NUMBER: 22-14-31-3080-00000-00A0. PARCEL SIZE: 10.44+/- ACRES. OWNER/APPLICANT: HUNTERS RIDGE AIRPORT ROAD LLC/HAROLD TIMMONS. (AR 6415).

Flagler County Board of County Commissioners
Public Hearings / Agenda Item 9.a.

Meeting Date:	August 17, 2026
Department Contact:	Simone Kenny, Senior Planner
Subject:	**QUASI-JUDICIAL – Project 2026030052 – REQUEST FOR A SPECIAL USE IN THE PUD (PLANNED UNIT DEVELOPMENT) DISTRICT - Request for a Special Use for a Telecommunications Tower in the PUD (Planned Unit Development) District at 2730 Airport Road. Parcel Number: 22-14-31-3080-00000-00A0. Parcel Size: 10.44+/- Acres. Owner/Applicant: Hunters Ridge Airport Road LLC/Harold Timmons. (AR 6415).** The Board of County Commissioners may: APPROVE Project No. 2026030052, finding that the special siting criteria as listed at Land Development Code Section 3.06.05.F. have been met and therefore approve the Special Use for a Telecommunication Tower at 2730 Airport Road (Parcel No. 22-14-31-3080-00000-00A0). DENY Project No. 2026030052, finding that the special siting criteria as listed at Land Development Code Section 3.06.05.F. have not been met and therefore deny the Special Use for a Telecommunication Tower at 2730 Airport Road (Parcel No. 22-14-31-3080-00000-00A0). CONTINUE Project No. 2026030052, on the basis that additional information is needed from staff or the applicant. Based on the presentation and the public hearing, the Board does not have sufficient information to be able to render a decision on the special use request. Continuing the special use request to a time and date certain will provide an opportunity for staff or the applicant to provide additional information. Should the Board of County Commissioners opt to approve the Special Use request, additional conditions and safeguards may be added as part of the motion for approval of the request.

Overview/Summary:
This request is for approval of a Special Use for a Telecommunications Tower in the PUD (Planned Unit Development) zoning district:

(Item 9a – Continued)

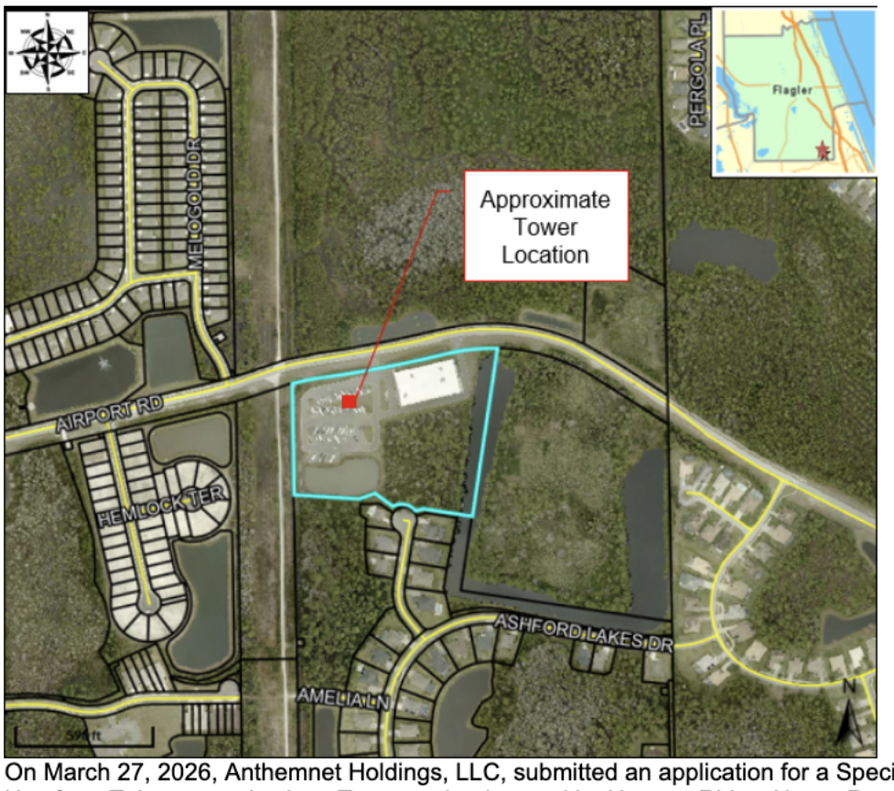

On March 27, 2026, Anthemnet Holdings, LLC, submitted an application for a Special Use for a Telecommunications Tower on land owned by Hunters Ridge Airport Road LLC. The proposed tower is a 190' tall monopole located within a 2,773+/- square foot lease area on property currently zoned as the Hunters Ridge Storage PUD and enclosed with an 8' tall chain link fence as required.

Although the current proposed tenant is Verizon, the proposed tower is designed to allow for a total of four 4) communication providers, allowing a maximum height of 300 feet provided by LDC Sec. 3.06.05.F.8.(g)2.c. The applicant has provided the proposed lease areas on the site plan along with the signed letter attesting that it will allow other carriers to co-locate on the subject tower.

As provided by the applicant, there are currently three other towers located within two-miles of the proposed location, located to the south, east, and southeast approximately 1.5, 1.9, and 1.8 miles, respectively. The applicant has stated in their application that these locations are outside of the 0.25 mile search area designated as by the proposed tenant, Verizon, as geographically feasible.

An Airspace Analysis was completed under all obstacle evaluation rules specified in

(Item 9a – Continued)

Federal Aviation Regulations (FAR) Part 77 sub-part C and determined that notice to the FAA will be required.

Per LDC Section 3.06.05.A, Special Uses may be allowed in any zoning district. The specific uses and dimensional requirements for the subject parcel were approved through the adoption of the Hunter's Ridge Storage at Hunter's Ridge (PUD) development agreement at the May 16, 2022 Board of County Commissioners regular meeting and recorded in Official Records Book 2700, Page 470, Public Records of Flagler County, Florida.

The application is succeeded by a companion application to amend the PUD Site Development Plan for the Hunters Ridge Storage PUD (Project No. 2026040057).

The Technical Review Committee reviewed this request as part of its April 15, 2026 meeting. All comments have been satisfactorily addressed by the applicant.

This application was heard at the Planning and Development Board's June 9, 2026 regular meeting. Numerous Public Comments expressed objections to the proposed location's proximity to existing residential homes, particularly in the Ashford Lakes Estates subdivision to the south.

The Planning and Development Board unanimously recommended denial based on LDC Sec. 3.06.05.F.9.(a)8. which discusses the availability of suitable existing towers and other structures. The applicant reaffirmed that the three towers located within the 2-mile search radius are outside the 0.25 mile search area designated by the proposed tenant, Verizon, as geographically feasible and that the intention of the proposed tenant is to strengthen the existing network rather than expand it.

This agenda item is:
__X__ quasi-judicial, requiring disclosure of ex-parte communication; or
_____ legislative, not requiring formal disclosure of ex-parte communication.

Public Notice: Public notice has been provided in accordance with Section 2.07.00 of the LDC. This item was originally noticed for the July 13, 2026 Board of County Commissioners regular meeting and was continued at the request of the applicant.

Strategic Plan:
Focus Area: Effective Government
Goal 2 – Build and Maintain Relationships to Support Effective and Efficient Government.
Objective EG 2.4: Establish joint strategies to identify and address needs through leveraging of local resources, such as: City Managers; Park Master Plan; Annual Shore Capital Improvement projects; and the National Community Survey.
Measure EG 2.4.2: Implement procedural and regulatory measures to protect public health, safety, and welfare

THIS SPACE INTENTIALLY LEFT BLANK

(Item 9a – Continued)

Funding Information:
N/A

Recommendations:
OPTIONS FOR THE BOARD: The Board of County Commissioners may:
APPROVE Project No. 2026030052, finding that the special siting criteria as listed at Land Development Code Section 3.06.05.F. have been met and therefore approve the Special Use for a Telecommunication Tower at 2730 Airport Road (Parcel No. 22-14-31-3080-00000-00A0).
DENY Project No. 2026030052, finding that the special siting criteria as listed at Land Development Code Section 3.06.05.F. have not been met and therefore deny the Special Use for a Telecommunication Tower at 2730 Airport Road (Parcel No. 22-14-31-3080-00000-00A0).
CONTINUE Project No. 2026030052, on the basis that additional information is needed from staff or the applicant. Based on the presentation and the public hearing, the Board does not have sufficient information to be able to render a decision on the special use request. Continuing the special use request to a time and date certain will provide an opportunity for staff or the applicant to provide additional information.
Should the Board of County Commissioners opt to approve the Special Use request, additional conditions and safeguards may be added as part of the motion for approval of the request.

Chair Pennington asked for ex-parte disclosure

Commissioner Carney noted a brief discussion with the applicant's counsel Michael Chiumento which would not affect her vote.

Commissioner Richardson noted brief contact with a resident at a community meeting.

Chair Pennington, Commissioner Dance, and Commissioner Hansen reported no ex-parte communications.

Simone Kenny, Planner, presented the special use request for a 190-foot self-supporting monopole telecommunications tower on a light industrial parcel within the Hunter Ridge Storage PUD. Shared dynamics of the building and available parking on the property. *(presentation on file at the clerk's office)*

Commissioner Carney questioned if a section of the property located on the east side was residential.

Ms. Kenny confirmed the east portion of the property Commissioner Carney was referring to was conservation. Shared information on the requested tower, confirming an 8ft fence would be surrounding the tower as required by code. Noted 3 other towers located within a 2-mile radius. Reviewed the Special Use Guidelines from the LDC with the BOCC in relation to the tower. Reported that the Planning and Development Board recommended denial at its June 9, 2026, meeting based on Criterion 8 (availability of suitable existing towers or structures). Noted additional materials provided by the applicant since the PDB meeting.

UNOFFICIAL

(Item 9a – Continued)

Commissioner Carney inquired how Verizon determined proposed tower locations and whether 5G coverage would eventually necessitate a tower every two miles.

Michael Chiumento, Attorney for the applicant, gave a presentation. Cited statutory provisions that preempt local governments from considering health concerns or evaluating service "need" regarding the proposed Verizon telecommunications tower. Reported that Emergency Services requested reserved space on the tower and confirmed the applicant agreed to accommodate the request, offering a 10-foot vertical envelope reserved for Flagler County Emergency Services communications equipment as a condition of approval. Further explained that Verizon Wireless requires heightened network capacity and data density to serve existing demand and planned growth of over 1,600 upcoming residential units in the area. Referenced the tower's distance from local residences, shared imagery of the Florida Power & Light (FPL) easement and transmission lines bisecting the development. *(presentation on file at the clerk's office)*

Commissioner Dance inquired if any of the 3 other towers located within the 2 mile have Verizon.

Mr. Chiumento confirmed that one of the towers in the 2-mile radius has Verizon.

Chair Pennington referenced the FCC coverage map, noting that Verizon currently only provides up to 4G service in that area and lacks in-vehicle mobile coverage.

Commissioner Dance inquired of County Attorney Michael Rodriguez whether the County is legally bound to accept Verizon's proposed 0.25-mile search ring, or if the County could evaluate the broader two-mile radius.

Mr. Rodriguez advised the BOCC that local government cannot initiate questions relating to the business decisions of the service provider, the customer demand for its service from a particular area, however, if the applicant voluntarily provides relative information, the BOCC can discuss the matter.

Commissioner Dance further spoke on the previous ruling regarding the 3 additional towers within the 2-mile radius.

Mr. Chiumento stated that there is no evidence demonstrating sufficient space or capacity on the surrounding existing towers. Further spoke on tower location.

UNOFFICIAL

(Item 9a – Continued)

Chair Pennington called for public comment.

The following residents spoke in support of the Planning Boards Decision:

- Perry Correll, Hunter Ridge resident
- James Gelotti, Hunter Ridge resident
- Marity Gelotti, Hunter Ridge resident
- Bobby Caliendo, Hunter Ridge resident

Reggie Carrell, Hunter Ridge resident, expressed frustration regarding prior tree removal during the storage facility construction and direct line-of-sight exposure to the proposed tower location.

Chair Pennington closed public comment. Inquired if the Planning Board used any of the coverage maps provided by Mr. Correll in their decision.

Ms. Kenny noted that although she does not specifically remember that material being used, all written public comment is forwarded to the Planning Board.

Chair Pennington highlighted the multifaceted nature of the coverage area online view and questioned whether the Planning Board reached its decision based on a single perspective of the tower's coverage model. Added that the airport road property address was not shown.

Commissioner Dance stated that to his understanding, the Planning Board did not reject the request because of coverage, but rather because of the additional towers in the 2-mile radius.

Chair Pennington inquired what documentation had been presented to the Planning Board demonstrating that existing towers lacked sufficient coverage.

Harold Timmons, Applicant Representative, and member of Tower Engineering Professionals, explained that he provided maps to the Planning Board that Verizon Wireless Internal RF Engineering Division provided to him.

Chuck Miranda, Interim Growth Management Director, stated his understanding that the Planning Board’s recommendation was primarily based on their belief that a more suitable alternative location existed for the tower based on the Special Use Guidelines criteria in the LDC.

UNOFFICIAL

(Item 9a – Continued)

Ms. Kenny stated that the Planning Board found an alternative location would be preferable, citing Special Use Guideline 8 as the key basis for their decision.

Commissioner Carney inquired when the LDC ordinance was written.

Ms. Kenny stated 2004.

Commissioner Carney questioned whether the County ordinance needs to be updated to reflect recent technological advancements.

Mr. Miranda confirmed the LDC will be rewritten and modernized based on statute and federal regulations.

Mr. Chiumento further spoke on lack of evidence to support the Planning Boards decision that there was availability of suitable existing towers.

Commissioner Dance asked if there was documentation to support that Verizon is only on one of the existing 3 towers in the 2-mile radius.

Mr. Timmons presented coverage data for the three existing towers and identified the structure Verizon currently occupies. Utilizing the geographic map, he highlighted the specific target areas Verizon is seeking to serve.

Commissioner Carney spoke on tower locations relative to community growth and visual impact concerns.

Commissioner Richardson noted her personal relation to telecommunication towers and stated she does not see viability for any more towers.

Commissioner Dance inquired if the required FAA notice had been received.

Staff confirmed the FAA notice was in the packet.

UNOFFICIAL

(Item 9a – Continued)

There was continued BOCC discussion regarding resident homes proximity to the tower and contradiction in Verizon coverage maps provided by the applicant and residents.

Mr. Rodriguez provided a comparative analysis between the Planning Board's decision and the Land Development Code (LDC) Section 8 criteria. Emphasized the distinction between erecting a new structure versus adding coverage through co-location on an existing tower or structure, adding that state statutes authorize local governments to collaborate with an applicant to identify alternative locations.

There was continued BOCC discussion regarding the potential approval or denial of Item 9a, focusing on the presence or lack of record evidence demonstrating whether an alternative tower exists that is capable of providing equivalent coverage and visual obtrusiveness of the tower.

Mr. Rodriguez noted that any denial from the BOCC on item 9a will require written reason for denial in order to be consistent with the Federal Telecommunications Act.

A motion was made by Commissioner Hansen to approve item 9a Telecommunications tower in the PUD district 2730 Airport Rd. Motion died due to lack of second.

Commissioner Dance voiced his concern with approving the applicants requested site based off convenience. Noting lack of due diligence of other potential sites.

Mr. Rodriguez advised the BOCC that if they are to deny the request for item 9a because they believe the site does not meet the 8th LDC criteria, they must have competent substantial evidence that supports the site does not reach that eight criteria.

A motion was made by Commissioner Carney to deny Item 9a based on Special Use Criterion 8 (LDC Section 3.06.05.F.8), finding that the applicant provided insufficient evidence to demonstrate that no existing suitable tower or structure can accommodate the proposed antenna. Seconded by Commissioner Dance.

Chair Pennington called for a roll call vote.

UNOFFICIAL

(Item 9a – Continued)

Deputy Clerk Tiffani Smith captured the following votes:

- **Chair Pennington "No"**
- **Commissioner Carney "Yes"**
- **Commissioner Dance "Yes"**
- **Commissioner Hansen "No"**
- **Commissioner Richardson "No"**

Motion failed 2 to 3.

A motion was made by Commissioner Hansen to approve Item 9a as presented. Seconded by Commissioner Richardson.

Chair Pennington called for a roll call vote.

Deputy Clerk Tiffani Smith captured the following votes:

- **Commissioner Dance "Nay"**
- **Commissioner Carney "Nay"**
- **Commissioner Hansen "Yes"**
- **Commissioner Richardson "Yes"**
- **Chair Pennington "Yes"**

Motion carried 3 to 2 with Commissioners Dance and Carney dissenting.

UNOFFICIAL

ITEM 9B – QUASI-JUDICIAL – PROJECT 2026040057 – REQUEST TO AMEND THE PUD SITE DEVELOPMENT PLAN – REQUEST TO AMEND THE PUD SITE DEVELOPMENT PLAN FOR HUNTER'S RIDGE STORAGE IN THE PUD (PLANNED UNIT DEVELOPMENT DISTRICT) PARCEL NUMBER: 22-14-31-3080-00000-00A0; PARCEL SIZE: 454,863+/- SQUARE FEET (10.44+/- ACRES). OWNER/APPLICANT: HUNTERS RIDGE AIRPORT ROAD LLC/HAROLD TIMMONS. (AR 6481).

Flagler County Board of County Commissioners
Public Hearings / Agenda Item 9.b.

Meeting Date:	August 17, 2026
Department Contact:	Simone Kenny, Senior Planner
Subject:	**QUASI-JUDICIAL – Project 2026040057 – REQUEST TO AMEND THE PUD SITE DEVELOPMENT PLAN – Request to Amend the PUD Site Development Plan for Hunter's Ridge Storage in the PUD (Planned Unit Development District) Parcel Number: 22-14-31-3080-00000-00A0; Parcel Size: 454,863+/- Square Feet (10.44+/- Acres). Owner/Applicant: Hunters Ridge Airport Road LLC/Harold Timmons. (AR 6481).** The Board of County Commissioners may: APPROVE Project No. 2026040057 for a PUD Site Development Plan amendment for Hunter's Ridge Storage at 2730 Airport Road (Parcel No. 22-14-31-3080-00000-00A0). DENY Project No. 2026040057 for a PUD Site Development Plan amendment for Hunter's Ridge Storage at 2730 Airport Road (Parcel No. 22-14-31-3080-00000-00A0). CONTINUE Project No. 2026040057 for a PUD Site Development Plan amendment for Hunter's Ridge Storage at 2730 Airport Road (Parcel No. 22-14-31-3080-00000-00A0) to a time and date certain.

Overview/Summary:
The subject parcel lies South of Airport Road between Hunter's Ridge Boulevard and Briargate Look:



(Item 9b – Continued)

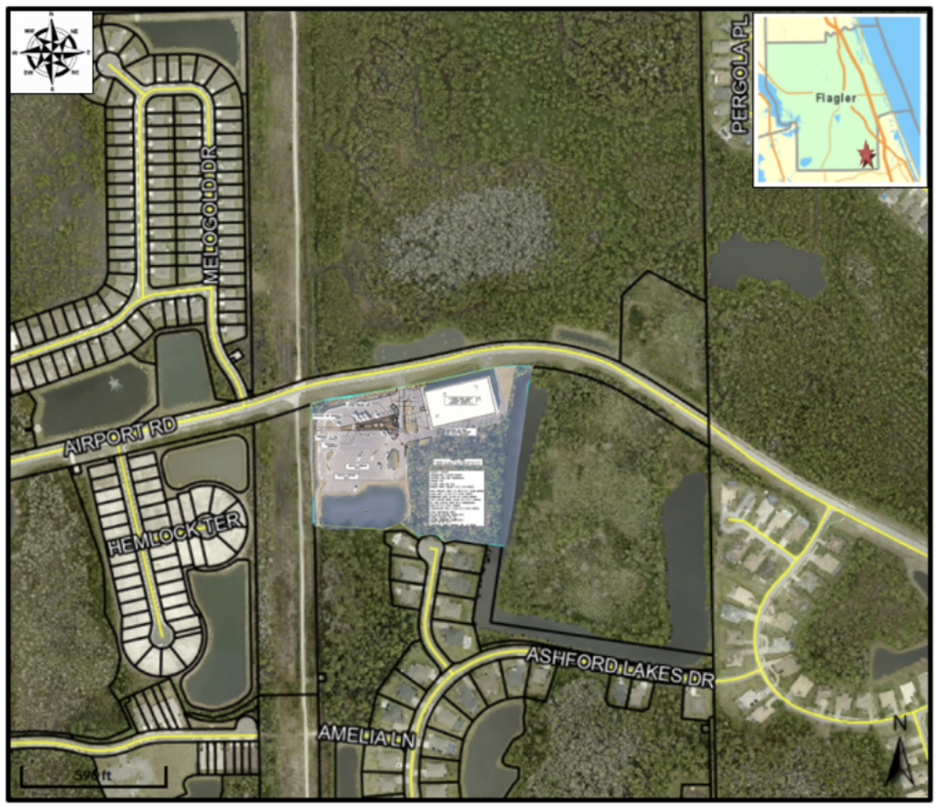

The agent on behalf of the owner filed an application and related documents with the County on April 16, 2026. This request seeks approval of an amendment to a Planned Unit Development (PUD) Site Development Plan (SDP) for Hunter's Ridge Storage.

The site currently consists of 102,000 square feet of conditioned indoor personal storage within a three-story building and 64 elongated asphalt parking spaces for outdoor storage of recreational vehicles and boats. The agent is proposing to add a 190 foot tall monopole communications tower in between the RV parking spaces.

This application is preceded by a companion application to approve the Special Use for a Telecommunication Tower (Project No. 2026030052).

Per LDC Section 3.06.05.A, Special Uses may be allowed in any zoning district. The specific uses and dimensional requirements for the subject parcel were approved through the adoption of the Hunter's Ridge Storage at Hunter's Ridge (PUD) development agreement and Site Development Plan at the May 16, 2022 Board of County Commissioners regular meeting and recorded in Official Records Book 2700,

(Item 9b – Continued)

Page 470, Public Records of Flagler County, Florida.

The application for the amendment of the PUD Site Development Plan was discussed by the Technical Review Committee on May 20, 2026. The applicant has satisfactorily addressed the TRC comments.

This application was heard at the Planning and Development Board's June 9, 2026 regular meeting. Following the Board's recommendation to deny the Special Use for the Telecommunication Tower (Project No. 2026030052), the Board unanimously recommended denial of the amendment of the PUD Site Development Plan.

BCC review authority: Section 3.04.03, LDC, requires that the Board of County Commissioners review and approve, modify or deny PUD Site Development Plans following consideration of the Planning and Development Board's recommendations and the factual data presented during the public hearing in support of the request.

This agenda item is:
__X__ quasi-judicial, requiring disclosure of ex-parte communication; or
_____ legislative, not requiring formal disclosure of ex-parte communication.

Public Notice: Public notice has been provided in accordance with Section 2.07.00 of the LDC. This item was originally noticed for the July 13, 2026 Board of County Comissioners regular meeting and was continued at the request of the applicant.

Strategic Plan:
Focus Area: Effective Government
Goal 2 – Build and Maintain Relationships to Support Effective and Efficient Government.
Objective EG 2.4: Establish joint strategies to identify and address needs through leveraging of local resources, such as: City Managers; Park Master Plan; Annual Shore Capital Improvement projects; and the National Community Survey.
Measure EG 2.4.2: Implement procedural and regulatory measures to protect public health, safety, and welfare

Funding Information:
N/A

Recommendations:
OPTIONS FOR THE BOARD: The Board of County Commissioners may:
APPROVE Project No. 2026040057 for a PUD Site Development Plan amendment for Hunter's Ridge Storage at 2730 Airport Road (Parcel No. 22-14-31-3080-00000-00A0).
DENY Project No. 2026040057 for a PUD Site Development Plan amendment for Hunter's Ridge Storage at 2730 Airport Road (Parcel No. 22-14-31-3080-00000-00A0).
CONTINUE Project No. 2026040057 for a PUD Site Development Plan amendment for Hunter's Ridge Storage at 2730 Airport Road (Parcel No. 22-14-31-3080-00000-00A0) to a time and date certain.

(Item 9b – Continued)

Simone Kenny, Planner, presented the companion request to amend the approved Hunter Ridge Storage PUD site development plan to accommodate the footprint of the approved 190-foot telecommunications tower within a landscape area between outdoor RV parking spaces. *(presentation on file with clerk's office)*

Chair Pennington called for public comment.

Mr. Gelotti spoke in opposition of approving item 9b. Requested enforcement of all buffering, landscaping, and screening commitments from the original site development approval.

Ms. Gelotti highlighted that the tower exceeds the 3-story height intent of the original PUD approval.

Mr. Correll, commented on the scale of the proposed structure relative to the original approval.

Mr. Caliendo, requested maximum buffering, landscape preservation, and lighting restrictions as conditions of any approval. Noted the original approval that contained protections specifically intended to maintain compatibility between the commercial property and surrounding residential community.

Chair Pennington closed public comment.

Mr. Chiumento reminded the BOCC with the exception of a single residential property, the majority of the surrounding area is already buffered and naturally screened by designated wetlands and conservation easements.

Commissioner Carney inquired if any staff has gone to review the site in person.

Ms. Kenny clarified that staff's review of the property had been conducted based solely on submitted plans and documentation. Noted that a telecommunications tower constitutes a special exception/use, which is permissible across all zoning districts and is not subject to the dimensional standards of the Planned Unit Development (PUD). Explained that the BOCC has the authority to impose conditions of approval to address any additional site plan requirements.

Commissioner Dance proposed ensuring the existing landscape is compliant with the original site plan.

UNOFFICIAL

(Item 9b – Continued)

Commissioner Hansen inquired who is responsible for ensuring that the landscape is compliant, should something need to be replaced.

Ms. Kenny clarified that during the permit process of construction, the landscape would be inspected to ensure compliance.

A motion was made by Commissioner Hansen to approve Item 9b with the condition that the applicant fulfill all landscape and buffering requirements of the original PUD site development plan. Seconded by Commissioner Richardson.

Chair Pennington called for a roll call vote.

Deputy Clerk Tiffani Smith captured the following votes:

Commissioner Dance	**"No"**
Chair Pennington	**"Yes"**
Commissioner Carney	**"No"**
Commissioner Hansen	**"Yes"**
Commissioner Richardson	**"I approve"**

Motion carried 3 to 2 with Commissioners Dance and Carney dissenting.

UNOFFICIAL

THIS SPACE INTENTIALLY LEFT BLANK

ITEM 9C – QUASI-JUDICIAL – Project 2026040066 – REQUEST FOR A SPECIAL USE IN THE MH-1 (RURAL MOBILE HOME) DISTRICT – Request for a Special Use for Telecommunication Tower in the MH-1 (Rural Mobile Home) District at 2512 Orange Street. Parcel Number: 19-12-29-5550-00080-0010; Parcel Size: 837,691+/- Square Feet (20+/- Acres). Owner/Applicant: Kevin Ferguson/Gulfstream Towers. (AR 6490).

Flagler County Board of County Commissioners
Public Hearings / Agenda Item 9.c.

Meeting Date: August 17, 2026
Department Contact: Simone Kenny, Senior Planner
Subject: **QUASI-JUDICIAL – Project 2026040066 – REQUEST FOR A SPECIAL USE IN THE MH-1 (RURAL MOBILE HO… DISTRICT – Request for a Special Use for Telecommunication Tower in the MH-1 (… Home) District at 2512 Orange Stree… …er: 19-12-29-5550-00080-0010; Parcel S… … Square Feet (20+/- Acres). Owner/A… … Ferguson/Gulfstream T… …0).** The Board of County Commissione… APPROVE Proj… …0066, finding that the special siting criteri… …nd Development Code Section 3.06.05… …net and therefore approves the Special Us… …munication Tower at 2512 Orange Street …-29-5550-00080-0010).
…oject No. 2026040066, finding that the special siting …a as listed at Land Development Code Section 3.06.05.F. have not been met and therefore denies the Special Use for a Telecommunication Tower at 2512 Orange Street (Parcel 19-12-29-5550-00080-0010).
CONTINUE Project No. 2026040066, on the basis that additional information is needed from staff or the applicant. Based on the presentation and the public hearing, the Board does not have sufficient information to be able to render a decision on the special use request. Continuing the special use request to a time and date certain will provide an opportunity for staff or the applicant to provide additional information.
Should the Board of County Commissioners opt to approve the Special Use request, additional conditions and safeguards may be added as part of the motion for approval of the request.

ITEM CONTINUED TO SEPTEMBER 14, 2026

Overview/Summary:
The request is for approval of a Special Use for a Telecommunications Tower in the MH-1 (Rural Mobile Home) zoning district:

(Item 9c – Continued)

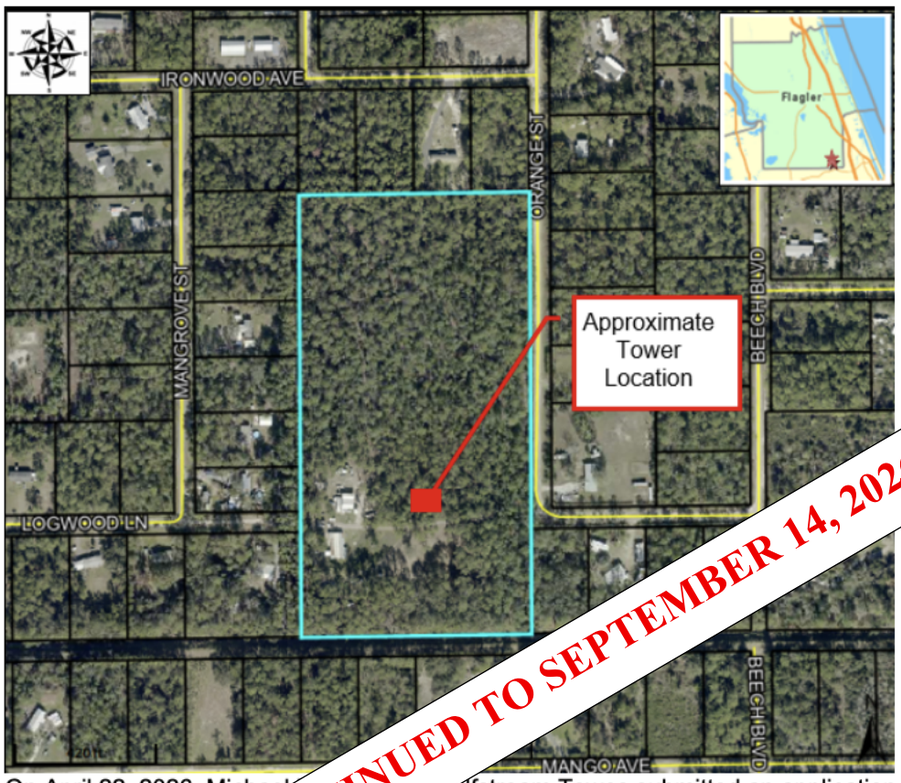

ITEM CONTINUED TO SEPTEMBER 14, 2026

On April 22, 2026, Michael[illegible] Gulfstream Towes submitted an application for a Special Use for a T[illegible]ons Tower on land owned by Kevin and Elizabeth Ferguson. The pr[illegible] a 150' tall camouflaged monopole located within a 4,900+/- squ[illegible]rea on property zoned MH-1 and enclosed with an 8' tall chain lin[illegible]red.

Although th[illegible]urrent proposed tenant is T-Mobile, the proposed tower is designed to allow for a total of three communication providers, allowing a maximum height of 150 feet provided by LDC Sec. 3.06.05.F.8.(g)1.b. The applicant has provided the proposed lease areas on the site plan along with the signed letter attesting they will allow other carriers to co-locate on the subject tower.

As provided by the applicant, there are currently no towers located with 2 miles of the subject property, the minimum search radius required by LDC Sec. 3.06.05.F.8.(e). The applicant has provided an additional 4 mile search radius, and found that there are three towers located with the 4 mile search radius. One tower, owned by STC Two LLC is located at 7185 State Road 100 and is 3.06+/- miles northeast of the subject property. Another tower, owned by Flagler County, is located at 245 County Road 305 is 3.28+/- miles northeast from the subject location. The third tower, owned by Cellco

(Item 9c – Continued)

Partnership, is located at 345 County Road 95 and is 2.56+/- miles southeast from the subject property.

The structure does not require registration with the FAA as it is not located within five miles of an airport. The tower's design will incorporate a break point that will cause the tower to fall within a specified radius completely within the subject park parcel. This tower height (less than 200 feet above grade) does not require lighting or additional review by FAA.

Per LDC Section 3.06.05.A, Special Uses may be allowed in any zoning district.

The Technical Review Committee reviewed this request as part of its May 20, 2026 meeting. All comments have been satisfactorily addressed by the applicant.

The Planning and Development Board voted 6-1 to recommend denial of Project 2026040066, a request for a Special Use for a Telecommunication Tower at 2512 Orange Street, finding that the special citing criteria as listed at LDC Sec. 3.06.05.F. have not been met, specifically criteria 3 and 8, which pertain to the nature of [illegible] on adjacent and nearby properties and the availability of suitable existing to[illegible]ther structures, respectively.

This agenda item is:
__X__ quasi-judicial, requiring disclosure of ex-parte[illegible], or
_____ legislative, not requiring formal disclosure[illegible]mmunication.

Public Notice: Public notice has been pro[illegible]ance with Section 2.07.00 of the LDC.

ITEM CONTINUED TO SEPTEMBER 14, 2026

Strategic Plan:
Focus Area: E[illegible]nment
Goal 2 – [illegible]tain Relationships to Support Effective and Efficient Gov[illegible]
Ob[illegible].4: Establish joint strategies to identify and address needs through leve[illegible] of local resources, such as: City Managers; Park Master Plan; Annual Shore Capital Improvement projects; and the National Community Survey.
Measure EG 2.4.2: Implement procedural and regulatory measures to protect public health, safety, and welfare

Funding Information:
N/A

Recommendations:
OPTIONS FOR THE BOARD: The Board of County Commissioners may:
APPROVE Project No. 2026040066, finding that the special siting criteria as listed at

(Item 9c – Continued)

Land Development Code Section 3.06.05.F. have been met and th… …s the Special Use for a Telecommunication Tower at 2512 Orange S… …9-12-29-5550-00080-0010).
DENY Project No. 2026040066, finding that the spec… …as listed at Land Development Code Section 3.06.05.F. have not b… …herefore denies the Special Use for a Telecommunication Towe… …ge Street (Parcel 19-12-29-5550-00080-0010).
CONTINUE Project No. 20260400… …that additional information is needed from staff or the applicant. Ba… …entation and the public hearing, the Board does not have sufficient in… …able to render a decision on the special use request. Continuing th… …request to a time and date certain will provide an opportunity for st… …ant to provide additional information.
Should the B… …Commissioners opt to approve the Special Use request, addition… …d safeguards may be added as part of the motion for approval of the…

ITEM CONTINUED TO SEPTEMBER 14, 2026

Item continued to September 14, 2026, at 5:30 p.m. under Item 2 Agenda Modifications.

UNOFFICIAL

THIS SPACE INTENTIALLY LEFT BLANK

ITEM 9D – QUASI-JUDICIAL – Project No. 2026010083 – REQUEST FOR AMENDMENT TO PUD DEVELOPMENT AGREEMENT – Request for Amendment to the PUD Development Agreement for Radiance. Parcel Number: 22-12-31-0000-01010-0011; Parcel Size: 608+/- Acres. Owner/Applicant: RLS-KL Radiance/ A. Joseph Posey, Jr. (AR 6293).

Flagler County Board of County Commissioners
Public Hearings / Agenda Item 9.d.

Meeting Date: August 17, 2026

Department Contact: Simone Kenny, Senior Planner

Subject: **QUASI-JUDICIAL – Project No. 2026010083 – REQUEST FOR AMENDMENT TO PUD DEVELOPMENT AGREEMENT – Request for Amendment to the PUD Development Agreement for Radiance. Parcel Number: 22-12-31-0000-01010-0011; Parcel Size: 608+/- Acres. Owner/Applicant: RLS-KL Radiance/ A. Joseph Posey, Jr. (AR 6293).** The Board of County Commissioners may:

APPROVE Project 2026010083 for the Amendment to the Radiance PUD Development Agreement, finding that the proposed PUD Development Agreement Amendment is consistent with the Flagler County Comprehensive Plan and the Flagler County Land Development Code and subject to either:

OPTION A: all development conditions within the proposed amendment to the Radiance PUD Development Agreement as approved through Ordinance No. 2026-____ OR

OPTION B: The Planning and Development Board's recommendation to adjust the PUD Development Agreement with the following;

a. add language to describe the number of Certificates of Occupancy (COs) that trigger the turning lanes described in the traffic study, specifically that the northbound turn left turn lane will be required prior to the 388th CO and the southbound right turn lane will be required prior to the 775th CO.

b. add language to describe the amenity center trigger points with 9 months to commence and 18 months to complete construction of the Phase 1 amenities (pool, clubhouse, and pickleball courts); and

c. clarify the language in Sec. 4.10(g).

DENY Project 2026010083 for the Amendment to the Radiance PUD Development Agreement.

CONTINUE Project 2026010083 for the Amendment to the Radiance PUD Development Agreement to a time and date certain.

Overview/Summary:
This request is quasi-judicial in nature (not legislative) and does require disclosure of ex parte communication.

(Item 9d – Continued)

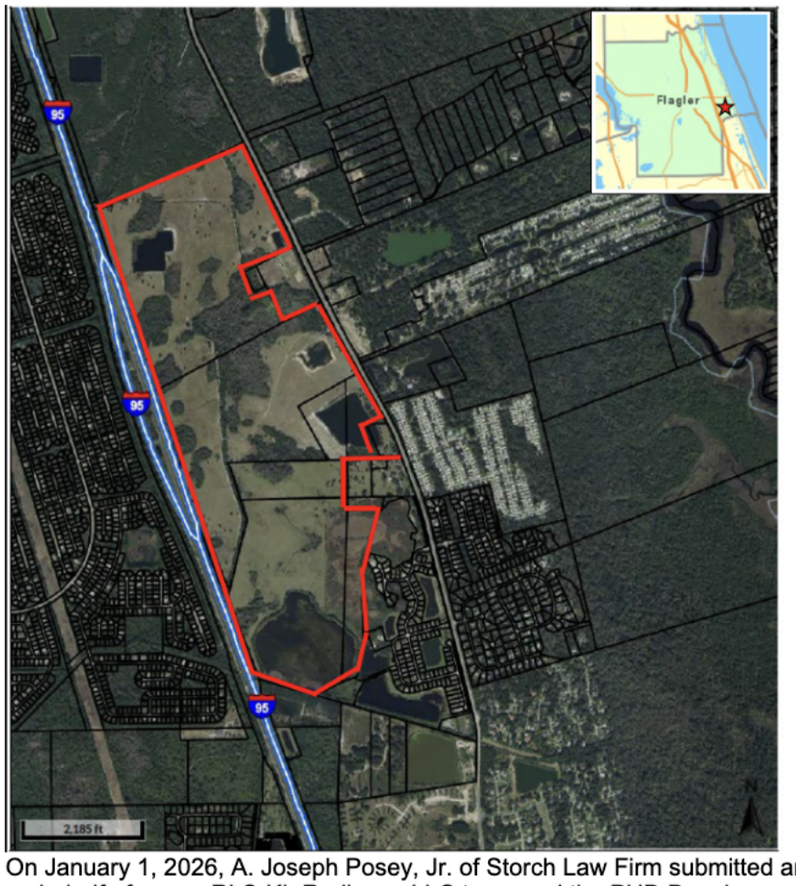

On January 1, 2026, A. Joseph Posey, Jr. of Storch Law Firm submitted an application on behalf of owner RLS-KL Radiance LLC to amend the PUD Development Agreement for Radiance, formerly known as Eagle Lakes. Eagle Lakes was originally approved through the adoption of Ordinance 2005-02 and amended through Ordinance 2005-26. The PUD development agreement expired and was reinstated by amendment through Ordinance 2014-03 for 535+/- acres. The PUD Development agreement was then again modified to the current PUD development agreement through Ordinance 2022-10 which also added 78+/- acres for a total of 613+/- acres and allows for the development of a maximum of 1,200 single-family residential units, 425 on the Northern Lands (now known as Radiance) and 775 on the Southern Lands (now known as Cresswind, an age-restricted community).

This amendment to the Radiance PUD was prompted by the owner's desire to update language within the agreement, to address changing market needs, to address an updated traffic study, and to add dimensional requirements regarding the proposed amenity centers.

(Item 9d – Continued)

The applicant is proposing to:

1. add enforceable language to Sec. 2.3 regarding the age-restriction on the Southern Lands (Cresswind) as approved by the Flagler County School Board.
2. update Sec. 3.1(b) to reflect an updated traffic study. Whereas before the Developer and the County agreed that the Developer would construct a roundabout at the entrance of the Southern property (Cresswind) in exchange for dollar-for-dollar credits on traffic impact fees, the updated traffic study has determined that only a northbound left turn lane is warranted at 50 percent build out of the total project and that a southbound right turn lane is warranted at 100 percent build out of the Southern property (Cresswind). The updated language removes the requirement to construct the roundabout and the requirement for the County to provide traffic impact fee credits.
3. add clarifying language to Sec. 4.4 for the maximum number of lots to be used for the placement of temporary sales, trailers, and Model Homes.
4. add Sec. 4.10(g) to allow the Developer to continue using the existing entrance serving the Southern property (Cresswind), located in the same area as the future final entrance, as a temporary construction entrance for land clearing, installation of infrastructure, vertical construction, delivery of materials, and other construction traffic.
5. update Sec. 4.12(b)ii. to provide dimensional requirements for the future amenity centers, to allow administrative review and approval by staff, and to remove the timing requirement to commence construction.
6. add Sec. 4.14(g) to modify the landscape screening and buffer along the northerly entrance to the Southern Lands (Cresswind) as identified in Exhibit 'L' so long as the modified buffer maintains a minimum visual opacity of fifty percent.
7. modify Sec 4.18, Table of Site Development Requirements, to:

    a. add minimum garage front setback of 20 feet and minimum courtyard or side-entry garage setback on 50' and 60' lots of 15 feet.
    b. reduce minimum rear setback from 20 feet to 10 feet.
    c. increase maximum impervious coverage from 55, 60 and 65 to 75 percent.

Lot Type	40'	50'	60'
Minimum lot size	4,800 sf	6,000 sf	7,000 sf
Minimum lot width	40'	50'	60'
Minimum front setback (1)(3)	20'	20'	20'

(Item 9d – Continued)

Minimum garage front setback (3)	20'	20'	20'
Minimum rear setback	~~20~~ 10'	~~20~~ 10'	~~20~~ 10'
Minimum side yard setback	5'	5'	5'
Maximum building height	Two Stories	Two Stories	Two Stories
Maximum impervious coverage	~~65~~ 75%	~~60~~ 75%	~~55~~ 75%
Minimum house size (2)	1,300 sf	1,600 sf	2,000 sf
Minimum garage	2 Car Garage Fully Enclosed with door	2 Car Garage Fully Enclosed with door	2 Car Garage Fully Enclosed with door

The reduced rear setbacks and increases of maximum impervious coverage to 75 percent are approved through an updated ERP permit issued by SJRWMD (Permit No. 97789-10).

The application for the Amendment to the PUD Development Agreement was discussed by the Technical Review Committee on February 18, 2026 and June 17, 2026. The applicant has satisfactorily addressed the TRC comments except for Staff's request to describe the number of Certificates of Occupancy (COs) that trigger the turning lanes described in the traffic study to the development agreement.

This item was heard at the July 14, 2026 Planning and Development Board regular meeting. The Board voted 6-0 to recommend approval of the amendment to the Radiance PUD Development Agreement subject to the following conditions:

a. add language to describe the number of Certificates of Occupancy (COs) that trigger the turning lanes described in the traffic study, specifically that the northbound turn left turn lane will be required prior to the 388th CO and the southbound right turn lane will be required prior to the 775th CO.
b. add language to describe the amenity center trigger points with 9 months to commence and 18 months to complete construction of the Phase 1 amenities (pool, clubhouse, and pickleball courts); and
c. clarify the language in Sec. 4.10(g).

BCC review authority: Section 3.04.02.F, Land Development Code, Action by the Planning and Development Board and Board of County Commissioners.

(Item 9d – Continued)

This agenda item is:
__X__ quasi-judicial, requiring disclosure of ex-parte communication; or
_____ legislative, not requiring formal disclosure of ex-parte communication.

Public Notice: Public notice has been provided for this application according to LDC Section 2.07.00. No comments have been received as a result of the public notice.

Strategic Plan:
Focus Area: Effective Government
Goal 2 – Build and Maintain Relationships to Support Effective and Efficient Government.
Objective EG 2.4: Establish joint strategies to identify and address needs through leveraging of local resources, such as: City Managers; Park Master Plan; Annual Shore Capital Improvement projects; and the National Community Survey.
Measure EG 2.4.2: Implement procedural and regulatory measures to protect public health, safety, and welfare

Funding Information:
N/A

Recommendations:
OPTIONS FOR THE BOARD: The Board of County Commissioners may:
APPROVE Project 2026010083 for the Amendment to the Radiance PUD Development Agreement, finding that the proposed PUD Development Agreement Amendment is consistent with the Flagler County Comprehensive Plan and the Flagler County Land Development Code and subject to either:
OPTION A: all development conditions within the proposed amendment to the Radiance PUD Development Agreement as approved through Ordinance No. 2026-____ OR
OPTION B: The Planning and Development Board's recommendation to adjust the PUD Development Agreement with the following;
a. add language to describe the number of Certificates of Occupancy (COs) that trigger the turning lanes described in the traffic study, specifically that the northbound turn left turn lane will be required prior to the 388th CO and the southbound right turn lane will be required prior to the 775th CO.
b. add language to describe the amenity center trigger points with 9 months to commence and 18 months to complete construction of the Phase 1 amenities (pool, clubhouse, and pickleball courts); and
c. clarify the language in Sec. 4.10(g).
DENY Project 2026010083 for the Amendment to the Radiance PUD Development Agreement.
CONTINUE Project 2026010083 for the Amendment to the Radiance PUD Development Agreement to a time and date certain.

(Item 9d – Continued)

Chair Pennington asked for ex-parte disclosure.

Chair Pennington, Commissioner Hansen, Commissioner Richardson, and Commissioner Carney reported no prior communications.

Commissioner Dance disclosed that adjacent property is held in a family trust of which he is a beneficiary. Filed Form 8B Memorandum of Voting Conflict and abstained from voting on this item. The following Form 8B Memorandum is also on file with the Clerk's Office:

FORM 8B MEMORANDUM OF VOTING CONFLICT FOR COUNTY, MUNICIPAL, AND OTHER LOCAL PUBLIC OFFICERS

LAST NAME—FIRST NAME—MIDDLE NAME	NAME OF BOARD, COUNCIL, COMMISSION, AUTHORITY, OR COMMITTEE
DANCE, ANDREW S.	FLAGLER COUNTY COMMISSION
MAILING ADDRESS: 1769 E. MOODY BLVD	THE BOARD, COUNCIL, COMMISSION, AUTHORITY OR COMMITTEE ON WHICH I SERVE IS A UNIT OF: ☐ CITY ☒ COUNTY ☐ OTHER LOCAL AGENCY
CITY: BUNNELL, FL COUNTY: FLAGLER	NAME OF POLITICAL SUBDIVISION: BOARD OF COUNTY COMMISSION
DATE ON WHICH VOTE OCCURRED: 8.17.26	MY POSITION IS: ☒ ELECTIVE ☐ APPOINTIVE

WHO MUST FILE FORM 8B

This form is for use by any person serving at the county, city, or other local level of government on an appointed or elected board, council, commission, authority, or committee. It applies to members of advisory and non-advisory bodies who are presented with a voting conflict of interest under Section 112.3143, Florida Statutes.

Your responsibilities under the law when faced with voting on a measure in which you have a conflict of interest will vary greatly depending on whether you hold an elective or appointive position. For this reason, please pay close attention to the instructions on this form before completing and filing the form.

INSTRUCTIONS FOR COMPLIANCE WITH SECTION 112.3143, FLORIDA STATUTES

A person holding elective or appointive county, municipal, or other local public office MUST ABSTAIN from voting on a measure which would inure to his or her special private gain or loss. Each elected or appointed local officer also MUST ABSTAIN from knowingly voting on a measure which would inure to the special gain or loss of a principal (other than a government agency) by whom he or she is retained (including the parent, subsidiary, or sibling organization of a principal by which he or she is retained); to the special private gain or loss of a relative; or to the special private gain or loss of a business associate. Commissioners of community redevelopment agencies (CRAs) under Sec. 163.356 or 163.357, F.S., and officers of independent special tax districts elected on a one-acre, one-vote basis are not prohibited from voting in that capacity.

For purposes of this law, a "relative" includes only the officer's father, mother, son, daughter, husband, wife, brother, sister, father-in-law, mother-in-law, son-in-law, and daughter-in-law. A "business associate" means any person or entity engaged in or carrying on a business enterprise with the officer as a partner, joint venturer, coowner of property, or corporate shareholder (where the shares of the corporation are not listed on any national or regional stock exchange).

* * * * * * * * * * * * * * * * *

ELECTED OFFICERS:

In addition to abstaining from voting in the situations described above, you must disclose the conflict:

PRIOR TO THE VOTE BEING TAKEN by publicly stating to the assembly the nature of your interest in the measure on which you are abstaining from voting; *and*

WITHIN 15 DAYS AFTER THE VOTE OCCURS by completing and filing this form with the person responsible for recording the minutes of the meeting, who should incorporate the form in the minutes.

* * * * * * * * * * * * * * * * *

APPOINTED OFFICERS:

Although you must abstain from voting in the situations described above, you are not prohibited by Section 112.3143 from otherwise participating in these matters. However, you must disclose the nature of the conflict before making any attempt to influence the decision, whether orally or in writing and whether made by you or at your direction.

IF YOU INTEND TO MAKE ANY ATTEMPT TO INFLUENCE THE DECISION PRIOR TO THE MEETING AT WHICH THE VOTE WILL BE TAKEN:

- You must complete and file this form (before making any attempt to influence the decision) with the person responsible for recording the minutes of the meeting, who will incorporate the form in the minutes. (Continued on page 2)

CE FORM 8B - EFF. 11/2013 PAGE 1
Adopted by reference in Rule 34-7.010(1)(f), F.A.C.

(Item 9d – Continued)

APPOINTED OFFICERS (continued)

- A copy of the form must be provided immediately to the other members of the agency.
- The form must be read publicly at the next meeting after the form is filed.

IF YOU MAKE NO ATTEMPT TO INFLUENCE THE DECISION EXCEPT BY DISCUSSION AT THE MEETING:

- You must disclose orally the nature of your conflict in the measure before participating.
- You must complete the form and file it within 15 days after the vote occurs with the person responsible for recording the minutes of the meeting, who must incorporate the form in the minutes. A copy of the form must be provided immediately to the other members of the agency, and the form must be read publicly at the next meeting after the form is filed.

DISCLOSURE OF LOCAL OFFICER'S INTEREST

I, ANDREW S. DANCE, hereby disclose that on AUGUST 17, 20 26:

(a) A measure came or will come before my agency which (check one or more)

X inured to my special private gain or loss;

___ inured to the special gain or loss of my business associate, _____;

X inured to the special gain or loss of my relative, MOTHER;

___ inured to the special gain or loss of _____, by whom I am retained; or

___ inured to the special gain or loss of _____, which is the parent subsidiary, or sibling organization or subsidiary of a principal which has retained me.

(b) The measure before my agency and the nature of my conflicting interest in the measure is as follows:

Application for an amendment to a PUD that abuts land owned by my mother, currently in a trust of which I am a beneficiary. Conditions within the PUD materially affect the adjacent property's value.

If disclosure of specific information would violate confidentiality or privilege pursuant to law or rules governing attorneys, a public officer, who is also an attorney, may comply with the disclosure requirements of this section by disclosing the nature of the interest in such a way as to provide the public with notice of the conflict.

August 17, 2026
Date Filed

Signature

NOTICE: UNDER PROVISIONS OF FLORIDA STATUTES §112.317, A FAILURE TO MAKE ANY REQUIRED DISCLOSURE CONSTITUTES GROUNDS FOR AND MAY BE PUNISHED BY ONE OR MORE OF THE FOLLOWING: IMPEACHMENT, REMOVAL OR SUSPENSION FROM OFFICE OR EMPLOYMENT, DEMOTION, REDUCTION IN SALARY, REPRIMAND, OR A CIVIL PENALTY NOT TO EXCEED $10,000.

CE FORM 8B - EFF. 11/2013
Adopted by reference in Rule 34-7.010(1)(f), F.A.C.

PAGE 2

(Item 9d – Continued)

Chuck Miranda, Interim Growth Management Director, presented proposed amendments to the 608-acre Radiance/Cresswind PUD Development Agreement (1,200 total units: 425 Radiance / 775 Cresswind). Noted that phase 1 is now complete and is awaiting permitting of residential homes. Key modifications included: *(presentation on file with the clerk's office)*

- Add enforceable language regarding age-restrictions on the Southern Lands as approved by the Flagler County School Board.
- Eliminating the requirement for an unwarranted roundabout, replacing it with a northbound left-turn and southbound right-turn lanes.
- Updating model home and temporary sales trailer lot allowances.
- Add language to allow the developer to continue using the existing entrance serving Cresswind as a temporary construction entrance.
- Modify language to provide dimensional requirements for future amenity centers and remove timing requirements for construction commencement.
- Modify landscape screening and buffering along the northerly entrance of Cresswind.
- Adjusting lot setbacks for garage front setback, courtyard/ side-entry garage setback, rear setback and impervious coverage.

Provided a Transportation Impact Fee summary. Noting the current transportation impact fee is $1648 per single family unit, and the total money generated is to be used for the unwarranted traffic circle. Proposed using the impact fee funds to fund the Old Kings Rd Multi-Use Trail from SR 100 to Volusia County Line or the Old Kings Rd four lane widening.

Commissioner Hansen questioned if money needed to still be put towards the right and left turn lanes.

Mr. Miranda noted that the turn lanes are considered Capacity Improvements and would be the developers responsibility.

Eric Morrissette, representing Kolter, reflected on the project's extended timeline. Explained that cumulative inflationary impacts on construction costs since 2022 contributed to the decision to pause progression on the roundabout until further direction could be discussed with the BOCC.

Joseph Posey, Attorney for the applicant, further spoke on the proposed changes. Noted that construction of the roundabout would require County maintenance. Highlighted there is no increases to density, changes to land uses or boundaries and the amendment adds no public burdens.

(Item 9d – Continued)

UNOFFICIAL

Chair Pennington called for public comment.

Raymond Royer, Painters Hill resident, suggested the developer consider donating lots to reserve land for a future fire station to serve the growing area.

Roberta Paleta, Ormond Beach resident, expressed support of eliminating the roundabout and expressed concern regarding 10-foot rear setbacks between homes being too small.

Art Seager, Eagle Lakes resident, expressed concern regarding 75% lot impervious coverage and impacts on Eagle Lakes drainage.

Melanie Thompson, John Anderson Highway resident, supported removal of the roundabout requirement. Questioned the need for telecommunication towers on Old Kings to accommodate the anticipated growth.

William Fedun, Flagler Beach resident, requested clarification that the emergency access road adjacent to his property would not be used for construction traffic.

Marilyn Dance, Flagler Beach resident, requested clarity on what limitations can be put into place to prevent high levels of traffic on the emergency access road.

Chair Pennington closed public comment.

Mr. Miranda confirmed the subdivisions emergency road will be gated and locked for emergency use if the main road is blocked.

Mr. Posey referenced specific construction access controls under Section 4.10A. Confirmed he is not attempting to amend the previously discussed language in the PUD, and stated the applicant is willing to compromise with residents to restrict construction traffic on the emergency access road to business hours or no weekends.

(Item 9d – Continued)

UNOFFICIAL

There was extensive BOCC discussion regarding proposed language additions concerning the establishment of an interim construction entrance and the southerly emergency access road.

Mr. Miranda clarified language in Section 4.10G and 4.10A. Stated he does not recall any resistance at the time regarding the construction access. Noted potential residential disturbances from construction traffic. Confirmed that the 4.10A language has always been included.

Commissioner Dance asked if the traffic study accommodated heavy trucks coming in and out of the gate. Stated traffic concerns and growth on Old Kings Rd.

Kirsten Fawcett, representing Lassiter Transportation Group, clarified that the primary focus of the traffic study was not the traffic volume generated by the access point itself, but rather evaluating the intersection at Audubon Way to determine whether a roundabout or traffic signal was warranted.

Mr. Posey confirmed with the applicant that an agreement that hours of operation should be incorporated into the Planned Unit Development (PUD). Stated that five years following the recording of the final plat of the last phase of the southerly, the access point would be permanently closed to general traffic and restricted solely to emergency service vehicles.

There was extensive BOCC discussion negotiating specific language for construction access restrict construction traffic of the knox box emergency access road to business hours, no weekends, and amending the access road closure to 60 days after completion of the southerly land's amenities.

A motion was made by Commissioner Hansen to approve Item 9d under Option B, incorporating Planning Board recommendations for turn-lane CO triggers (northbound left turn at 388th CO; southbound right turn at 775th CO), amenity center triggers (9-month commencement / 18-month completion from first CO of the Southernly Lands), with the further addition to Section 4.10A restricting emergency access road construction use to business hours (8:00 a.m. to 5:00 p.m., Monday through Friday, no weekends), requiring Knox box gate security for emergency services only, and terminating all construction access use 60 days following completion of the Southern Lands amenity center. Seconded by Commissioner Richardson.

Chair Pennington called for a roll call vote.

(Item 9d – Continued)

UNOFFICIAL

Deputy Clerk Tiffani Smith captured the following votes:

Chair Pennington	**"Yes"**
Commissioner Hansen	**"Yes"**
Commissioner Richardson	**"Yes"**
Commissioner Carney	**"Yes"**
Commissioner Dance	**Abstained (Form 8B filed)**

Motion carried unanimously.

ITEM 10A - COUNTY ADMINISTRATOR REPORT/COMMENTS

Interim County Administrator Adam Mengel had no additional report.

ITEM 10B - COUNTY ATTORNEY REPORT/COMMENTS

Mr. Rodriguez reported that Flagler County was named as a defendant in a multi-party federal lawsuit filed by a non-profit organization challenging the constitutionality of sexual offender registry ordinances across Florida counties and municipalities. Noted that the State of Florida is the primary defendant and that the complaint contains no allegations specific to Flagler County enforcement.

The BOCC granted consensus for the Mr. Rodriguez to waive formal service of process and handle the matter in-house, preparing a motion to dismiss on behalf of Flagler County, with no outside counsel costs anticipated.

ITEM 10C – COMMUNITY OUTREACH

The BOCC offered brief closing remarks, wishing primary election candidates well and noting canvassing board schedules for August 18, 2026.

ADJOURNMENT

UNOFFICIAL

The meeting was adjourned by consensus at 9:20 p.m.

APPROVED AND ADOPTED _____

ATTEST:

FLAGLER COUNTY BOARD OF COUNTY COMMISSIONERS

_____
Tom Bexley
Clerk of the Circuit Court & Comptroller

_____
Leann Pennington
Chair

UNOFFICIAL

FLAGLER COUNTY BOARD OF COUNTY COMMISSIONERS

SEPTEMBER 2, 2026

REGULAR MEETING

Present: Vice Chair Kim Carney (*presiding*), Commissioners Andrew Dance, Gregory Hansen, Pam Richardson, Interim County Administrator Adam Mengel, County Attorney Michael Rodriguez and Deputy Clerk Tiffani Smith

Absent: Chair Leann Pennington

Acting Chair Carney called the meeting to order at 9:00 a.m. in the Board Chambers of the Government Services Building in Bunnell, Florida.

UNOFFICIAL

ITEM 1 - PLEDGE TO THE FLAG AND MOMENT OF SILENCE

Acting Chair Carney led the Pledge to the Flag and requested a moment of silence.

ITEM 2 - ADDITIONS, DELETIONS AND MODIFICATIONS TO THE AGENDA

Acting Chair Carney announced the following:

- 8/27/26 - Deleted duplicated recommendation text from Consent Agenda Items; corrected
- Consent Item 7h from $310,000 to $379,523
- Added the word "None" to General Business (Item 8)
- Under Public Hearings (Item 9), deleted staff recommends from Item 10d, Commission Reports

ITEM 3 - ANNOUNCEMENTS BY THE CHAIR

Acting Chair Carney announced the following upcoming meetings and events:

- September 3, 2026, at 1:00 p.m. – 5:00 p.m.: The Board will conduct individual interviews with candidates for the position of County Administrator in various conference rooms throughout the Government Services Building.
- September 3, 2026, at 5:01 p.m.: First Public Hearing on Truth in Millage (TRIM) for the FY 2026-27 Tentative Budget, followed by public group interviews and a meet-and-greet with County Administrator candidates in the Commission Chambers.
- September 4, 2026, at 9:00 a.m.: Special Meeting to discuss the selection of the new County Administrator.
- September 11, 2026: 25th Anniversary 9/11 Memorial Tribute Climb. Opening ceremonies open to the public; more information available at 911memorialclimb.com.

ITEM 4A – RECOGNITIONS

None

ITEM 4B1 – PROCLAMATIONS – PROCLAMATION RECOGNIZING SEPTEMBER 2026 AS PREPAREDNESS MONTH

Commissioner Hansen read the proclamation.

(Item 4b1 – Continued)

A motion was made by Commissioner Hansen to adopt the proclamation. Seconded by Commissioner Dance.

Acting Chair Carney called the question. Motion carried unanimously.

Jonathan Lord, Emergency Management Director thanked the Board and highlighted the following:

- September represents the peak of hurricane season.
- Noted recent tropical activity, including the remnants of Dolly and Hurricane Edward.
- Emergency Management operates with a core staff of five supported by 30 to 32 active volunteers averaging at least four hours of service per week.
- Announced an upcoming emergency preparedness educational session specifically designed for homeschool students and families.
- Provided an update on the Emergency Preparedness Facility / Expo Center, anticipating a temporary Certificate of Occupancy allowing a ribbon-cutting ceremony later in September, with full completion in the coming months.

ITEM 4B2 – PROCLAMATIONS – PROCLAMATION RECOGNIZING OCTOBER 2026 AS BREAST CANCER AWARENESS MONTH

Commissioner Richardson read the proclamation.

A motion was made by Commissioner Richardson to adopt the proclamation. Seconded by Commissioner Hansen.

Acting Chair Carney called the question. Motion carried unanimously.

Denyse Bales-Chubb, President and CEO for AdventHealth Palm Coast/Flagler and St. Johns markets, presented breast cancer statistics, while highlighting a decline in mortality rates due to early detection and routine screenings.

Sean Rhoden, Director of Oncology Operations at AdventHealth, spoke on providing coordinated, compassionate cancer care close to home.

Rosa Somsky, Breast Navigator for AdventHealth, shared her role guiding patients from diagnosis through survivorship. Highlighted that Pink Army donations supply vital post-surgical garments and radiant treatment wraps for radiation patients.

ITEM 4C1 – PRESENTATIONS – CLERK OF COURT BUDGET ***(Clerk of Court's 5-page comment on file with the Clerk's Office)***

Tom Bexley, Clerk of the Circuit Court and Comptroller, gave a presentation regarding his office's constitutional role and budget:

- Recognized September as Prostate Cancer Awareness Month, urging men over 50 to get PSA screenings.

(Item 4c1 – Continued)

- Clarified the Clerk is an independently elected constitutional officer under the Florida Constitution, serving as ex-officio clerk to the BOCC, auditor, recorder, and custodian of county funds.
- Expressed high regard for county staff while cautioning that inaccurate public criticism impairs morale and public trust.
- Pointed out that the Clerk's budget comprises less than 3% of the County General Fund. Over the past 10 years, the office returned over $2.4 million in excess fees to the General Fund and earned over $20 million in interest on county investments over the past five years.
- Noted that the central cashiering renovation was a public-facing facility modernization largely funded by excess fees returned to the Board.
- Requested that the Board restore approximately $77,000 removed from the Clerk's budget during the previous budget workshop.

BOCC discussion ensued regarding formalizing new commissioner onboarding with constitutional offices.

Commissioner Dance noted one of the commissioners in the majority vote that modified the Clerk's budget will need to bring the vote back.

Mr. Bexley thanked the BOCC for their consideration.

ITEM 4C2 – PRESENTATIONS – SMA HEALTHCARE INC. PRESENTATION

Andrew Williams, Senior Director of Food Service/Operations at SMA Healthcare, presented an operational update on SMA programs:

- Central Receiving Facility: Completion scheduled for November 2026. Secured $750,000 in legislative appropriation; actively seeking $4.2 million in recurring funding following a tour with the DCF Secretary.
- Gala of Light: Annual fundraising gala scheduled for November 7, 2026, at Hammock Dunes.
- Asset Center Pharmacy: Fully open at 103 E. Moody Blvd, providing wraparound prescription fulfillment and free countywide home delivery to resolve transportation challenges.
- Primary Care Clinic: Expanded to serve 586 citizens year-to-date in partnership with Steve Civitelli and DOH-Flagler.
- Crisis Triage and Treatment Unit & Asset Center: Completed 2,100 free behavioral health screenings and over 1,500 Baker Act/Marchman Act transports in collaboration with Sheriff Rick Staley.

Letisha Tennant, Assistant Program Director of WARM, reported on the WARM program statistics. Ms. Tennant shared her personal story of recovery through WARM. Provided the 24/7 Helpline / Mobile Crisis Response number: 1-800-539-4228.

(Item 4c2 – Continued)

The BOCC commended SMA Healthcare.

Acting Chair Carney noted the Access Center lease renewal is scheduled for review later in September.

ITEM 4C3 – PRESENTATIONS – S.R. A1A SEAWALL PROJECT COMPLETION VIDEO

Hamid Tabassian, County Engineer, introduced a video produced by the Florida Department of Transportation (FDOT) celebrating the completion of the State Road A1A Buried Seawall Project.

Commissioner Dance noted positive recognition of the project.

Mr. Tabassian commented on the partnerships.

Commissioner Richardson spoke in approval of the completed project.

Acting Chair Carney discussed dune plantings and noted FDOT plans to repave SR A1A in Flagler Beach following the conclusion of Reach II heavy construction.

ITEM 5A – COMMUNITY OUTREACH

Melanie Thompson, Flagler County resident**,** voiced concerns regarding the closure of the household hazardous waste drop-off facility on Old Kings Road and the City of Bunnell's approval of a 600-acre landfill on Route 100.

Commissioner Hansen clarified that the hazardous waste drop-off facility will remain open through September 18, 2026, and the County plans to possibly offer drop-off days.

Commissioner Dance noted that hazardous waste drop-off location may have amnesty days and suggested rotating drop-off locations across the county, tracking disposal metrics over a one-year trial.

Acting Chair Carney noted her September 16th Town Hall will address the hazardous waste transition plan.

David Eckert, Hammock Dunes CDD resident, urged the Board and constitutional officers to leverage artificial intelligence (AI) and automated data modeling to enhance efficiency, particularly for modeling Municipal Service Benefit Units (MSBUs).

(Item 5a – Continued)

Darlene Shelley, Palm Coast resident**,** expressed concerns regarding rapid development, wetland destruction, traffic congestion on SR 100/Seminole Woods, and the City of Bunnell's landfill approval.

Adam Mengel, Interim County Administrator, spoke on the County's Innovation Technology Department actively exploring AI tools and decision units to improve operational workflows.

The BOCC discussed municipal jurisdictional limits, Florida Association of Counties home rule advocacy, state preemption of local wetland regulations by the Florida Legislature, and upcoming reviews of the County Land Development Code (LDC).

ITEM 5B – BOARD COMMENTS ON CONSENT ITEMS

Commissioner Dance recognized Dr. Stephen Civitelli, Florida Department of Health Director, and Chief Strobridge in attendance.

Commissioner Richardson expressed appreciation to Dr. Civitelli and community members for their engagement.

Acting Chair Carney commended the Clerk of the Circuit Court and Comptroller's Office for prompt annual processing of emergency medical services billing write-offs.

CONSENT AGENDA – ITEMS 6A THROUGH 7I

A motion was made by Commissioner Hansen to approve the Consent Agenda. Seconded by Commissioner Dance.

Acting Chair Carney called the question. Motion carried unanimously.

The following items were approved as part of the Consent Agenda:

ITEM 6A – BILLS AND RELATED REPORTS

The report(s) of funds withdrawn from the County depositories by the Flagler County Clerk of the Circuit Court and the Revenue Collected Report presented in the compliance with the provisions of Section 136.03, Florida Statute as listed below:

- Disbursement Report for Week Ending August 7, 2026
- Disbursement Report for Week Ending August 14, 2026

ITEM 6B – APPROVAL OF BOARD MEETING MINUTES

The following minutes were approved as part of the Consent Agenda:

- July 22, 2026, Joint Workshop with the City of Flagler Beach City Commission
- August 3, 2026, Regular Meeting

ITEM 6C – CLERK: WRITE-OFF UNCOLLECTIBLE ACCOUNTS RECEIVABLE

Flagler County Board of County Commissioners
Consent: Constitutional Officers / Agenda Item 6.c.

Meeting Date:	September 2, 2026
Department Contact:	Brian Eichinger, OMB Manager
Subject:	**Clerk: Write-Off Uncollectible Accounts Receivable.**

Overview/Summary:
Digitech provided EMS Ambulance Billing and Reporting services for the period of February 2024, through September 2025. The accounts during this time frame reflect a balance of $1,555,088.12 in uncollectible receivables.

Patient details are available for Open Aged Receivable accounts totaling $1,555,088.12.

Contracting with a Collection Agency as an attempt to recover these receivables is an option. However, previous Boards did not want to pursue the debts in this manner considering residents may be hesitant to call 911 during emergencies over the possibility of financial repercussions.

Strategic Plan:
Focus Area: Effective Government
Goal 1 — Maintain Financial Stability

Funding Information:
The removal of these unrecoverable debt accounts will have no effect on the fund's revenues or expenses. Any payments received by the County for these accounts after the adjustment would be reported as General Fund Revenue.

Recommendations:
Request the Board approve the write-off of uncollectible accounts receivable related to ambulance billing in the amount of $1,555,088.12.

ITEM 6D – CLERK: WRITE-OFF UNCOLLECTIBLE ACCOUNTS RECEIVABLE

Flagler County Board of County Commissioners
Consent: Constitutional Officers / Agenda Item 6.d.

Meeting Date: September 2, 2026
Department Contact: Brian Eichinger, OMB Manager
Subject: **Clerk: Write-Off Uncollectible Accounts Receivable.**

Overview/Summary:
The County invoices for various operating services, including Health and Human Services Day Care, Waste Utilities for garbage collection, Airport for hangar rental and accounts receivables are recorded for transactions such as Non-Sufficient Fund (NSF) checks.

The write-off is for services that were billed in Munis from April 2022 to September 2025. The uncollectible amounts are as follows:

- Health and Human Services - $13,422.35; General Fund
  - Adult Day Care Services

- Waste Utility - $123,303.05; Fund 1405
  - Garbage collection was previously billed to residents for the period between the receipt of a Certificate of Occupancy and the Solid Waste charge being included on the property tax bills.
  - $50,000 is included in the 2025-2026 Adopted Budget within Fund 1405. A budget transfer is needed for the balance of $73,304.

- Airport - $25,816.35; Fund 1401
  - Hangar rent
  - Airport Fund 1401 will use existing operating funds in the 2025-2026 Adopted Budget to cover write-off expense.

- Miscellaneous - $2,123.77;
  - Non-sufficient funds and other accounts receivable in General Fund and Funds 1110, 1181, 1405 and 1501.

Strategic Plan:
Focus Area: Effective Government
Goal 1 — Maintain Financial Stability

Funding Information:
The removal of these unrecoverable debt accounts will have no effect on the fund's revenues or expenses. Any payments received by the County for these accounts after the adjustment would be reported as Revenue.

For Fund 1405 Residential Solid Waste, funding in the amount of $50,000 for Write Offs

/ Shortages was included in the FY 2025-2026 Adopted Budget. The balance of $73,304 will be appropriated upon approval of the Budget Transfer from Fund 1405 Reserves.

Recommendations:
Request the Board approve the write-off of uncollectible accounts receivable in the amount of $164,665.52 and approval of the Fund 1405 Budget Transfer from Reserves to Operating in the amount of $73,304.

ITEM 7A – APPROVAL OF OPENGOV CONTRACT INCREASE

The following request was approved as part of the Consent Agenda:

Flagler County Board of County Commissioners
Consent: BOCC Departments / Agenda Item 7.a.

Meeting Date:	September 2, 2026
Department Contact:	Jessica Martin, Procurement Coordinator, Kelly Bowman, Procurement Coordinator, Brian Eichinger, OMB Manager
Subject:	**Approval of OpenGov Contract Increase.** Request the Board approve the annual spend for the remaining term of the contract.

Overview/Summary:
As Flagler County continues to grow, the complexity of the County's procurement operations will continue to increase. The Office of Procurement and Contracts (OPC) must continue to modernize its operations and deploy reliable technology to support a smooth procurement process and efficient procurement functions. OpenGov has been unanimously selected by the budget and procurement teams as the vendor capable of meeting our current and evolving future needs.
Benefits of OpenGov for procurement:

- Purpose-built comprehensive procurement suite to: o Develop solicitations through automation and pre-built templates with guided workflows.
- Standardize proposal evaluation and bid award processes.
- Streamline contract management and vendor management.
- Advance performance reporting.
- Maintain strong internal control systems and compliance.
- Increased supplier outreach and competition by leveraging existing vendor pools from surrounding cities and counties that use OpenGov.
- Standard solicitation summary reports that can support recommended contract awards for Board consideration.
- Data-driven insights with dashboards, reports,

To maintain continuity, the Office of Procurement and Contracts is requesting approval for an increase of $54,603.70 to the existing OpenGov contract for Cloud-Based Procurement Solutions. This adjustment reflects a 4.3% increase, which is below the standard 5% annual increase.

Strategic Plan:
Focus Area: Effective Government
Goal 2 – Build & Maintain Relationships to Support Effective & Efficient Government
Objective EG 2.2: Pursue policy, fiscal and legislative options to provide county leaders with the flexibility and tools needed to respond to the challenges associated with a growing community.

Funding Information:
Funding for this contract is included in the Office of Procurement and Contracts operating budget.

Recommendations:
Request the Board approve the annual spend for the remaining term of the contract.

ITEM 7B – APPROVAL OF MULTIPLE CONTRACT SPENDING AMOUNTS

The following request was approved as part of the Consent Agenda:

Flagler County Board of County Commissioners
Consent: BOCC Departments / Agenda Item 7.b.

Meeting Date:	September 2, 2026
Department Contact:	Andrew Ferrara, Contract Compliance Officer, Mike Dickson, General Services Director
Subject:	**Approval of Multiple Contract Spending Amounts.** Request the Board approve the contract spend and approve change orders for the new term of the contracts for American Janitorial Inc., Clean Earth of Alabama, W.W. Gay Mechanical Contractor, and Yellowstone Landscape including the cost for additional services as defined in the not-to-exceed amounts.

Overview/Summary:
The following contracts are eligible for a 2-year renewal under the terms of their original agreements. Each vendor has performed satisfactorily, and the respective departments recommend continuation of services. All vendors are in good standing, and services remain essential to county operations. The contract renewals comply with Procurement policies and procedures.

Vendor	Annual Spend	Annual Not-to-Exceed for Additional Services	Total Annual Contract Spend	Renewal Term	Contract Expiration
American Janitorial Inc	$903,916.68	$45,000	$948,916.68	2 Years	7/15/2028
Clean Earth of Alabama	$65,000.00	$0	$65,000	2 Years	7/24/2028
W.W. Gay Mechanical Contractor	$84,447.00	$10,000	$94,447.00	2 Years	6/30/2028
Yellowstone Landscape	$304,140.16	$10,000	$314,140.16	2 Years	10/3/2028

Strategic Plan:
Focus Area: Effective Government
Goal 2 – Build & Maintain Relationships to Support Effective & Efficient Government
Objective EG 2.2: Pursue policy, fiscal and legislative options to provide county leaders with the flexibility and tools needed to respond to the challenges associated with a growing community.

Funding Information:
Funding is available and budgeted within the respective departmental budgets.

Recommendations:
Request the Board approve the contract spend and approve change orders for the new term of the contracts for American Janitorial Inc., Clean Earth of Alabama, W.W. Gay Mechanical Contractor, and Yellowstone Landscape including the cost for additional services as defined in the not-to-exceed amounts.

ITEM 7C – APPROVAL OF DECLARATION OF ITEMS AS SURPLUS

The following request was approved as part of the Consent Agenda:

Flagler County Board of County Commissioners
Consent: BOCC Departments / Agenda Item 7.c.

Meeting Date: September 2, 2026
Department Contact: Jessica Martin, Procurement Coordinator
Subject: **Approval of Declaration of Items as Surplus.**

Overview/Summary:
Pursuant to the provisions of Chapter 274, Florida Statutes, the Board of County Commissioners must declare items as surplus and authorize the disposal of all tangible personal property, owned by the governmental unit, of a non-consumable nature. The list was sent to the Procurement Manager to create a master list to present to the Board. Items on this list have exceeded their useful life and will be either sold, used as a trade-in, or exchanged under warranty as outlined on the list below:

Log#	Clerk#	FCID#	Aquisition Date	Original Cost	Description	VIN/SERIAL#	Reason for disposal
26-40	5009	966	12/16/2008	$15,281.00	2009 Ford Ranger 4x2	1FTYR14D09PA23861	End of Useful Service Life
26-41	7238	7238	9/30/2017	$ 9,163.54	FR Search and Rescue Equipment for Helicopter	N/A	End of Useful Service Life

Strategic Plan:
Focus Area: Effective Government
Goal 1 – Maintain Financial Stability

Funding Information:
Proceeds generated by the sale of surplus property will be deposited into the fund from which the original purchase was funded.

Recommendations:
Request the Board declare items as surplus, approve the removal of items from the County's fixed asset inventory, and authorize Procurement to dispose of surplus property pursuant to the Fixed Asset Policy.

ITEM 7D – APPROVAL AND AWARD TO DREWRY SITE DEVELOPMENT FOR 26-ITB-017 FIRST AVENUE DRAINAGE PROJECT

The following request was approved as part of the Consent Agenda:

UNOFFICIAL

Flagler County Board of County Commissioners
Consent: BOCC Departments / Agenda Item 7.d.

Meeting Date:	September 2, 2026
Department Contact:	Hamid Tabassian, County Engineer, Jessica Martin, Procurement Coordinator
Subject:	**Approval and Award to Drewry Site Development for 26-ITB-017 First Avenue Drainage Project.**

Overview/Summary:
An Invitation to Bid (ITB) was advertised in the Palm Coast Observer as well as publicly posted on www.flaglercounty.gov through OpenGov at www.procurement.opengov.com as 26-ITB-017 to complete roadway drainage improvements along First Avenue as identified in the project drawings.

The scope of work includes the construction of approximately ±0.243 miles of roadway drainage improvements along First Avenue from Malacompra Road to the northern roadway dead end. The proposed stormwater improvements will generally include the installation of roadside conveyance swales, storm sewer pipe, side drain and cross drain pipes, drainage structures/inlets, and end treatments as part of the base-bid.

On July 29, 2026, the County received ten (10) bid responses to 26-ITB-017 as detailed on the attached tabulation sheet. Staff reviewed the bids for conformity to specifications as well the terms and conditions outlined in the bid documents. Drewry Site Development submitted the lowest responsive and responsible bid for the advertised base-bid and additive bid options in the amount of $576,901.17.

A Work Authorization (WA-3) was developed under the County's Continuing Contract RSQ 24-042 for Professional Construction Engineering and Inspection (CEI) Services for construction support of the project. CONSOR Engineers LLC was selected following County procurement policy to provide the CEI services in the not to exceed amount of $52,070.59.

Staff is seeking approval from the board to approve the recommendation of award of the 26-ITB-017 construction contract to Drewry Site Development and approval of WA-3 for CONSOR Engineers, LLC to provide corresponding CEI services.

Strategic Plan:
Focus Area: Growth and Infrastructure
Goal 1 – Provide quality fundamental infrastructure and assets.
Objective GI 1.1: Ensure public safety through continuous planning for future needs and adequate evacuation capacity.
Objective GI 1.2: Expand and improve infrastructure to support commercial/ industrial and residential growth.
Measure GI 1.2.2: Make surface transportation improvements.

Funding Information:
Funding for stormwater is included in the FY25-26 Adopted budget in the 1/2 Cent Sales Tax Fund 1311 in the amount of $500,000. The balance of $128,972 is available within the Constitutional Gas Tax Fund 1112.

Recommendations:
Request the Board approve: 1) Award ITB No. 26-ITB-017 to Drewry Site Development for the First Avenue Drainage Improvements Project Base Bid in the amount of $576,901.17 and authorize the Chair to execute the contract as approved as to form by the County Attorney; 2) Approve and authorize the execution of Work Authorization No. WA-3 under RSQ 24-042 to CONSOR Engineers, LLC, in not to exceed amount of $52,070.59 for Construction Engineering and Inspection (CEI) services for the First Avenue Drainage Improvements Project as approved to form by the County Attorney; 3) authorize local fund obligation and overall project budget; and 4) authorize the County Administrator to execute any change orders or other project related documents approved as to form by the County Attorney within the overall project budget.

UNOFFICIA

THIS SPACE INTENTIALLY LEFT BLANK

ITEM 7E – APPROVAL OF BUDGET TRANSFER FROM GENERAL FUND (1001) RESERVES TO OFFSET FIRERESCUE SALARY AND OVERTIME EXPENDITURES

The following request was approved as part of the Consent Agenda:

Flagler County Board of County Commissioners
Consent: BOCC Departments / Agenda Item 7.e.

Meeting Date:	September 2, 2026
Department Contact:	Michael Tucker, Fire Rescue Chief
Subject:	**Approval of Budget Transfer from General Fund (1001) Reserves to Offset Fire Rescue Salary and Overtime Expenditures.**

Overview/Summary:
Flagler County Fire Rescue (FCFR) has incurred unavoidable overtime due to the demands of emergency service staffing. Minimum staffing requirements, personal leave, and a limited number of personnel qualified to fill critical operational roles—such as rescue supervisors, drivers, lieutenants—have all contributed to continued overtime use. When staff in these essential positions take leave, properly trained staff must be brought in on overtime to maintain safe and compliant operations. These challenges are common throughout the fire service, making some overtime necessary to maintain full operational readiness.

Another factor affecting the FCFR budget is the timing of the collective bargaining agreement, which was finalized after the budget was set. The agreement included a transition to a 52-hour workweek that began three months earlier than planned. While this early implementation supported long-term staffing goals, it also resulted in an unanticipated increase in salary and overtime costs. FCFR's overtime budget was reduced by $300,000 in FY 2025-26 due to the anticipation of savings associated with the 52-hour workweek, but the early implementation resulted in additional overtime costs. FCFR has now successfully met all operational staffing requirements for the 52-hour schedule.

The transition to the 52-hour week was driven in part by House Bill 929 (2025) which ultimately became state law under Florida Statute 633.508(7). HB 929 was passed by the Florida legislature in an effort to improve firefighter mental health and wellness. Ultimately, this legislation encourages local governments to move toward implementation of a 42-hour workweek for firefighters and paramedics encouraging a reduction in on-the-job injuries, fatalities, and occupational diseases.
FCFR was also requested by the State of Florida to provide mutual aid support for wildfires in Putnam and Clay counties under the State Mutual Aid agreement and has submitted a reimbursement request in the amount of $45,133.

Fire Rescue remains committed to reducing overtime where feasible, without compromising service levels. The department has also canceled planned purchases and reduced operating expenditure to redirect funds toward personnel needs. These efforts will continue throughout the remainder of the fiscal year.

Strategic Plan:
Focus Area: Public Health & Safety

Goal 3 - Improve Public Safety Response and Service Delivery Capabilities.
Objective PHS 3.3: Protect life, property, and the environment from the effects of fire, medical emergencies, disasters, and hazardous materials accidents to current and expanding service delivery areas.

Funding Information:
Budget from Fund 1001 Reserves in the amount of $1,000,000 will be appropriated into Fire Rescue and EMS Personal Services with the approval of the Budget Transfer.

Recommendations:
Request the Board approve the transfer from the General Fund Reserves to support Fire Rescue salary and overtime costs.

UNOFFICIAL

THIS SPACE INTENTIALLY LEFT BLANK

ITEM 7F – APPROVAL OF EXTENSION OF TAX ROLL

The following request was approved as part of the Consent Agenda:

Flagler County Board of County Commissioners
Consent: BOCC Departments / Agenda Item 7.f.

Meeting Date:	September 2, 2026
Department Contact:	Sean Moylan, County Attorney
Subject:	**Approval of Extension of Tax Roll.**

Overview/Summary:
Section 197.233, Florida Statutes, permits the County Commission, upon request by the Tax Collector and by majority vote, to order the tax roll to be extended while the Value Adjustment Board completes its hearings. The Honorable Shelly Edmonson, Flagler County Tax Collector, has made such request. By extending the tax roll, the Property Appraiser and Tax Collector will be able to proceed to mail out tax notices in a timely manner; taxing authorities will be able to collect revenue beginning November 1st; and taxpayers will have the opportunity to pay their taxes during each of the four discount periods allowed by law. The same step has been taken in Flagler County each year since 2006.

Strategic Plan:
Effective Government
EG 2.1: Create a culture of collaboration with municipalities and community partners.

Funding Information:
N/A

Recommendations:
Request the Board adopt the Resolution extending the tax roll and authorize the Tax Collector and Property Appraiser to take all necessary steps to send out tax bills in a timely manner.

ITEM 7G – APPROVAL OF COMMITTEE RE-APPOINTMENT OF STEPHEN CIVITELLI TO THE HEALTH PLANNINGCOUNCIL OF NORTHEAST FLORIDA

The following request was approved as part of the Consent Agenda:

Flagler County Board of County Commissioners
Consent: BOCC Departments / Agenda Item 7.g.

Meeting Date:	September 2, 2026
Department Contact:	Rose Keirnan, Exec. Admin. Asst.
Subject:	**Approval of Committee Re-Appointment of Stephen Civitelli to the Health Planning Council of Northeast Florida**.

Overview/Summary:
The Health Planning Council of Northeast Florida represents Baker, Clay, Duval, Flagler, Nassau, St. Johns, and Volusia counties. In 1982, the Health Planning Council of Northeast Florida (HPCNEF) became one of 11 Local Health Councils mandated by Florida State Statute 408.033 to dedicate resources and expertise to regional health utilization data management, health planning and research, community organizing, health promotion, and awareness programs.

The Health Planning Council is made up of appointees by municipal and county governing boards in Northeast Florida. This position is typically held by a health care professional who is familiar with the many facets of our health care system, WIC, indigent dental and other similar issues.

Strategic Plan:
Focus Area: Effective Government
Goal 2 – Build and Maintain Relationships to Support Effective and Efficient Government.

Funding Information:

Recommendations:
Request the Board approve the re-appointment of Mr. Civitelli, Administrator of the Department of Health in Volusia and Flagler Counties, to a 2-year term on the Health Planning Council of Northeast Florida.

ITEM 7H – APPROVAL OF BUDGET AMENDMENT TO INCREASE THE LINE ITEMS FOR AVIATION OIL & AVGAS AND JET FUEL FOR THE FLAGLER EXECUTIVE AIRPORT ENTERPRISE FUND IN THE AMOUNT OF $379,523 ~~$310,000~~

The following request was approved as part of the Consent Agenda:

Flagler County Board of County Commissioners
Consent: BOCC Departments / Agenda Item 7.h.

Meeting Date:	September 2, 2026
Department Contact:	Roy Sieger, Airport Director
Subject:	**Approval of Budget Amendment to Increase the Line Items for Aviation Oil & AvGas and Jet Fuel for the Flagler Executive Airport Enterprise Fund in the Amount of $379,523 ~~$310,000~~.**

Overview/Summary:
Due to an increase in aviation fuel sales and fuel costs, it is necessary to increase the Airport's budget in order to continue to purchase fuel for resale. Currently, the cost of AvGas is $5.05 per gallon and Jet A fuel is $4.45 per gallon. The requested increase budget amount for expenses and revenues is as follows:

Fuel Type	Gallons	Expense	Revenue
AvGas	36,190	$190,000	$226,188
Jet A	26,667	$120,000	$153,335

Although fuel costs have climbed, our revenue remains consistent, due to the margin of profit we maintain on each gallon sold. The requested budget adjustment will allow us to uphold the financial health of our airport.

Strategic Plan:
Focus Area: Effective Government
Goal 1 - Maintain Financial Stability
Objective EG 1.1.1: Prioritize support and flexibility with budget to successfully navigate unforeseen expenses within a given fiscal year.

Funding Information:
Funding will be appropriated with approval of the Unanticipated Revenue Resolution for the Airport Fund 1401.

Recommendations:
Request the Board approve the Unanticipated Revenue Resolution to increase the Airport budget by $379,523 ~~$310,000~~ and approve staff to make the necessary changes to the purchase order for AvGas and Jet A.

ITEM 7I – APPROVAL TO RESCIND PROPERTY OWNER LETTER OF AUTHORIZATION FOR THE ABANDONMENT OF THE OLD BRICK TOWNSHIP DRI DEVELOPMENT ORDER

The following request was approved as part of the Consent Agenda:

Flagler County Board of County Commissioners
Consent: BOCC Departments / Agenda Item 7.i.

Meeting Date:	September 2, 2026
Department Contact:	Adam Mengel, Acting County Administrator
Subject:	**Approval to Rescind Property Owner Letter of Authorization for the Abandonment of the Old Brick Township DRI Development Order.**

Overview/Summary:
On August 21, 2026, Raydient Palm Coast LLC withdrew its pending applications with the City of Palm Coast. Included with these applications was the termination of the Old Brick Township Development of Regional Impact. The County, through its Environmentally Sensitive Lands (ESL) Program purchase of Parcel B2 and Parcel C in 2025, became a parcel owner subject to the Old Brick Township Development of Regional Impact Development Order. At the time of its purchase, the County agreed to cooperate with any future effort to abandon, rescind, or terminate the Old Brick Township Development of Regional Impact, leading to the County's approval of the Property Owner Letter of Authorization.

Strategic Plan:
Focus Area: Effective Government
Goal 2 – Build and Maintain Relationships to Support Effective and Efficient Government.

Funding Information:

Recommendations:
Request the Board approve the Resolution Rescinding the Property Owner Letter of Authorization.

GENERAL BUSINESS

ITEM 8A

None

PUBLIC HEARINGS

ITEM 9A

None

ITEM 10A - COUNTY ADMINISTRATOR REPORT/COMMENTS

Interim County Administrator Adam Mengel reported the following:

- Previewed the tentative agenda for the September 14, 2026, Workshop: Ormond Beach Conservation Easement Discussion, UF/IFAS Oversight and Extension Services, Charters of Freedom Plaques Status, Flagler Humane Society Discussion, and Household Hazardous Waste Program Update.
- The regular meeting agenda for September 14, 2026, containing upcoming land use public hearings, is scheduled for publication Thursday/Friday ahead of the Labor Day holiday.
- County administrative offices will be closed on Monday, September 7, 2026, in observance of Labor Day

ITEM 10B - COUNTY ATTORNEY REPORT/COMMENTS



County Attorney Michael Rodriguez reported the following:

- Gave an update regarding the City of Bunnell's approval of a special exception for a proposed solid waste/landfill facility. Explained that the City had approved the application as a solid waste treatment facility; however, the application repeatedly identifies the proposed use as a Class I landfill. Advised that the County's potential avenue for action would be based on an inconsistency with the County's Comprehensive Plan. Explained that a Comprehensive Plan challenge could involve the Florida Governmental Conflict Resolution Act (Chapter 164, F.S.) process and, if necessary, litigation. Requested direction from the Board to research the matter and return with available options.

Acting Chair Carney asked whether the decision required approval by the Bunnell City Commission.

Mr. Rodriguez stated that, because the matter was approved as a special exception, the City's Planning, Zoning and Appeals Board had final authority. Further explained that the City's code separately addresses landfills and solid waste management facilities. Landfills are not identified as a use in the AG/S district, and ACI zoning requires City Commission approval at a public hearing. Stated that a direct challenge to the City's zoning interpretation would more appropriately be brought by an affected Bunnell resident, while the County could evaluate potential Comprehensive Plan or intergovernmental issues.

Commissioner Dance stated that the City's code distinguishes between landfills and solid waste management facilities and expressed concern that the City was treating the proposed landfill as a solid waste management facility. Raised concerns regarding notification of County residents within 300 feet and referenced County Ordinance 2024-09 concerning solid waste and landfill coordination. Recommended that the County continue evaluating whether the approval is inconsistent with the County's Comprehensive Plan.

County Attorney Rodriguez stated that a Comprehensive Plan challenge would be separate from an appeal of the City's decision. Advised that the County could potentially pursue an intergovernmental challenge if the matter implicates an applicable interlocal agreement, coordination requirement, or Comprehensive Plan provision. Noted that Chapter 164 would require formal intergovernmental discussions before litigation.

(Item 10b – Continued)

Commissioner Dance expressed concern regarding the lack of recorded proceedings by the City and noted that the 30-day appeal period for affected residents remained open. Asked whether Board direction was needed.

Mr. Rodriguez requested consensus to proceed with additional legal research and preparation.

There was BOCC consensus to authorize the County Attorney's Office to research the legal and Comprehensive Plan issues associated with the City of Bunnell's special-exception approval and return with a report of options at the next regular meeting.

Mr. Rodriguez provided an update regarding the Florida Action Committee statewide lawsuit challenging county sexual-offender registry ordinances. Reported that Flagler County had filed a notice of appearance. The County's insurance carrier subsequently assigned defense counsel from Roper, Townsend, & Sutphen P.A., which is representing multiple Florida counties in the consolidated litigation. Stated that all defense fees are covered under the County's insurance.

ITEM 10C – COMMUNITY OUTREACH

Acting Chair Carney opened public comment. Seeing no speakers, public comment was closed.

ITEM 10D – COMMISSION REPORTS/COMMENTS/ACTION

Commissioner Dance presented five proposed policy initiatives for the Florida Association of Counties (FAC) 2027 Legislative Policy Platform:

- Ava and Karma's Law prohibiting housing live animals in self-storage facilities
- Sex offender and predator address verification requiring explicit written consent from property owners
- High Tourism Impact Tourist Development Tax (TDT) expansion for coastal and navigable waterway counties
- Senate Bill 180 fix resubmission
- Beach nourishment and shoreline protection easement statutory clarification. Board and County Attorney discussion occurred

There was BOCC consensus to approve and submit all five policy proposals to the Florida Association of Counties.

Commissioner Dance commented on the following:

- Reported a site visit to the David I. Siegel Center storage facility to evaluate potential space for the Bike Man of Flagler County. Noted current building utilization for Meals on Wheels and dry goods distribution, suggesting potential on-site storage container options or exploring a multi-agency senior services hub model in the vacant Health and Human Services space.

(Item 10d – Continued)

- Acknowledged correspondence from Vincent's Clubhouse regarding transportation services.
- Congratulated Flagler County Fire Rescue Chief Tucker on his election as First Vice President of the Florida Fire Chiefs' Association.

Commissioner Hansen reported on attending and speaking at the Hammock Community Association meeting alongside Mr. Mengel and Mr. Tabassian, presenting updates to approximately 120 residents.

Commissioner Richardson reported on serving on the Flagler County Canvassing Board throughout August. Noted a brief statewide software reporting glitch in Congressional District 6 primary tallies that was promptly identified and corrected.

Acting Chair Carney expressed concerns regarding animal control services and Flagler Humane Society shelter operations. Asked if the topic will be discussed September 14th.

Mr. Mengel stated the Flagler Humane Society discussion will be on the September 14th Workshop, and their annual contract will be considered at the Regular Meeting.

There was continued BOCC discussion on animal control and the Flagler Humane Society contract. BOCC direction was given to administration and legal staff to provide operational and contractual options at the September 14th workshop.

A motion was made by Commissioner Hansen to restore the Clerk of Court's FY 2026-27 budget to its original submission.

Motion died due to lack of a second.

Commissioner Dance noted the budget modification was originally made by consensus.

Mr. Rodriguez agreed and explained there is no formal declaration to rescind.

There was continued BOCC discussion with Commissioner Hansen and Commissioner Dance speaking in support of restoring the budget allocation, and Commissioner Richardson and Acting Chair Carney speaking in opposition. **Discussion resulted in no BOCC consensus to restore the Clerk of Court's budget allocation.**

ADJOURNMENT

The meeting was adjourned by consensus at 11:28 a.m.

APPROVED AND ADOPTED _____

ATTEST:

FLAGLER COUNTY BOARD OF
COUNTY COMMISSIONERS

_____
Tom Bexley
Clerk of the Circuit Court & Comptroller

_____
Leann Pennington
Chair

UNOFFICIAL

FLAGLER COUNTY BOARD OF COUNTY COMMISSIONERS

SEPTEMBER 3, 2026

SPECIAL MEETING

Present: Chair Leann Pennington, Vice Chair Kim Carney, Commissioners Andrew Dance, Gregory Hansen, Pam Richardson, Interim County Administrator Adam Mengel, County Attorney Michael Rodriguez and Deputy Clerk Stephanie Tolson

ITEM 1 - CALL TO ORDER

Chair Pennington called the meeting to order at 5:01 p.m. in the Board Chambers of the Government Services Building in Bunnell, Florida.

ITEM 2 - PLEDGE TO THE FLAG AND MOMENT OF SILENCE

Chair Pennington led the Pledge to the Flag and requested a moment of silence.

ITEM 3 – FIRST BUDGET PUBLIC HEARING

a) **Open Public Hearing**
b) **Adopt Special Assessment Rolls for FY 2026-27**

UNOFFICIAL

Flagler County Board of County Commissioners
First Budget Public Hearing (5:01 p.m. time certain) / Agenda Item 3.b.

Meeting Date: September 3, 2026
Department Contact: Brian Eichinger, OMB Manager
Subject: **Adopt Special Assessment Rolls for FY 2026-27**

Overview/Summary:
Beginning in 1991, the Board of County Commissioners has levied a number of non-ad valorem assessments for a variety of services. The public hearing being held today is for the purpose of approving the assessment rates and assessment rolls for fiscal year 2026-27. The assessments to be considered as a part of this public hearing are as follows:

On February 28, 2002, the Board of County Commissioners approved the creation of the Espanola Special Assessment District for the purpose of providing mosquito control services. The proposed fiscal year 2026-27 assessment rate of $11.76 per special assessment unit has remained constant.

On February 28, 2002, the Board of County Commissioners approved the creation of Rima Ridge Special Assessment District for the purpose of providing mosquito control services. The proposed fiscal year 2026-27 assessment rate of $14.62 per special assessment unit has remained constant.

The Flagler County Mandatory Solid Waste Collection and Disposal Special Assessment District was created pursuant to the provisions of Flagler County Ordinance Number 07-08, dated July 9, 2007. The stated purpose of this district "is to assure that all solid waste generated and accumulated within Flagler County shall be collected, removed and disposed of by an authorized collector, except as otherwise provided herein, in a proper, sanitary and efficient manner, to eliminate illegal dumping within the county, to provide an effective method of collecting the special assessment charges provided herein, and to promote the general health, safety and welfare of the citizens of Flagler County, Florida". Special assessments were imposed against benefitted properties in this district for the first time in fiscal year 2007-08. The special assessment in fiscal year 2026-27 is $445.20.

On September 12, 2016, the Board of County Commissioners established the North Malacompra Drainage Basin District and the Marineland Acres Drainage Basin District for improvements and maintenance of a stormwater master plan and drainage system to mitigate flooding and pollution from the basin area. Since FY 2016-17, the initial rates for the North Malacompra District were $30/lot and remain the same for FY 2026-27. Since FY 2016-2017, the initial rates for the Marineland Acres District were $435/lot for developed property and $220/lot for undeveloped property. The rates for fiscal year 2026-27 are $80/lot for both developed and undeveloped properties.

On December 20, 2017, the Board of County Commissioners established the Painters

UNC

(Item 3b continued)

Hill Seawall Special Assessment District that will allow the County to construct a seawall that will run 21 consecutive lots (2 of which have existing seawalls and will not be assessed). The seawall will serve a paramount public purpose in protecting homes and State Road A1A in Painters Hill, as well as the beach itself from the risk of collapsing homes. The rate for fiscal year 2026-27 is $116.28 per lineal front foot.

Focus Area: Effective Government
Goal 1 – Maintain Financial Stability

Funding Information:
Special Assessment Revenues generated from the non-ad valorem assessments contemplated in the attached Resolution have been included within the appropriate funds in the proposed fiscal year 2026-27 budget, to be approved on September 14, 2026, final public hearing to adopt the budget.

Recommendations:
Staff recommends the Board approve the FY 2026-27 Special Assessment Rolls as presented.

A motion was made by Commissioner Hansen to adopt the Resolution Approving the Assessment Rolls and Levying the Non-Ad Valorem Assessments as presented and included in the record and authorize staff to complete the DR-408A Certificate to Non-Ad Valorem Assessment Roll Form. Seconded by Commissioner Hansen.

Chair Pennington called the question. Motion carried unanimously.

Chair Pennington opened public comment.

There was none.

Chair Pennington closed public comment.

UNOFFICIAL

c) Adopt the FY 2027-2031 Five-Year Capital Improvement Program

Flagler County Board of County Commissioners
First Budget Public Hearing (5:01 p.m. time certain) / Agenda Item 3.c.

Meeting Date:	September 3, 2026
Department Contact:	Brian Eichinger, OMB Manager
Subject:	**Adopt the FY 2027-2031 Five-Year Capital Improvement Program**

Overview/Summary:
On September 21, 2020, the Board adopted resolution 2020-64 enacting the Capital Improvement Program Policy that took effect on October 1, 2020. The purpose of the CIP is to compile an accurate, comprehensive, and timely Capital Improvement Program (CIP). To provide guidelines and set processes and procedures for the efficient operation and management of the Flagler County Capital Improvement Program, to establish an annual capital improvement review process. To provide a central point of communication and organization in the development and review of the CIP and ensure that issues and decisions related to the CIP undergo effective and appropriate internal processing along with bringing forth issues and decisions through the County's approval and information process (the CIP Team, County Administrator, Board of County Commissioners, et cetera).

Strategic Plan:
Focus Area: Growth and Infrastructure
Goal 1 – Provide Quality Fundamental Infrastructure and Assets

Funding Information:
The CIP Team prioritized the known projects. Funding has been appropriated in the FY 2026-27 budget for projects in the first year of the CIP. Year 2 is financially feasible and years 3-5 are prioritized for planning purposes.

Recommendations:
Staff recommends the Board approve the FY 2027-2031 Five-Year Capital Improvement Program.

A motion was made by Commissioner Hansen to adopt the FY 2027-2031 Five-Year Capital Improvement Program. Seconded by Commissioner Richardson.

Chair Pennington opened public comment.

There was none.

Chair Pennington closed public comment.

d) Adopt the FY 2026-27 Tentative Millage Rates and Tentative Budget

Flagler County Board of County Commissioners
First Budget Public Hearing (5:01 p.m. time certain) / Agenda Item 3.d.

Meeting Date:	September 3, 2026
Department Contact:	Brian Eichinger, OMB Manager
Subject:	**Adopt the FY 2026-27 Tentative Millage Rates and Tentative Budget** The procedures to be followed at the public hearing, as set forth in Section 200.065, Florida Statutes, are:

Overview/Summary:
The attached Schedule A lists all changes by fund that have been made to the tentative budget document submitted to the Board of County Commissioners on July 13, 2026. The items changed include items that have arisen since the submission of the FY 2026-27 Tentative Budget document.

In 1980, the Florida Legislature adopted what is known as the Truth-in-Millage Legislation also known as TRIM. The goal of the legislation is to ensure that taxpayers are advised of the public hearings at which the local taxing authorities' budgets and millage rates are considered and adopted. Each year, the Property Appraiser completes an assessment of the value of all property and certifies to each taxing authority the taxable value of the property within its jurisdiction. Each taxing authority then notifies the Property Appraiser of its proposed millage rate, its rolled back rate and the date, time and place of the public hearing to consider the proposed millage rate and the tentative budget. Once the Property Appraiser receives the information, he sends a notice that includes all the referenced information by first class mail to every taxpayer on the assessment role. The notice sent to taxpayers is called the TRIM notice. The TRIM notice lists what the taxes were for the prior year, what the taxes will be if the proposed budget changes are made, and what the taxes will be if no budget changes are made. This information is listed for each taxing authority. The notice also lists all voted levies for debt service. The purpose of the TRIM notice is to provide taxpayers with sufficient basic information to enable them to participate in the public hearing process.

Strategic Plan:
Focus Area: Effective Government
Goal 1 – Maintain Financial Stability

Funding Information:
Please see the Schedule A attached to Budget Resolution.

Recommendations:
Staff recommends the Board adopt the Tentative Millage Rates, approve the attached Resolution incorporating all changes made to date to the fiscal year 2026-27 budget totaling an overall decrease of $540,931 and adopt the Tentative Fiscal Year 2026-27 Budget that will now total $333,288,593.

Brian Eichinger, Financial Services read from a script regarding procedures required by Florida Statute.

Chair Pennington asked the BOCC if they have any questions.

(Item 3d continued)

Commissioner Carney asked for the Schedule A to be placed on the screen. Asked about the partial year for the adult day care.

Mr. Eichinger answered they put three months.

Commissioner Carney clarified that there isn't enough money to get anyone started on an adult day care.

Mr. Eichinger answered that is correct.

Chair Pennington opened public comment.

There was none.

Chair Pennington closed public comment.

A motion was made by Commissioner Hansen to approve Resolution Number 2026-49 adopting the tentative millage rates for the fiscal year ending September 30, 2027. Seconded by Commissioner Richardson.

Chair Pennington opened public comment.

There was none.

Chair Pennington closed public comment.

Chair Pennington called the question. Motion carried unanimously.

A motion was made by Commissioner Hansen to approve Resolution Number 2026-50 adopting the changed revenue estimates and the Amended Tentative Budget for the fiscal year ending September 30, 2027. Seconded by Commissioner Richardson.

Chair Pennington opened public comment.

There was none.

Chair Pennington closed public comment.

UNOFFICIAL

(Item 3d continued)

Chair Pennington called the question. Motion carried unanimously.

A motion was made by Commissioner Hansen to schedule the second and final public hearing to adopt the final FY27 millage rates and budget for Monday, September 14, 2026, at 5:01 P.M. in the Boards Chambers, 1769 E. Moody Blvd, Building 2, Bunnell, FL 32110. Seconded by Commissioner Richardson.

Chair Pennington opened public comment.

There was none.

Chair Pennington closed public comment.

Chair Pennington called the question. Motion carried unanimously.

A motion was made by Commissioner Hansen to adjourn the Public Hearing portion of the meeting. Seconded by Commissioner Richardson.

ITEM 4 – COUNTY ADMINISTRATOR CANDIDATE PRESENTATIONS

Commissioner Pennington gave a brief overview of the item.

Tracy Miller, Candidate for County Administrator gave a presentation.
(Presentation on file with the Clerk's office.)

Commissioner Dance asked where Ms. Miller saw the flaws in our current strategic plan and what she would want to create a new path.

Ms. Miller answered we could improve the mission and vision. Added it gets down to the fact that we want to create a good quality of life for the residents, but it doesn't say it plainly. Stated the way it is organized makes it hard to align to action.

Commissioner Carney asked how Ms. Miller develops staff.

Ms. Miller answered she likes to use process improvement stretch assignments

Commissioner Hansen asked how she would get her ideas transferred to the Directors.

UNOFFICIAL

(Item 4 continued)

Ms. Miller answered she is a collaborative leader. Added she is all for bringing ideas to the table but then allowing others to have a voice in how things proceed.

Commissioner Richardson thanked Ms. Miller for coming and for the presentation.

Chair Pennington asked how she would bring the five BOCC members that may have differences of opinion together for a consensus.

Ms. Miller answered in part that is not her job. Stated that is the BOCC responsibility to come to consensus, but it is her job to equip the board with the right information so that they can come to that consensus.

Richard Reade, Candidate for County Administrator gave a presentation.
(Presentation on file with the Clerk's office.)

Commissioner Dance asked for Mr. Reade to explain his vision for economic development and how we can get some wins.

Mr. Reade answered he would need to get an understanding of the zoning and what the different commercial opportunities there are. Added he would also like to see what the marketing strategy is for the community.

Commissioner Carney asked how Mr. Reade develops staff.

Mr. Reade answered it's being honest, listening, and learning.

Commissioner Richardson asked Mr. Reade his thoughts on animal control.

Mr. Reade answered in Okeechobee the sheriff took over animal control. Added if the sheriff would not have done so, they would have looked at what it would take to take it over or what opportunities are there for a good partnership.

Aaron Van Kleeck, Candidate for County Administrator gave a presentation.
(Presentation on file with the Clerk's office.)

Commissioner Dance asked Mr. Van Kleeck to share how he assumed the director position of emergency services without any knowledge of emergency services.

UNOFFICIAL

(Item 4 continued)

Mr. Van Kleeck shared he was new to emergency services so he took the time to go out and ride with ambulance crews for the full shift and go into the fire houses for a full shift to see what the men and women are dealing with on a daily basis so he could learn about their operation from the ground up. Stated he did this so that the decisions he was going to be making as director were taking into consideration what the men and women are dealing with in the field.

Commissioner Carney asked how Mr. Van Kleeck develops staff.

Mr. Van Kleeck answered everyone is different so everyone would have to be approached differently whether they are audible learner, hands-on learner, or a visual learner.

Commissioner Hansen asked how as the administrator he would keep from being too hands-on.

Mr. Van Kleeck answered trust. Stated building trust, holding them accountable, and offering support where needed.

Commissioner Richardson asked if Mr. Van Kleeck has handled anything with animal control in Volusia County.

Mr. Van Kleeck answered not directly, he was already in emergency services when they animal control piece was brought up.

Chair Pennington asked what type of funding sources Mr. Van Kleeck has experience with outside of Ad Valorem.

Mr. Van Kleeck answered almost every tax from Ad Valorem to Non-Ad Valorem. Added MSBU's and MSD's which is essentially an MSTU. Stated he's also familiar with state revenue sharing, sales tax, utility tax, communications tax, and more.

Chair Pennington opened public comment.

David Eckert, Flagler County resident shared he can provide his notes on each candidate via email to the BOCC.

Allison Nobles, Flagler County resident shared she believes each candidate did a fantastic job and it's a great thing for the candidates to keep good coordination between the cities and the county.

UNOFFICIAL

ITEM 5 – ADJOURNMENT

The meeting was adjourned by consensus at 6:50 p.m.

APPROVED AND ADOPTED _____

ATTEST:

FLAGLER COUNTY BOARD OF
COUNTY COMMISSIONERS

_____
Tom Bexley
Clerk of the Circuit Court & Comptroller

_____
Leann Pennington
Chair

UNOFFICIAL

Flagler County Board of County Commissioners
Consent: BOCC Departments / Agenda Item 7.a.

Meeting Date: October 5, 2026
Department Contact: Jonathan Lord, Emergency Management Director
Subject: **Ratification and Approval of Proclamations Extending the Local State of Emergency Due to Severe Coastal Erosion and Vulnerability**.

Overview/Summary:
Flagler County has been under a declared state of local emergency due to Hurricane Matthew since October 4, 2016. During that time, other storms have struck the County exacerbating the damage to the dune system and compounding the exposure of public and private property on the barrier island to future storms and flooding. The County also declared local states of emergency for Hurricane Irma (2017), Hurricane Dorian (2019), Hurricane Isaias (2020), and Hurricanes Ian and Nicole (2022).

Due to the cumulative effect of the storms as well as tidal events, Nor'easters, and erosion, Flagler County continues to be in the most precarious position relative to ocean flooding and storms in its history. Although the County has completed a series of emergency protective berm projects since Hurricane Matthew, public and private property on the barrier island remain vulnerable to catastrophic storm damage without further and sustained protective efforts.

As part of addressing the emergency, the Board adopted a long-term beach management plan assisted by an independent coastal engineer, the County's engineering staff and with input from residents and local HOAs. Continuing the state of local emergency will help the County with its ongoing and future efforts and allow the County to take any necessary emergency measures, including expedited emergency procurement and the issuance of emergency administrative orders, as necessary.

Strategic Plan:
Public Safety & Health
Goal 3 – Improve Public Safety Response and Service Delivery Capabilities

Funding Information:
Funding in accordance with grant agreements with the Army Corps of Engineers, FEMA, FDOT and DEP.

Recommendations:
Staff recommends that the Board ratify the Proclamations Extending the Local State of Emergency for Hurricanes Matthew, Ian and Nicole.

Attachments:

1. 2026 09 21 Emergency Proclamation - Extending LSE - Hurricane Matthew, Ian & Nicole
2. 2026 09 28 Emergency Proclamation - Extending LSE - Hurricane Matthew, Ian & Nicole
3. 2026 10 05 Emergency Proclamation - Extending LSE - Hurricane Matthew, Ian & Nicole

FLAGLER COUNTY, FLORIDA
PROCLAMATION EXTENDING
STATE OF LOCAL EMERGENCY
(Hurricanes Matthew, Ian and Nicole)

September 21, 2026

WHEREAS, Flagler County has been under a continuing State of Local Emergency since October 2016 due to Hurricane Matthew and thereafter with Hurricane Irma (2017), Hurricane Dorian (2019), Hurricane Isaias (2020), and with Hurricanes Ian and Nicole (2022), with the state of emergency proclamation being extended in accordance with Florida Chapter 252 and Flagler County Code of Ordinances Section 12-34; and

WHEREAS, these storms have severely damaged the entire dune system of the County, flooding hundreds of homes through dune breaches and over wash, and damaging public infrastructure and other public and private property along the coastline; and

WHEREAS, the damage from these hurricanes has been compounded by intervening Nor'easters and other tidal events, most recently 2024's Hurricane Milton, which further eroded the beach, leaving public and private property at critical risk of further damage; and

WHEREAS, due to the prolonged and continuing vulnerability of the shoreline and the risk of property loss since Hurricane Matthew, the Board of County Commissioners by unanimous vote has ratified each of the Proclamations Extending the State of Local Emergency from October 2016 to and including this date; and

WHEREAS, the prior Proclamations detail the progressive damage to the shoreline of Flagler County since Hurricane Matthew, and the present situation remains precarious; and

WHEREAS, the Board of County Commissioners has authorized repair and recovery efforts based on projects funded and secured through a variety of sources since Hurricane Matthew, and such efforts are likewise detailed in the prior Proclamations; and

WHEREAS, the County Commission has completed a project installing emergency sand in the northern part of the county shoreline using FEMA and FDEP funding to mitigate against any further losses that may occur during upcoming storm seasons; and

WHEREAS, the Army Corps of Engineers has completed the initial installment of the Flagler County Coastal Storm Risk Management Project ("CSRM Project"), a beach renourishment project stretching from the northern boundary of Gamble Rogers State Park to North 7th Street in the City of Flagler Beach, in collaboration with the City, the Army Corps of Engineers, the FDOT, the FDEP, and other stakeholders; and

WHEREAS, the County Commission is identifying funding sources and is working with coastal municipalities, state and federal agencies, and community stakeholders to implement the County's beach management plan, beginning with the portion immediately north of the CSRM Project, but with the goal of eventually renourishing the entire 18-mile coastline of Flagler County; and

WHEREAS, through the adoption of "customary use" ordinances in accordance with Florida law, Flagler County and its coastal municipalities have guaranteed the right of the general public to access and use the entire 18-mile dry sand beach of the Flagler County coastline, including privately owned portions of the beach; and

WHEREAS, the County Commission has enacted other regulatory ordinances to enhance the safety and enjoyment of visitors to the County's beaches including the prohibition of driving on the beach, the prohibition of the removal of coquina from the beach, the protection of nesting sea turtles, the prohibition on bonfires during sea turtle nesting season, the prohibition of cigarette smoking and non-sanctioned camping in County-owned beach parks, and the permitting of beach horseback riding; and

WHEREAS, the County Commission, pursuant to the ongoing state of local emergency, previously adopted emergency administrative order 2018-03, and recently adopted 2024-01, prohibiting persons from traversing the dunes of Flagler County except in designated access points to protect dune vegetation and prevent erosion; and

WHEREAS, the protection of the public's customary use of the beach and the other regulatory measures of the County to protect the safety and enjoyment of visitors to the beach validates the expenditures of public funds to renourish the beach, including privately owned portions thereof, and assists the County in applying for and securing outside agency funding for beach renourishment; and

WHEREAS, the County Commission is entering into agreements with landowners to access and renourish privately owned portions of the Flagler County's beaches and is evaluating the purchase of certain beachfront lands in the northern portion of Flagler County, all with the goal of mitigating losses from future storm events; and

WHEREAS, there is a necessity for the County to remain under a local state of emergency to facilitate these projects all along the shoreline of the County, including the authority to undertake emergency procurement and other actions to protect public and private property; and

WHEREAS, neighborhoods and businesses along the shoreline are presently exposed to the ocean without adequate protection from natural dune structures; and

WHEREAS, taking stock of the losses sustained by the County to date, using analysis of independent coastal engineers, the County has estimated the aggregate present damage to the Flagler beaches to be $150 Million; and

WHEREAS, the vulnerability of the beaches is such that even weather events with heightened tides, not even classed as storm events, can take their toll on the beaches,

leading to further scarping and dune berm collapses and resulting damage to public and private property and infrastructure; and

WHEREAS, extending the local emergency declaration facilitates the County's ability to continue to respond to emergency conditions along the beaches and within lands containing public and private property and infrastructure, all with the goal of mitigating future losses.

NOW THEREFORE, in accordance with the emergency power vested in the County pursuant to Chapter 252, Florida Statutes, and Section 12-34 of the Flagler County Code of Ordinances, Flagler County hereby proclaims that:

1. The states of local emergency initially declared on October 4, 2016 (Hurricane Matthew), and expanded on September 26, 2022 (Hurricane Ian) and again on November 8, 2022 (Hurricane Nicole), all extended by emergency proclamations thereafter in accordance with Section 252.38(3), Florida Statutes, and duly ratified by the Board of County Commissioners, are hereby extended for an additional 7 days from the effective date of this Proclamation, unless terminated or modified earlier or extended in accordance with law.

2. All emergency powers authorized by the foregoing Proclamations declaring a state of local emergency, and extended every seventh day thereafter, are hereby retained and continued for the duration of this Proclamation.

DONE AND ORDERED in Flagler County, Florida, this 21st day of September 2026.

FLAGLER COUNTY BOARD OF COUNTY COMMISSIONERS

Leann Pennington, Chair

CONCURRENCE:

Adam Mengel
Interim County Administrator

Jonathan Lord
Emergency Management Director

APPROVED AS TO FORM:

Sean S. Moylan
Deputy County Attorney

FLAGLER COUNTY, FLORIDA
PROCLAMATION EXTENDING
STATE OF LOCAL EMERGENCY
(Hurricanes Matthew, Ian and Nicole)

September 28, 2026

WHEREAS, Flagler County has been under a continuing State of Local Emergency since October 2016 due to Hurricane Matthew and thereafter with Hurricane Irma (2017), Hurricane Dorian (2019), Hurricane Isaias (2020), and with Hurricanes Ian and Nicole (2022), with the state of emergency proclamation being extended in accordance with Florida Chapter 252 and Flagler County Code of Ordinances Section 12-34; and

WHEREAS, these storms have severely damaged the entire dune system of the County, flooding hundreds of homes through dune breaches and over wash, and damaging public infrastructure and other public and private property along the coastline; and

WHEREAS, the damage from these hurricanes has been compounded by intervening Nor'easters and other tidal events, most recently 2024's Hurricane Milton, which further eroded the beach, leaving public and private property at critical risk of further damage; and

WHEREAS, due to the prolonged and continuing vulnerability of the shoreline and the risk of property loss since Hurricane Matthew, the Board of County Commissioners by unanimous vote has ratified each of the Proclamations Extending the State of Local Emergency from October 2016 to and including this date; and

WHEREAS, the prior Proclamations detail the progressive damage to the shoreline of Flagler County since Hurricane Matthew, and the present situation remains precarious; and

WHEREAS, the Board of County Commissioners has authorized repair and recovery efforts based on projects funded and secured through a variety of sources since Hurricane Matthew, and such efforts are likewise detailed in the prior Proclamations; and

WHEREAS, the County Commission has completed a project installing emergency sand in the northern part of the county shoreline using FEMA and FDEP funding to mitigate against any further losses that may occur during upcoming storm seasons; and

WHEREAS, the Army Corps of Engineers has completed the initial installment of the Flagler County Coastal Storm Risk Management Project ("CSRM Project"), a beach renourishment project stretching from the northern boundary of Gamble Rogers State Park to North 7th Street in the City of Flagler Beach, in collaboration with the City, the Army Corps of Engineers, the FDOT, the FDEP, and other stakeholders; and

WHEREAS, the County Commission is identifying funding sources and is working with coastal municipalities, state and federal agencies, and community stakeholders to implement the County's beach management plan, beginning with the portion immediately north of the CSRM Project, but with the goal of eventually renourishing the entire 18-mile coastline of Flagler County; and

WHEREAS, through the adoption of "customary use" ordinances in accordance with Florida law, Flagler County and its coastal municipalities have guaranteed the right of the general public to access and use the entire 18-mile dry sand beach of the Flagler County coastline, including privately owned portions of the beach; and

WHEREAS, the County Commission has enacted other regulatory ordinances to enhance the safety and enjoyment of visitors to the County's beaches including the prohibition of driving on the beach, the prohibition of the removal of coquina from the beach, the protection of nesting sea turtles, the prohibition on bonfires during sea turtle nesting season, the prohibition of cigarette smoking and non-sanctioned camping in County-owned beach parks, and the permitting of beach horseback riding; and

WHEREAS, the County Commission, pursuant to the ongoing state of local emergency, previously adopted emergency administrative order 2018-03, and recently adopted 2024-01, prohibiting persons from traversing the dunes of Flagler County except in designated access points to protect dune vegetation and prevent erosion; and

WHEREAS, the protection of the public's customary use of the beach and the other regulatory measures of the County to protect the safety and enjoyment of visitors to the beach validates the expenditures of public funds to renourish the beach, including privately owned portions thereof, and assists the County in applying for and securing outside agency funding for beach renourishment; and

WHEREAS, the County Commission is entering into agreements with landowners to access and renourish privately owned portions of the Flagler County's beaches and is evaluating the purchase of certain beachfront lands in the northern portion of Flagler County, all with the goal of mitigating losses from future storm events; and

WHEREAS, there is a necessity for the County to remain under a local state of emergency to facilitate these projects all along the shoreline of the County, including the authority to undertake emergency procurement and other actions to protect public and private property; and

WHEREAS, neighborhoods and businesses along the shoreline are presently exposed to the ocean without adequate protection from natural dune structures; and

WHEREAS, taking stock of the losses sustained by the County to date, using analysis of independent coastal engineers, the County has estimated the aggregate present damage to the Flagler beaches to be $150 Million; and

WHEREAS, the vulnerability of the beaches is such that even weather events with heightened tides, not even classed as storm events, can take their toll on the beaches,

leading to further scarping and dune berm collapses and resulting damage to public and private property and infrastructure; and

WHEREAS, extending the local emergency declaration facilitates the County's ability to continue to respond to emergency conditions along the beaches and within lands containing public and private property and infrastructure, all with the goal of mitigating future losses.

NOW THEREFORE, in accordance with the emergency power vested in the County pursuant to Chapter 252, Florida Statutes, and Section 12-34 of the Flagler County Code of Ordinances, Flagler County hereby proclaims that:

1. The states of local emergency initially declared on October 4, 2016 (Hurricane Matthew), and expanded on September 26, 2022 (Hurricane Ian) and again on November 8, 2022 (Hurricane Nicole), all extended by emergency proclamations thereafter in accordance with Section 252.38(3), Florida Statutes, and duly ratified by the Board of County Commissioners, are hereby extended for an additional 7 days from the effective date of this Proclamation, unless terminated or modified earlier or extended in accordance with law.

2. All emergency powers authorized by the foregoing Proclamations declaring a state of local emergency, and extended every seventh day thereafter, are hereby retained and continued for the duration of this Proclamation.

DONE AND ORDERED in Flagler County, Florida, this 28th day of September 2026.

FLAGLER COUNTY BOARD OF COUNTY COMMISSIONERS

Leann Pennington, Chair

CONCURRENCE:

Adam Mengel
Interim County Administrator

Jonathan Lord
Emergency Management Director

APPROVED AS TO FORM:

Sean S. Moylan
Deputy County Attorney

FLAGLER COUNTY, FLORIDA
PROCLAMATION EXTENDING
STATE OF LOCAL EMERGENCY
(Hurricanes Matthew, Ian and Nicole)

October 5, 2026

WHEREAS, Flagler County has been under a continuing State of Local Emergency since October 2016 due to Hurricane Matthew and thereafter with Hurricane Irma (2017), Hurricane Dorian (2019), Hurricane Isaias (2020), and with Hurricanes Ian and Nicole (2022), with the state of emergency proclamation being extended in accordance with Florida Chapter 252 and Flagler County Code of Ordinances Section 12-34; and

WHEREAS, these storms have severely damaged the entire dune system of the County, flooding hundreds of homes through dune breaches and over wash, and damaging public infrastructure and other public and private property along the coastline; and

WHEREAS, the damage from these hurricanes has been compounded by intervening Nor'easters and other tidal events, most recently 2024's Hurricane Milton, which further eroded the beach, leaving public and private property at critical risk of further damage; and

WHEREAS, due to the prolonged and continuing vulnerability of the shoreline and the risk of property loss since Hurricane Matthew, the Board of County Commissioners by unanimous vote has ratified each of the Proclamations Extending the State of Local Emergency from October 2016 to and including this date; and

WHEREAS, the prior Proclamations detail the progressive damage to the shoreline of Flagler County since Hurricane Matthew, and the present situation remains precarious; and

WHEREAS, the Board of County Commissioners has authorized repair and recovery efforts based on projects funded and secured through a variety of sources since Hurricane Matthew, and such efforts are likewise detailed in the prior Proclamations; and

WHEREAS, the County Commission has completed a project installing emergency sand in the northern part of the county shoreline using FEMA and FDEP funding to mitigate against any further losses that may occur during upcoming storm seasons; and

WHEREAS, the Army Corps of Engineers has completed the initial installment of the Flagler County Coastal Storm Risk Management Project ("CSRM Project"), a beach renourishment project stretching from the northern boundary of Gamble Rogers State Park to North 7th Street in the City of Flagler Beach, in collaboration with the City, the Army Corps of Engineers, the FDOT, the FDEP, and other stakeholders; and

WHEREAS, the County Commission is identifying funding sources and is working with coastal municipalities, state and federal agencies, and community stakeholders to implement the County's beach management plan, beginning with the portion immediately north of the CSRM Project, but with the goal of eventually renourishing the entire 18-mile coastline of Flagler County; and

WHEREAS, through the adoption of "customary use" ordinances in accordance with Florida law, Flagler County and its coastal municipalities have guaranteed the right of the general public to access and use the entire 18-mile dry sand beach of the Flagler County coastline, including privately owned portions of the beach; and

WHEREAS, the County Commission has enacted other regulatory ordinances to enhance the safety and enjoyment of visitors to the County's beaches including the prohibition of driving on the beach, the prohibition of the removal of coquina from the beach, the protection of nesting sea turtles, the prohibition on bonfires during sea turtle nesting season, the prohibition of cigarette smoking and non-sanctioned camping in County-owned beach parks, and the permitting of beach horseback riding; and

WHEREAS, the County Commission, pursuant to the ongoing state of local emergency, previously adopted emergency administrative order 2018-03, and recently adopted 2024-01, prohibiting persons from traversing the dunes of Flagler County except in designated access points to protect dune vegetation and prevent erosion; and

WHEREAS, the protection of the public's customary use of the beach and the other regulatory measures of the County to protect the safety and enjoyment of visitors to the beach validates the expenditures of public funds to renourish the beach, including privately owned portions thereof, and assists the County in applying for and securing outside agency funding for beach renourishment; and

WHEREAS, the County Commission is entering into agreements with landowners to access and renourish privately owned portions of the Flagler County's beaches and is evaluating the purchase of certain beachfront lands in the northern portion of Flagler County, all with the goal of mitigating losses from future storm events; and

WHEREAS, there is a necessity for the County to remain under a local state of emergency to facilitate these projects all along the shoreline of the County, including the authority to undertake emergency procurement and other actions to protect public and private property; and

WHEREAS, neighborhoods and businesses along the shoreline are presently exposed to the ocean without adequate protection from natural dune structures; and

WHEREAS, taking stock of the losses sustained by the County to date, using analysis of independent coastal engineers, the County has estimated the aggregate present damage to the Flagler beaches to be $150 Million; and

WHEREAS, the vulnerability of the beaches is such that even weather events with heightened tides, not even classed as storm events, can take their toll on the beaches,

leading to further scarping and dune berm collapses and resulting damage to public and private property and infrastructure; and

WHEREAS, extending the local emergency declaration facilitates the County's ability to continue to respond to emergency conditions along the beaches and within lands containing public and private property and infrastructure, all with the goal of mitigating future losses.

NOW THEREFORE, in accordance with the emergency power vested in the County pursuant to Chapter 252, Florida Statutes, and Section 12-34 of the Flagler County Code of Ordinances, Flagler County hereby proclaims that:

1. The states of local emergency initially declared on October 4, 2016 (Hurricane Matthew), and expanded on September 26, 2022 (Hurricane Ian) and again on November 8, 2022 (Hurricane Nicole), all extended by emergency proclamations thereafter in accordance with Section 252.38(3), Florida Statutes, and duly ratified by the Board of County Commissioners, are hereby extended for an additional 7 days from the effective date of this Proclamation, unless terminated or modified earlier or extended in accordance with law.

2. All emergency powers authorized by the foregoing Proclamations declaring a state of local emergency, and extended every seventh day thereafter, are hereby retained and continued for the duration of this Proclamation.

DONE AND ORDERED in Flagler County, Florida, this 5th day of October 2026.

FLAGLER COUNTY BOARD OF COUNTY COMMISSIONERS

Leann Pennington, Chair

CONCURRENCE:

Adam Mengel
Interim County Administrator

Jonathan Lord
Emergency Management Director

APPROVED AS TO FORM:

Sean S. Moylan
Deputy County Attorney

Flagler County Board of County Commissioners
Consent: BOCC Departments / Agenda Item 7.b.

Meeting Date:	October 5, 2026
Department Contact:	Joseph Hegedus, Health and Human Services Director
Subject:	**Approval of HHS - Human Services Grant Agreement with SMA Healthcare Inc.** Staff recommends that the Board approve the FY 2026-27 Grant Agreement between Flagler County and SMA Healthcare, Inc. in the amount of $170,000.00 to support substance abuse and mental health treatment services.

Overview/Summary:
Mental health, alcohol, and drug abuse treatment services in Florida are funded primarily through the State of Florida Department of Children & Families to private, non-profit agencies in each county. Counties are mandated by Florida Statutes, Chapters 394 (mental health), 396 (alcohol), and 397 (drug abuse) to provide up to 25% local match for these state funds. To this aim, Flagler County has funded a performance-based grant agreement with SMA Healthcare Inc., administered and overseen by the County's Department of Health and Human Services (HHS) and funded as part of the Health and Human Services Division budget. The final grant report for FY 2025-26 is due early October but, to date, SMA Healthcare has met all grant deliverables and requirements for this FY grant, as well as those of all prior years.

The FY 2026-27 performance-based grant agreement with SMA Healthcare, Inc. provides a partial match for the aforementioned and statutorily required substance abuse and mental health treatment services. Specific services funded are outlined in Addendum A, Purchase of Service Standards of the Agreement but, in short, the grant supports the provision of the following services to Flagler County residents:

- Residential substance abuse treatment
- Emergency screening
- Crisis stabilization
- Medical outpatient
- Case management
- Substance abuse detoxification
- Adolescent outpatient
- Adult outpatient treatment
- Attendance at HHS outreach events

Strategic Plan:
Focus Area: Public Health and Safety
Goal 1: Increase Resident Awareness of Available Services of Health & Human

Services Department
Objective PHS 1.1: Provide a range of educational programs.

Goal 4: Expand Behavioral Health and Substance Abuse Programs
Objective PHS 4.1: Expand public-private partnerships to help remove barriers related to behavioral health access.

Funding Information:
Funding for SMA Healthcare, Inc. in the amount of $170,000 is included in the FY 2026-27 Adopted Budget in account 1001-105-0500-564800-560-56-000-000-582001.

Recommendations:
Staff recommends that the Board approve the FY 2026-27 Grant Agreement between Flagler County and SMA Healthcare, Inc. in the amount of $170,000.00 to support substance abuse and mental health treatment services.

Attachments:
1. Flagler County Health & Human Services - SMA Contract FY26-27

FLAGLER COUNTY HEALTH AND HUMAN SERVICES
GRANT AGREEMENT

Flagler County and the Provider identified below hereby agree to the following provisions and the attached Addendum A, incorporated herein:

1. **Provider Name:** SMA Healthcare, Inc.

   Address: 150 Magnolia Avenue, Daytona Beach, FL. 32114

   Telephone: 386-236-3200

   Designated Administrator for this Agreement: Ivan Cosimi, Chief Executive Officer

2. **County Fiscal Year:** 2026 – 2027

   Effective Date: October 1, 2026 (Commencement of Services)

   Date Services End: September 30, 2027 (for fiscal year)

   Amount of Grant: $170,000 (One Hundred Seventy Thousand Dollars)

3. **Service description:** Mental health and substance abuse treatment services. (See attached Addendum A)

4. **Special conditions on services to be provided or special conditions applicable to Provider's operation:**

   I. Provider agrees to do as follows:

   A) To accept the funds as appropriated in accordance with the terms of this Agreement and the standards for the appropriation of said funds as from time to time may be amended, and further, for funds to be accepted, all cost sharing or match contributions, if any, must be verifiable from the recipient's records and may not be paid by the Federal Government under another award, except where Federal statute authorizes such cost sharing or matching;

   B) To acknowledge familiarity with the Health Insurance Portability and Accountability Act, in accordance with 45 CFR §164.504(e), to comply with the provisions governing the safeguarding, use and disclosure of Protected Health Information created, received, maintained, or transmitted by the Provider or its subcontractors incidental to Provider's performance of this Agreement;

   C) To return to the County within fifteen (15) days on demand therefor all County funds paid to said Provider under the terms of this Agreement upon the Board of County Commissioners' finding that the terms of any agreement executed by the Provider, or the standards appropriating funds to the Provider, have been violated by the Provider;

   D) To consent to, upon request by the County:

      1. Such audits of the financial affairs of the Provider by the Office of the Clerk of the Court as the Board of County Commissioners may require;

2. Produce all documents related to the expenditure of Flagler County funds as required by the County;
3. Furnish the County with a copy of an audit report and, if issued, a management letter of its financial affairs for its fiscal year made by a certified public accountant. (Such audit report shall be due within 120 days of the close of the Provider's fiscal year);
4. Furnish the County with an annual report of receipts and expenditures of County funds in such form as the Clerk of the Court may prescribe (Such report shall be due within 120 days of the close of the County fiscal year);
5. Such audits of the client service records pertaining to the Flagler County grant held by Provider as the Human Services Program Manager, or the County's designee, may require, including access to non-personally identifiable client confidential records necessary to such an audit;
6. Provide the Human Services Program Manager, or the County's designee, with an overview of the Provider's activities including statistics, goals, and clients served with the quarterly invoice, and other information as requested by the County; and
7. Assign appropriate staff to meet with the Human Services Program Manager, or the County's designee, to assess quality of service and compliance and develop improvements and/or changes as requested by the County;

E) To provide services described herein to Flagler County residents. Further, the Provider may not enter into any subcontracts or sub-grants under the provisions of this Agreement without the County's written approval. The Provider must furnish the County with a copy of all proposed subcontracts or sub-grants prior to receiving written approval;

F) To make decisions regarding client eligibility without regard to, or consideration of, race, age, religion, gender, national origin, marital status, physical or mental disability, or other factors which cannot be lawfully or appropriately used as a basis for service delivery;

G) To agree and represent to the County that there will be no double billing to other government grant programs for the portion of services paid for by the County's grant, and to acknowledge that the County has relied upon that representation; and

H) To not use the funds received pursuant to this Agreement to support or oppose any candidate for public office, nor to support or oppose any issue before the voters or any elective body. Provider covenants not to engage in political activities while performing the services described herein.

II. The term of this Agreement shall be a one (1) year period from October 1, 2026 to September 30, 2027.

III. For services described herein, the County agrees to pay the Provider:

The sum of: $170,000 (One Hundred Seventy Thousand Dollars)

Payable as follows: Quarterly payments of $42,500 (Forty-two Thousand five hundred dollars)

Payable upon: Submission of an invoice and report of basic statistical information relevant to the Provider's services to the Human Services Program Manager, or the County's designee, by the 10th of the month following services provided. Failure to submit said invoice by the stated due date will result in non-payment of the billing cycle missed. Payment under this Agreement shall be governed by the Florida's Local Government Prompt Payment Act.

IV. Any changes in the scope of services must be approved, in writing, by the Human Services Program Manager, or the County's designee, provided that nothing herein shall authorize or allow any expenditure or obligation of funds in excess of the total sum of the Agreement.

V. The Provider services shall be provided in conformity with, and its facilities shall conform to, all state and federal laws and regulations regarding civil rights protections including, but not limited to, the Americans with Disabilities Act, the Civil Rights Acts and other state and federal laws dealing with discrimination. Furthermore, the Provider agrees that no person shall, on the basis of race, creed, color, national origin, sex, age, handicap, disability, genetics, or marital status, be excluded from participating in any activity conducting with or benefitting from this grant Agreement. Any complaints filed against the Provider of nondiscrimination laws described above shall be copied to the Human Services Program Manager, or the County's designee, within twenty (20) days of receipt by the Provider. Should the provider be deemed in violation of federal or state law by a court of competent jurisdiction or an appropriate state or federal administrative agency, the Human Services Program Manager, or the County's designee, may recommend to the Board of County Commissioners the termination of this grant. The Board of County Commissioners may terminate this grant based on the Human Services Program Manager's, or the County's designee's, recommendation.

VI. Provider shall have a Drug Free Workplace Program.

VII. Provider shall, at times hereafter, indemnify, hold harmless, and defend the County, its agents, County Commissioners, management, attorneys, and employees from and against any claim, demand, or cause of action of any kind or nature including, but not limited to, negligent error, omission, or act of Provider, its agents, servants or employees in the performance of services under this grant Agreement. Said indemnification shall survive the term of this grant Agreement.

VIII. This Agreement shall be subject to audit and inspection by the County for a period of five (5) years from the date of execution hereof. Venue for disputes involving this Agreement shall be the Seventh Judicial Circuit in and for Flagler County.

IX. The Contract Administrator for the County for this Agreement is the Human Services Program Manager, or the County's designee.

X. Pursuant to the Section 119.0701(2), Florida Statutes, the Provider shall allow public access to all documents, papers, letters, or other material subject to the provisions of Chapter 119, Florida Statutes, made or received by the Provider in conjunction with this Agreement. Specifically, the Provider must:

A) Keep and maintain public records that ordinarily and necessarily would be required by the County in order to perform the service, including but not limited to: meeting notes, progress reports, correspondence, memos, certifications, and invoices;
B) Provide the public with access to public records on the same terms and conditions that the County would provide the records and at a cost that does not exceed the cost provided by law;
C) Ensure that public records that are exempt or confidential and exempt from public records disclosure requirements are not disclosed except as authorized by law; and
D) Meet all requirements for retaining public records and transfer, at no cost to the County all public records in possession of the Provider upon termination of this Agreement and destroy any duplicate public records that are exempt or confidential and exempt from public records disclosure requirements. All records stored electronically must be provided to the County in a format that is compatible with the information technology systems of the County.

IF THE PROVIDER HAS QUESTIONS REGARDING THE APPLICATION OF CHAPTER 119, FLORIDA STATUTES, TO THE CONTRACTOR'S DUTY TO PROVIDE PUBLIC RECORDS RELATING TO THIS AGREEMENT, CONTACT THE CUSTODIAN OF PUBLIC RECORDS AT (386) 313-4005, publicrecords@flaglercounty.gov, or 1769 E. MOODY BLVD., BLDG. 2, BUNNELL, FL 32110.

XI. In performing the requirements herein, the Provider shall promptly provide the County with a copy of any request to inspect or to copy public records in possession of the Provider and consult with the County to ensure the request is responded to in accordance with the law. The Provider shall promptly provide the County with a copy of the Provider's response to each such request. Failure to grant such public access shall constitute a material default and the County shall be entitled to terminate this Agreement and to pursue any other remedies against the Provider available in equity or at law.

5. Termination. The County may terminate this Grant Agreement for cause by furnishing the Provider with notice of said termination at least ten days prior to the date of termination. Prior to terminating this Agreement for cause, the County will furnish the Provider a notice of default or deficiency and give the Provider an opportunity to cure the default or deficiency within a reasonable amount of time, but in no case shall the time to cure exceed thirty calendar days. In the event of termination, the County will pay the Provider a pro rata share for the services provided up through the date of termination.

[This Space Intentionally Left Blank. Signature Page to Follow.]

IN WITNESS WHEREOF, the parties have caused this Grant Agreement to be executed by their duly authorized representatives on the dates indicated below.

FLAGLER COUNTY BOARD OF COUNTY COMMISSIONERS

_____
Leann Pennington, Chair

_____
Date

ATTEST:

_____
Tom Bexley, Clerk of the Circuit Court and Comptroller

Approved as to form:

_____
Sarah E. Spector, Assistant County Attorney

[This Space Intentionally Left Blank. Signature Page to Follow.]

SMA Healthcare, Inc.

_____
President/Chief Operating Officer

ATTEST:

_____
Typed/Printed

_____
Signature

_____
Date

_____
Print Name, Title

_____
Date

[This Space Intentionally Left Blank.]

FLAGLER COUNTY HEALTH AND HUMAN SERVICES
GRANT AGREEMENT
ADDENDUM A
PURCHASE-OF-SERVICE STANDARDS

SMA Healthcare, Inc., previously identified as the Provider, will comply with the following standards, and provide to the residents of Flagler County the following performance-based services annually:

County grant funds are used to match Department of Children & Families, Substance Abuse & Mental Health grant.

1. Provide at least eighty-two (82) hours of medical, mental health outpatient services, provided by a licensed Medical Doctor or Advanced Registered Nurse Practitioner. Per quarter, this equates to at least twenty and one half (20.5) hours of medical, mental health outpatient services provided by licensed Medical Doctor or Advanced Registered Nurse Practitioner in each quarter of the grant term.

2. Provide at least one-hundred sixty (160) hours of case management services to mental health clients, provided by a cross-disciplinary team of therapists, case managers, and peer counselors. Per quarter, this equates to at least forty (40) hours of case management services to mental health clients, provided by a cross-disciplinary team of therapists, case managers, and peer counselors provided in each quarter of the grant term.

3. Provide at least seventy (70) bed days of mental health crisis stabilization. Per quarter, this equates to at least seventeen and one half (17.5) bed days of mental health crisis stabilization provided in each quarter of the grant term.

4. Provide at least sixty-two (62) hours of mental health screening services. Per quarter, this equates to at least fifteen and one half (15.5) hours of mental health screening services provided each quarter of the grant term.

5. Provide at least twenty-two (22) bed days of residential substance abuse treatment services. Per quarter, this equates to at least five and one half (5.5) bed days of residential substance abuse treatment services provided in each quarter of the grant term.

6. Provide at least two hundred nineteen and nine tenths (219.9) bed days of substance abuse detoxification services. Per quarter, this equates to roughly fifty-five (55) bed days of substance abuse detoxification services provided in each quarter of the grant term.

7. Provide at least three hundred six (306) hours of adult substance abuse outpatient treatment services. Per quarter, this equates to seventy-six and one half (76.5) hours of adult substance abuse outpatient treatment services provided in each quarter of the grant term.

8. Provide at least two hundred eighty-five (285) hours of adolescent substance abuse outpatient treatment services. Per quarter, this equates to seventy-one and one half (71.5) hours of adolescent substance abuse outpatient treatment services provided in each quarter of the grant term.

9. The Provider shall comply with all current performance standards as established by the State of Florida.

10. The Provider shall make every effort to recruit Flagler County residents to its Board of Directors.

11. The Provider shall interact with other human services agencies funded by the County, as well as attend the Flagler Resource Council meetings and any other interagency meetings concerning the delivery of services to Flagler County Residents.

12. Grantees are expected to attend Flagler County's Bi-Annual Outreach.

Flagler County Board of County Commissioners
Consent: BOCC Departments / Agenda Item 7.c.

Meeting Date:	October 5, 2026
Department Contact:	Brian Eichinger, OMB Manager
Subject:	**Approval of Repayment Time Beyond One Year for Outstanding Inter-Fund Loans from Fiscal Year 2025-26.**

Overview/Summary:
Staff are seeking approval for additional time to repay cash advances (aka Interfund Loans). This is not a request for additional funding, only additional repayment time.

Resolution 2023-70 adopted the County's Financial Management Policy. Per Section 2, the repayment of any inter-fund loan shall not exceed one year without approval of the Board of County Commissioners and any loans outstanding at fiscal year-end will be reported to the Board of County Commissioners.

The Tourist Development Beach Renourishment Fund (1111) was provided $2,845,000 to help with the cash-flow of several Dune Restoration Projects. Of this original advance, $2,145,000 remains for Local Funding Requirements for ACOE, 2/8/24 meeting. In Fiscal Year 2025-26, an additional $3,185,000 was advanced for Reach II Beach Renourishment.

The Grant Special Revenue Fund (1128) was provided $250,000 in advances to cash-flow for multiple reimbursement-based grants.

The Disaster Relief Fund (1184) was provided $3,999,043 to help with the cash flow of hurricane and disaster-related projects. As reimbursements are received from FEMA, portions of this advance will be repaid. $799,543 remains of the original advance. In Fiscal Year 2025-26, an additional $8,560,000 was added for the FEMA Cat G Dune Restoration Project.

The Bond-Capital Improvement Revenue Series 2020 Fund (1215) was advanced $1,507,000 to allow for the October 1st debt service payment for the FCSO Operations Center. This annual advance is repaid each year through funding provided in the annual budget.

The General Capital Project Fund (1316) was provided $4,000,000 in advance for construction of Flagler County's new SMA Healthcare Central Receiving Facility. Funding will be repaid by SMA on a reimbursement basis.

A total of $5,537,164 of cash advances were repaid in FY 2025-26.
- $2,000,000 – Fund 1112 Road Project grant reimbursements
- $1,500,000 – Fund 1184 Disaster related projects
- $1,494,000 – Fund 1215 Annual Debt Service Payment for FCSO Operations Center
- $ 531,000 – Fund 1130 Commerce Parkway

- $ 10,000 – Fund 1107 Law Library advance for beginning of year costs
- $ 2,050 – Fund 1114 Washington Oaks State Park Dune Restoration reimbursement
- $ 114 – Fund 1118 Hammock Dunes CDD Property Appraiser Special Assessment file

Strategic Plan:
Focus Area: Effective Government

Funding Information:
Once the above-mentioned funds have the required cash balance to sustain normal operations as well as repay their advances, staff will process the repayments.

Recommendations:
Staff recommends that the Board approve repayment time beyond one year for outstanding inter-fund loans from Fiscal Year 2025-26.

Attachments:
None

Flagler County Board of County Commissioners
Consent: BOCC Departments / Agenda Item 7.d.

Meeting Date:	October 5, 2026
Department Contact:	Michael Tucker, Fire Rescue Chief
Subject:	**Approval of the Re-Appointment of Mr. Robert Boggess II to the Emergency Medical Services Advisory Board (EMSAB).**

Overview/Summary:
The Commission has received an application for re-appointment from Mr. Robert Boggess II. Mr. Boggess is a Flagler County resident and registered voter and is currently an active member of the Emergency Medical Services Advisory Board.

Function: To serve as a member of the Emergency Medical Services Advisory Board (EMSAB) created by the County's Emergency Medical Services Ordinance No. 1991-06.
Membership: EMSAB membership is to fill the position of lay person living within the County.
Appointment Terms: All members of the EMSAB serve two year terms from the date of appointment.
Meeting Information: Meets the 2nd Monday at 9:30 a.m. of every odd month at the EOC.
Staff Liaison: Michael Tucker, Fire Chief (386) 313-4255, MTucker@FlaglerCounty.gov.

Vacancies are advertised on the County's website, www.FlaglerCounty.gov. If additional applications are received, they will be presented to the Board prior to the meeting.

Strategic Plan:
Focus Area: Effective Government
Goal 2 – Build & Maintain Relationships to Support Effective & Efficient Government

Funding Information:
N/A

Recommendations:
Staff recommends that the Board approve the re-appointment of Mr. Robert Boggess II to the Emergency Medical Services Advisory Board for a two-year term, from October 5, 2026 to October 5, 2028.

Attachments:
1. Application_ Robert W. Boggess, II - Redacted
2. Resume R.W. Boggess - Redacted
3. Application_ Robert W. Boggess, II
4. Resume R.W. Boggess

Flagler County Board of County Commissioners Volunteer Advisory Board and Committee General Application

Submitted by Robert W. Boggess, II (Reappointment request)

Applying for: Emergency Medical Services Advisory Board

Submitted Time: August 26, 2026 1:14 PM

Creation Time: August 26, 2026 1:14 PM

Personal Information

Full name	**Robert W. Boggess, II**
Date	**August 26, 2026**
Mailing address	[REDACTED], **Palm Coast, FL** [REDACTED]
Physical address	
County of residence	**Flagler**
Are you a registered voter?	**Yes**
Email	[REDACTED]
Phone 1	[REDACTED]
Phone 2	-

Board/Committee Information - Emergency Medical Services Advisory Board

What aspect of this Board/Committee interests you?	
Continued interest in EMS in general and making a contribution to the local EMS community	
Describe your training and/or experience that would make you a good fit for this position	
Been a member of the EMSAB for six (6) years. Worked as a Paramedic in Volusia County for 20 Years, then moved into EMS administration for another 27 years. Military medic for 4 years. Previous instructor in ACLS, BTLS, PHTLS, Emergency Vehicle Operations Couse (EVOC), as well as served on the Board of Directors of the National Association of EMTs, Vice-President of the Florida EMT Association, as well as Founding President of the EMT and Paramedic Society of FL	
What contributions do you feel you could make to this Board/Committee should you be selected?	
My experience in EMS operations, billing and compliance as well as computer information technology and software programming and database development.	
Have you ever served on a Flagler County appointed Board/Committee?	
Advisory Board/Committee 1	Served from to
Advisory Board/Committee 2	Served from to
Advisory Board/Committee 3	Served from to

Career Information

Education	
Highest education level completed	Master’s degree (e.g., MA, MS, MBA)
List each school and the degree(s) earned	Daytona Beach Community College - Associates of Science University of Central Florida - Batchelor's of Science in Business Administration University of Phoenix - Masters in Business Administration
Are you currently employed?	No
First employer	
Name of current employer	
Business/Employment type	
Employer address	
Business/Employer phone	
Position	
Second employer	
Name of second employer	
Business/Employment type	
Employer address	
Business/Employer phone	
Position	

Applicable professional organization memberships

Applicable professional organization memberships
None
List any additional information you wish to share

Terms and signature

If appointed, I will attend meetings in accordance with the adopted policies of Flagler County. If at any time my business or professional interests’ conflict with the interests of the Advisory Board or Committee, I will sign the appropriate (Form 8B) and excuse myself from participating in such deliberations. I understand that if appointed, I will serve at the pleasure of the Board of County Commissioners.

Applicant signature

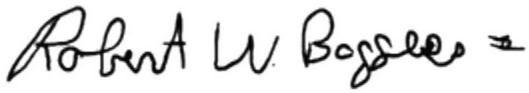

Date
August 26, 2026

[REDACTED]
Palm Coast, FL [REDACTED]

Phone [REDACTED]
Cell [REDACTED]
E-mail [REDACTED]

Robert W. Boggess, II

Education

1989 - 1995 University of Phoenix-Online San Francisco, CA
Masters in Business Administration

1985 - 1989 University of Central Florida Daytona Beach, FL
Masters in Business Administration

1981 - 1985 Daytona Beach Community College Daytona Beach, FL
Associate in Arts

Professional experience

2011-2019 County of Volusia (Retired)
General Services Manager

- Supervised the billing of all accounts
- Functioned as the Medicare Compliance Officer including doing pre-submission audits and reviews of select Medicare and Medicaid claims
- Conducted Financial Impact studies on HMO contracts
- Served as the EMS Privacy Officer

1982 - 2011 Emergency Medical Foundation, Inc.
d/b/a EVAC Ambulance Daytona Beach, FL

Director, Administrative Services

- Supervise the billing of all accounts
- Supervise the filing of all insurances, including Medicare, Medicaid, Automobile, Health Maintenance Organizations, etc.
- Supervise Information Systems (Computers)
- Conducted pre-submission audits on Medicare and Medicaid Claims
- Developed a Medicare and Medicaid compliance program
- Conducted financial impact studies on HMO contracts
- Computer Systems Design/Project Management
- Developed internal disaster/multi-causality incident plan

Acting Operations Manager

- Responsible for the daily operation of field personnel and associated equipment and resources

Supply Supervisor

- Responsible for the inventory and ordering of medical capital equipment and disposable supplies.

Payroll Supervisor

- Responsible for the processing and transmission of payroll using ADP

Station Supervisor

- Responsible for the direct and indirect supervision of EMTs and Paramedics assigned to the station;
- Ensuring that vehicles are inspected and kept clean, resupplied in accordance with State of Florida regulation, and
- cleaning and routine maintenance of station.

Field Training Officer

- Responsible for the planning and coordination of Mortality and Morbidity Conferences for field personnel, including mock trial utilizing a local practicing attorneys and a circuit judge;
- conduction field skills evaluation of personnel; and
- conducting on-the-job training of new employees.

Training Officer

- Supervising all training activities of the field personnel in the company;
- coordinating field training officers, planning and implementation of continuing education programs, and
- maintaining training records.

Emergency Medical Technician-Paramedic

- Evaluating and treating patients in the pre-hospital environment

1986 - 1987 Daytona Beach General Hospital (Part-Time) Holly Hill, FL

Emergency Room Technician

1986 - 1990 Daytona Beach Community College (Part-Time) Daytona Beach, FL

Adjunct Instruction, First Responder/EMT Program

1976 - 1981 Beacon Ambulance of Volusia County Daytona Beach, FL

Training Officer

- Supervising all training activities of the field personnel in the company;
- coordinating field training officers, planning and implementation of continuing education programs, and
- maintaining training records.

Emergency Medical Technician-Paramedic

- Evaluating and treating patients in the pre-hospital environment

Station Supervisor

- Responsible for the direct and indirect supervision of EMTs and Paramedics assigned to the station;
- ensuring that vehicles are inspected and kept clean, resupplied in accordance with State of Florida regulation, and
- cleaning and routine maintenance of station.

1972 - 1976 United States Air ForceKessler Medical Center, Biloxi, MS

Supply Supervisor, Emergency Department

- Responsible for the inventory and ordering of medical capital equipment and disposable supplies.

Medical Service Specialist

- Conducted preliminary examination of patients presenting in the emergency room;
- Drew blood specimens
- Preformed 12-lead EKGs
- Prepared and administered medications
- Performed suturing

1971 - 1972 Beacon Ambulance of Volusia County Daytona Beach, FL

Emergency Medical Technician

Awards received

Outstanding DBCC Alumni/EVAC Ambulance Employee, Daytona Beach Community, Nov 1990

Outstanding Leadership Award, EMT and Paramedic Society of Florida, Oct 1981

Outstanding Young Man of the Year, Ormond Beach Jaycees, Feb 1980

Thomas C Scott Leadership Award, Volusia-Flagler Chapter, Florida Association of EMTs, 1980

Flagler County Board of County Commissioners
Consent: BOCC Departments / Agenda Item 7.e.

Meeting Date: October 5, 2026
Department Contact: Holly Albanese, Library Director
Subject: **Approval of the Re-Appointment of Ms. Jeanne Nix to the Library Board of Trustees (LBOT).**

Overview/Summary:
The Commission has received one (1) application for re-appointment to this Board. Ms. Nix is a Flagler County resident and a registered voter.

Function: Established in accordance with Flagler County Code Section 25. The Board's function is to establish policies regarding the delivery of public library services and to report to the Board and citizens of the County at least once a year regarding the status, progress, and needs of the library in regard to the provision of these services.
Membership: Consists of seven (7) members appointed by the Board.
Appointment Terms: Three-year staggered terms
Meeting Date/Time: Meets monthly the First Tuesday at 4:30 pm.
Staff Liaison: Holly Albanese, Library Director

Current Term	Membership Appointment	(Initial Appointment Date)
03/20/2026 – 03/20/2029	Ms. Nancy Bettencourt	(03/20/2023)
07/10/2023 – 07/10/2029	Sharon B. Atack	(Appt 06/07/1993)
09/06/2023 – 09/06/2026	Ms. Jeanne Nix	(Appt 09/06/2020)
03/03/2025 – 03/03/2028	Mr. Donald O'Brien Jr	(Initial Term)
08/04/2025 – 08/04/2028	Ms. Rebecca Long	(Initial Term)
09/03/2025 – 09/03/2028	Ms. Safiya Soares	(Initial Term)
12/01/2025 – 12/01/2028	Ms. Helen VanDerhyden	(Initial Term)

Vacancies are advertised on the County's website www.FlaglerCounty.gov. If additional applications are received, they will be presented to the Board prior to the meeting.

Strategic Plan:
Focus Area: Effective Government
Goal 2 – Build & Maintain Relationships to Support Effective & Efficient Government

Funding Information:
N/A

Recommendations:
Staff recommends that the Board approve the re-appointment of Ms. Jeanne Nix to the Library Board of Trustees, for a three-year term from September 6, 2026, to September 6, 2029.

Attachments:

1. Library Board of Trustees - Request reappointment - Nix, J. - Redacted
2. Library Board of Trustees - Application - Nix, J. - Redacted
3. 2026 09 14 Letter of Reappointment LBOT - Nix, Jeanne - exp 2029 09 06 - Redacted
4. Library Board of Trustees - Request reappointment - Nix, J.
5. Library Board of Trustees - Application - Nix, J.
6. 2026 09 14 Letter of Reappointment LBOT - Nix, Jeanne - exp 2029 09 06
7. CN - Board Appt LBOT Jeanne Nix - 0) SR

Board of County Commissioners

1769 E. Moody Blvd, Bldg 2
Bunnell, FL 32110

FLAGLER COUNTY
FLORIDA

www.FlaglerCounty.gov
Phone: (386) 313-4001

Electronically Sent
September 6, 2026

Ms. Jeanne Nix
[REDACTED]
Palm Coast, FL [REDACTED]

Dear Ms. Nix:

Thank you for serving as a member of the Flagler County Library Board of Trustees. The time and effort you have given is greatly appreciated! As you may be aware, your current appointment expires on September 6, 2026.

We hope you will consider seeking reappointment.

If you are interested in continued participation, please indicate below. Return this letter and the reappointment application no later than September 14, 2026 for consideration by the Board of County Commissioners at an upcoming meeting.

☒ Please consider my reappointment
Signature: Jeanne Nix

☐ I do not wish to be reappointed
Signature: _____

Thank you for your attention to this matter and for your serving on the Flagler County Library Board of Trustees.

If you have any questions, please do not hesitate to contact us (386) 313-4001.

Kind Regards,

C: Holly Albanese, Library Director

Andy Dance District 1 | **Greg Hansen** District 2 | **Kim Carney** District 3 | **Leann Pennington** District 4 | **Pam Richardson** District 5

Flagler County Board of County Commissioners
Volunteer Advisory Board and Committee
General Application

☐ New Application ☒ Reappointment Request

Name: Jeanne Nix Date: September 6, 2026

Mailing Address: [REDACTED], Palm Coast, FL [REDACTED]

Physical Address *(if different)*:

County of Residence: Flagler Are you a registered voter? yes

Email: [REDACTED] Years in Flagler: 25

Phone: [REDACTED] ☐ Office ☐ Home ☒ Cell

Phone: ☐ Office ☐ Home ☐ Cell

Advisory Board/Committee Applying for: Library Board of Trustees

What aspect of this Board/Committee interests you?

As a retired English teacher, all aspects of community literacy interest me. Also, as a parent and grandparent, I believe that children's programming is important to a vibrant community.

Describe your training and/or experience that would make you a good fit for this position:

My 25 years of teaching - 12 years in Orange County (Florida) and 13 years in Flagler County (Matanzas High School).

What contributions do you feel you could make to this Board/Committee should you be selected?

I listen well and prepare for the meetings ahead of time, I.e., reading materials to be discussed. In addition, I am a library patron and borrow digital books regularly and attend various workshops offered by the library.

Have you ever served on a Flagler County appointed Board/Committee?

☐ No ☒ Yes, if so, please identify those on which you have served:

Advisory Board / Committee	Dates Served
Library Board of Trustees	2020-2023 & 2023-2026

Education: AB Smith college, MS Georgetown University

Business (name & type): realtor

Business Address: Realty Executives Oceanside, 235 Palm Coast Parkway ne, Palm Coast

Business Phone: [REDACTED] Position: realtor

Applicable Professional Organization Memberships:
National Association of Realtors

As an applicant, you are encouraged to provide additional information (including a cover letter and/or resume) to better explain your qualifications for the position for which you are making application. This information will aid in the decision of the County Commission when making appointments.

Additional Information you wish to share:

If appointed, I will attend meetings in accordance with the adopted policies of Flagler County. If at any time my business or professional interests' conflict with the interests of the Advisory Board or Committee, I will sign the appropriate (Form 8B) and excuse myself from participating in such deliberations. I understand that if appointed, I will serve at the pleasure of the Board of County Commissioners.

Applicant Signature

9/6/2026
Date

Email Application To: halbanese@flaglercounty.gov
**Please note a hard copy is not required.*

Flagler County BOCC
Attn: Administration
1769 E. Moody Blvd., Building 2, Suite 302, Bunnell, FL 32110

Additional Questions: (386) 313-4001

Board of County Commissioners

1769 E. Moody Blvd. Bldg. 2
Bunnell, FL 32110

FLAGLER COUNTY FLORIDA

www.FlaglerCounty.gov
Phone: (386) 313-4001

October 5, 2026
Electronically sent [REDACTED]

RE: Flagler County Library Board of Trustees

Dear Ms. Nix:

Congratulations on your reappointment to the Library Board of Trustees. We appreciate your willingness to serve the citizens of Flagler County in this capacity. The Flagler County Board of County Commissioners approved your reappointment at their meeting and this three-year term will expire on September 6, 2029.

The Flagler County Advisory Board Member Orientation Packet and Library Board of Trustees current membership list are included with this letter. This packet provides information regarding your role as an advisory board member, the role of the staff liaison, as well as Sunshine Law and Public Records Law guidelines.

Library Board of Trustees Meeting Information:

Meetings: 1st Tuesday of the Month at 4:30 p.m.
Location: Flagler County Library, 2500 Palm Coast Parkway NW, Palm Coast, FL
Staff Liaison: Holly Albanese, Library Director
(386) 313-4078 – halbanese@flaglercounty.gov

On behalf of the Flagler County Board of County Commissioners, we extend our best wishes for success and our appreciation for your continued involvement.

Sincerely,

Leann Pennington, Chair
Flagler County Board of County Commissioners

Enclosures
C: Holly Albanese, Library Director, Liaison Library Board of Trustees

Andy Dance District 1 | **Greg Hansen** District 2 | **Kim Carney** District 3 | **Leann Pennington** District 4 | **Pam Richardson** District 5

Flagler County Board of County Commissioners
Consent: BOCC Departments / Agenda Item 7.f.

Meeting Date:	October 5, 2026
Department Contact:	Kelly Bowman, Procurement Coordinator, Jessica Martin, Procurement Coordinator
Subject:	**Approval to Piggyback the Pinellas County Agreement #26-0488-RFP: On-Line Auction Services for Miscellaneous Surplus with Liquidity Services Operations LLC d/b/a GovDeals, Inc.**

Overview/Summary:
Staff is seeking authorization to piggyback on the Pinellas County Board of County Commissioners agreement with GovDeals, Inc., per Request for Proposal (RFP) 26-0488-RFP for On-Line Auction Services for Miscellaneous Surplus. This is a revenue-based cooperative contract for online auction services of miscellaneous surplus items such as computers, monitors, printers, tools, copiers, furniture, rolling stock, etc.

On August 24, 2026, the Pinellas Board of County Commissioners entered into agreement for sixty (60) months, expiring August 26, 2031. There are no charges to the County for services provided which may include marketing efforts, training, software upgrades, onsite consultation and support. All agencies that piggyback this contract are eligible to earn a year-end rebate based on the aggregated sales volume.

Strategic Plan:
Goal 1 – Maintain Financial Stability

Funding Information:
N/A

Recommendations:
Staff recommends that the Board approve the piggyback of Pinellas County Board of County Commissioners Agreement per Request for Proposal (RFP) 26-0488-RFP for On-Line Auction Services for Miscellaneous Surplus with GovDeals, Inc. and authorize the Chair to execute the Flagler County Cooperative Agreement #26-PB-024 as approved as to form by the County Attorney and approved by the Interim County Administrator.

Attachments:
1. 07 CN - 26-PB-024 - 1) On-Line Auction Services - GovDeals - witness

Docusign Envelope ID: F7D66D6B-AE6E-84A9-83B3-D80E6B7A3913

COOPERATIVE PURCHASE AGREEMENT
FOR ONLINE AUCTION SERVICES OF MISCELLANEOUS SURPLUS
26-PB-024

This Cooperative Purchase Agreement ("Agreement") by and between the Flagler County Board of County Commissioners, a political subdivision of the State of Florida, whose address is 1769 East Moody Boulevard, Building 2, Bunnell, Florida 32110, ("County"), and Liquidity Services Operation, LLC d/b/a/GovDeals, a Maryland limited liability company, whose address is 6931 Arlington Rd., Ste. 460, Bethesda, MD 20814 ("Contractor").

RECITAL

A. The County desires to "piggyback" from the Pinellas County Contract Number 26-0488-RFP for On-Line Auction Services for Miscellaneous Surplus - Revenue, dated August 27, 2026, attached hereto as Attachment A and incorporated herein ("Pinellas County Agreement").

B. The Flagler County Board of County Commissioners, on October 5, 2026, approved this Agreement.

NOW, THEREFORE, in consideration of the mutual covenants and promises herein contained, the Contractor and the County agree as follows:

TERMS

1. **RECITALS:** The recitals are true and correct and are hereby incorporated into and made a part of this Agreement.

2. **TERM:** The term of this Agreement is October 5, 2026 through August 26, 2031.

3. **SCOPE OF WORK:**

A. The Contractor agrees to provide the Services/Supplies to the County as specifically described and set forth in the Pinellas County Agreement. The provisions of this Agreement shall control in the event of any conflict between it and the provisions of the Pinellas County Agreement.

B. The Contractor represents and warrants to the County that: (i) it possesses all qualifications, licenses and expertise required under the Solicitation Documents for the performance of the Services; (ii) it is not delinquent in the performance of any obligations to the County under any other contract; (iii) all personnel assigned to perform the Services are and shall be, at all times during the term hereof, fully qualified and trained to perform the tasks assigned to each; and (iv) the Services will be performed in accordance with the Pinellas County Agreement.

4. **COMPENSATION:** The County agrees to pay the Contractor for the faithful performance under this Agreement based on the provisions of the Pinellas County Agreement.

5. **PUBLIC RECORDS:** The Contractor Acknowledges that it has read and understands and agrees to comply with the Florida Public Records Law. Pursuant to Section 119.0701(2), Fla. Stat., the Contractor shall allow public access to all documents, papers, letters, or other material subject to the provisions of Chapter 119, Fla. Stat., made or received by the Contractor in conjunction with this Agreement. Specifically, the Contractor shall:

Docusign Envelope ID: F7D66D6B-AE6E-84A9-83B3-D80E6B7A3913

A. Keep and maintain public records that ordinarily and necessarily would be required by the County in order to perform the Services including, but not limited to, correspondence and reports;

B. Provide the public with access to public records on the same terms and conditions that the County would provide the records and at a cost that does not exceed the cost provided by law;

C. Ensure that public records that are exempt or confidential and exempt from public records disclosure requirements are not disclosed except as authorized by law; and

D. Meet all requirements for retaining public records and transfer, at no cost, to the County all public records in possession of the Contractor upon termination of this Agreement and destroy any duplicate public records that are exempt or confidential and exempt from public records disclosure requirements. All records stored electronically must be provided to the County in a format that is compatible with the information technology systems of the County.

The Contractor shall promptly provide the County with a copy of any requests to inspect or to copy public records in possession of the Contractor and shall promptly provide the County with a copy of the Contractor's response to each such request. Failure to grant such public access will be grounds for immediate termination of this Agreement by the County.

IF THE CONTRACTOR HAS QUESTIONS REGARDING THE APPLICATION OF CHAPTER 119, FLORIDA STATUTES, TO THE CONTRACTOR'S DUTY TO PROVIDE PUBLIC RECORDS RELATING TO THIS AGREEMENT, CONTACT THE CUSTODIAN OF PUBLIC RECORDS, (386) 313-4005; PUBLICRECORDS@FLAGLERCOUNTY.GOV; or 1769 E. MOODY BLVD., BLDG. 2, BUNNELL, FL 32110

6. **COMPLIANCE WITH FEDERAL, STATE AND LOCAL LAWS:** The Contractor understands that agreements between private entities and local governments are subject to certain laws and regulations, including laws pertaining to public records, conflict of interest, record keeping, disclosures, etc. County and the Contractor agree to comply with and observe all applicable laws, codes and ordinances as they may be amended from time to time.

7. **INDEMNIFICATION:** The Contractor shall indemnify, defend and hold harmless the County and its officials, employees and agents (collectively referred to as "Indemnitees") and each of them from and against all loss, costs, penalties, fines, damages, claims, expenses (including attorney's fees) or liabilities (collectively referred to as "Liabilities") by reason of any injury to or death of any person or damage to or destruction or loss of any property arising out of, resulting from, or in connection with: (i) the performance or non-performance of the services contemplated by this Agreement which is or is alleged to be directly or indirectly caused, in whole or in part, by any act, omission, default or negligence (whether active or passive) of the Contractor or its employees, agents or subcontractors (collectively referred to as "Contractor"), unless it is, or is alleged to be caused in whole (whether individual, joint, concurrent or contributing) by any act, omission, default or negligence (whether active or passive) of the Indemnitees, or any of them, or (ii) the failure of the Contractor to comply with any of the paragraphs herein or the failure of the Contractor to conform to statutes, ordinances, or other regulations or

Docusign Envelope ID: F7D66D6B-AE6E-84A9-83B3-D80E6B7A3913

requirements of any governmental authority in connection with the performance of this Agreement. The Contractor expressly agrees to indemnify and hold harmless the Indemnitees, or any of them, from and against all liabilities which may be asserted by an employee or former employee of the Contractor, or any of its subcontractors, as provided above, for which the Contractor's liability to such employee or former employee would otherwise be limited to payments under state Workers' Compensation or similar laws. This section shall survive the termination of this Agreement.

8. **DEFAULT:** If the Contractor fails to comply with any term or condition of this Agreement, or fails to perform any of its obligations hereunder, then the Contractor shall be in default. Upon the occurrence of a default hereunder the County, in addition to all remedies available to it by law, may immediately, upon written notice to the Contractor, terminate this Agreement whereupon all payments, advances, or other compensation paid by the County to the Contractor while the Contractor was in default shall be immediately returned to the County. The Contractor understands and agrees that termination of this Agreement under this section shall not release the Contractor from any obligation accruing prior to the effective date of termination.

9. **RESOLUTION OF CONTRACT DISPUTES:** The Contractor understands and agrees in the event of a dispute between the Contractor and the County based upon an alleged violation of the terms of this Agreement by the County, the Contractor shall submit a detailed statement of the dispute, accompanied by all supporting documentation, to the County Administrator or designee for his/her resolution. The Contractor shall not commence litigation until the County Administrator or designee issues a written determination as to the dispute or the expiration of sixty (60) days from the submission of the dispute, whichever is earlier.

10. **TERMINATION RIGHTS:**

A. The County shall have the right to terminate this Agreement, in its sole discretion, at any time, by giving written notice to the Contractor at least thirty (30) business days prior to the effective date of such termination. In such an event, the County shall pay the Contractor compensation for services rendered and expenses incurred prior to the effective date of termination. In no event shall the County be liable to the Contractor for any additional compensation, other than that provided herein, or for any consequential or incidental damages.

B. The County shall have the right to terminate this Agreement, with notice to the Contractor, upon the occurrence of an event of default hereunder. In such event, the County shall not be obligated to pay any amounts to the Contractor while the Contractor was in default under this Agreement.

11. **INSURANCE:** The Contractor shall, at all times during the term hereof, maintain such insurance coverage at the minimum amounts and types of Insurance described in Attachment "B", attached hereto and incorporated herein. Evidence of such coverage shall be furnished to the County on Certificates of Insurance indicating such insurance to be in force and effect and providing that it will not be canceled during the performance of the services under this Agreement without thirty (30) calendar days prior written notice to the County or, alternatively, reconfirmation of the insured status of coverage in accordance with Attachment B.

Docusign Envelope ID: F7D66D6B-AE6E-84A9-83B3-D80E6B7A3913

12. **NOTICES:** All notices or other communications required under this Agreement shall be in writing and shall be given by hand-delivery or by certified U.S. Mail, return receipt requested, addressed to the other party at the address indicated below or to such other address as a party may designate by notice given as herein provided. Notice shall be deemed given on the day on which personally delivered; or, if by mail, on the fifth day after being posted or the date of actual receipt, whichever is earlier.

TO THE CONTRACTOR:

Liquidity Services Operations LLC
6931 Arlington Rd, Ste 469
Bethesda, MD 20814

TO THE COUNTY:

Flagler County BOCC
Attn: Office of Procurement and Contracts
1769 E. Moody Blvd., Building 2
Bunnell, Florida 32110

13. **MISCELLANEOUS PROVISIONS:**

A. This Agreement shall be construed and enforced according to the laws of the State of Florida except its conflict of laws provisions. Venue for any legal proceedings shall be in the Seventh Judicial Circuit in and for Flagler County, Florida. In order to expedite the conclusion of any litigation between them involving this Agreement, the parties mutually waive their right to demand a jury trial and/or file permissive counterclaims in such civil actions.

B. Title and paragraph headings are for convenient reference and are not a part of this Agreement.

C. No waiver or breach of any provision of this Agreement shall constitute a waiver of any subsequent breach of the same or any other provision hereof, and no waiver shall be effective unless made in writing.

D. Should any provision, paragraph, sentence, word or phrase contained in this Agreement be determined by a court of competent jurisdiction to be invalid, illegal or otherwise unenforceable under the laws of the State of Florida, such provision, paragraph, sentence, word or phrase shall be deemed modified to the extent necessary in order to conform with such laws, or if not modifiable, then same shall be deemed severable, and in either event, the remaining terms and provisions of this Agreement shall remain unmodified and in full force and effect.

E. This Agreement constitutes the sole and entire agreement between the parties hereto. No modification or amendment hereto shall be valid unless in writing and executed by properly authorized representatives of the parties hereto.

F. This Agreement shall be binding upon the parties hereto, their heirs, executors, legal representatives, successors, or assigns. This Agreement shall not be assigned by the Contractor, in whole or in part, without the prior written consent of the County, which may be withheld or conditioned, in the County's sole discretion.

Docusign Envelope ID: F7D66D6B-AE6E-84A9-83B3-D80E6B7A3913

G. The Contractor has been procured and is engaged to provide services to the County as an independent Contractor, and not as an agent or employee of the County.

IN WITNESS WHEREOF, the parties hereto have caused this instrument to be executed by their respective officials thereunto duly authorized, this the day and year above written.

ATTEST:

_____

Tom Bexley, Clerk of the Circuit Court and Comptroller

FLAGLER COUNTY BOARD OF COUNTY COMMISSIONERS

_____

Leann Pennington, Chair

APPROVED AS TO FORM:

Sean S. Moylan Digitally signed by Sean S. Moylan Date: 2026.09.17 11:37:49 -04'00'

_____

Sean S. Moylan, Deputy County Attorney

As authorized for execution by the Board of Flagler County Board of County Commissioners at its October 5, 2026, regular meeting.

[THIS SPACE INTENTIONALLY LEFT BLANK; SIGNATURE PAGE TO FOLLOW.]

Docusign Envelope ID: F7D66D6B-AE6E-84A9-83B3-D80E6B7A3913

WITNESS:

Signed by:
Laurie Goldstein
D280C245974E45B...
Signature

Laurie Goldstein Manager, Proposal Team
Print Name, Title

Liquidity Services Operations LLC, D/B/A GovDeals

Signed by:
Nick Carr
C36DB6C7CA2C4B7...
Signature

Nick Carr Vice President
Print Name, Title

9/22/2026
Date

[THIS SPACE INTENTIONALLY LEFT BLANK; ATTACHMENTS A & B TO FOLLOW.]

Docusign Envelope ID: F7D66D6B-AE6E-84A9-83B3-D80E6B7A3913

ATTACHMENT "A"

Agreement between Pinellas County and Liquidity Services Operations LLC, d/b/a GovDeals, as presented to the Flagler County Board of County Commissioners on file with the Clerk of County and with the Procurement & Contract Services Manager of Flagler County.

Docusign Envelope ID: F7D66D6B-AE6E-84A9-83B3-D80E6B7A3913

AGREEMENT

26-0488-RFP

On-Line Auction Services for Miscellaneous Surplus - Revenue

This Agreement (the "Agreement" or "Contract"), is entered into on the date last executed below ("Effective Date"), by and between Pinellas County, a subdivision of the State of Florida whose primary address is 315 Court Street, Clearwater, Florida 33756 ("COUNTY") and Liquidity Services Operations LLC, 6931 Arlington Rd., Ste. 460, Bethesda, MD 20814 (hereinafter "CONTRACTOR" or "Vendor") (jointly, the "Parties").

NOW THEREFORE, the Parties agree as follows:

A. **Documents Comprising Agreement**

1. This Agreement, including the Exhibits listed below, constitutes the entire agreement and understanding of the Parties with respect to the transactions and services contemplated hereby and supersedes all prior agreements, arrangements, and understandings relating to the subject matter of the Agreement. The documents listed below are hereby incorporated into and made a part of this Agreement:

   a. This Agreement

   b. Exhibit A - Pinellas County Standard Terms & Conditions, located on Pinellas County Purchasing's website, effective 4/10/2025, posted at https://pinellas.gov/county-standard-terms-conditions/

   c. Solicitation Section 4, titled Special Conditions attached as Exhibit B.

   d. Solicitation Section 5, titled Insurance Requirements attached as Exhibit C.

   e. Contractor's response to Solicitation Section 6, titled Scope of Work / Specifications attached as Exhibit D.

   f. Contractor's response to Solicitation Section 9, titled Pricing Proposal attached as Exhibit E.

2. In the case of a conflict, the terms of this document govern, followed by the terms of the attached Exhibits, which control in the order listed above.

B. **Term**

1. Unit prices submitted of listed items Exhibit E will be held firm for the duration of the Agreement. Duration of the Agreement will be for a period of 60 months from the Effective Date (the "Contract Term").

C. **Expenditures Cap**

1. Payment and pricing terms for the initial and renewal terms are subject to the Pricing Proposals in Exhibit E. County expenditures under the Agreement will not exceed $110,000.00 for the Contract Term without a written amendment to this Agreement.

Docusign Envelope ID: F7D66D6B-AE6E-84A9-83B3-D80E6B7A3913

2. In no event will annual expenditures exceed $30,000.00 in any given fiscal year without a written amendment to the Agreement.

D. **Entire Agreement**

1. This Agreement constitutes the entire agreement between the Parties.

IN WITNESS WHEREOF, the Parties have caused this Agreement to be executed by their undersigned officials, who are duly authorized to bind the Parties to the Agreement.

For Contractor: **Liquidity Services Operations LLC**

Signature: Signed by: Nick Carr C36DB6C7CA2C4B7...

Print Name and Title: Nick Carr, Vice President, Revenue

Date: 8/24/2026

For County:

Signature:

Print Name and Title: Merry Celeste, Purchasing Official

Date: 8/27/2026

APPROVED AS TO FORM
By: *Keiah Townsend*
Office of the County Attorney

Docusign Envelope ID: F7D66D6B-AE6E-84A9-83B3-D80E6B7A3913

1. Special Terms & Conditions

1.1. INTENT

It is the intent of Pinellas County to establish an Agreement for On-Line Auction Services for Miscellaneous Surplus - Revenue to be ordered, as and when required.

1.2. NON-NEGOTIABLE TERMS

While the County prefers that no exceptions to its contract terms be taken, the solicitation does authorize respondent to take exception to terms as part of its submittal. The County has deemed the following contract terms in the County's Standard Terms & Conditions https://pinellas.gov/county-standard-terms-conditions/ to be non-negotiable:

Section 3: Compliance with Applicable Laws (all terms)

Section 7: Indemnification & Liability (all terms)

Section 8: Insurance & Conditions Precedent

Section 10(G): Governing Law & Venue

Section 12(A): Fiscal Non-Funding

Section 13: Confidential Records, Public Records, & Audit (all terms)

Section 19: Digital Content (all terms) (*if the Agreement includes software, online, or digital content services*)

Any terms required by law

1.3. PRICING/PERIOD OF CONTRACT

Unit prices submitted of listed items will be held firm for the duration of the Agreement. Duration of the Agreement will be for a period of 60 months from the date of Agreement award and any extension thereof.

1.4. TERM EXTENSION(S) OF CONTRACT

Not Applicable

1.5. PRE-COMMENCEMENT MEETING

Upon award of the Agreement, the County will coordinate a pre-commencement meeting with the successful Contractor. The meeting will require Contractor and the County Representative to review specific Agreement details and deliverable documents at this meeting to ensure the scope of work and work areas are understood.

Docusign Envelope ID: F7D66D6B-AE6E-84A9-83B3-D80E6B7A3913

1.6. ORDERS

Within the term of this Agreement, County may place one or more orders for goods and/or services at the prices listed on the Pricing Proposal section of this solicitation, which is incorporated by reference hereto.

1.7. ASBESTOS MATERIALS

The Contractor must perform all Work in compliance with Federal, State and local laws, statutes, rules, regulations and ordinances, including but not limited to the Department of Environmental Protection (DEP)'s asbestos requirements, 40 CFR Part 61, Subpart M, and OSHA Section 29 CFR 1926.58. Additionally, the Contractor must be properly licensed and/or certified for asbestos removal as required under Federal, State and local laws, statutes, rules, regulations and ordinances. The County is responsible for filing all DEP notifications and furnish a copy of the DEP notification and approval for demolition to the successful Contractor. The County will furnish a copy of the asbestos survey to the successful Contractor. The Contractor must keep this copy on site at all times during the actual demolition.

1.8. SERVICES

The terms below are applicable if the Solicitation includes the provision of SERVICES:

A. **ADD/DELETE LOCATIONS SERVICES** - The County reserves the right to unilaterally add or delete locations/services, either collectively or individually, at the County's sole option, at any time after award has been made as may be deemed necessary or in the best interests of the County. In such case, the Contractor(s) will be required to provide services to this agreement in accordance with the terms, conditions, and specifications.

1.9. GOODS & PRODUCTS

The terms below are applicable if the Solicitation includes the purchase of GOODS or PRODUCTS:

A. **DELIVERY/CLAIMS** - Prices quoted will be FOB Destination, freight included and unloaded to location(s) within Pinellas County. Actual delivery address(s) will be identified at time of order. Successful Contractor(s) will be responsible for making any and all claims against carriers for missing or damaged items.

1.10. QUANTITIES

Any quantities stated are an estimate only and no guarantee is given or implied as to quantities that will be used during the Agreement period. Estimated quantities are based upon previous use and/or anticipated needs.

1.11. PERFORMANCE SECURITY

Not Applicable

Docusign Envelope ID: F7D66D6B-AE6E-84A9-83B3-D80E6B7A3913

1.12. FEES AND EXPENSES

The agreed to compensation will include all standard day-to-day administrative, overhead and internal expenses; including, but not limited to:

- computer/software
- support
- equipment and usage
- office supplies
- telephone charges
- safety equipment
- emails
- consumables
- electronic data transmission fees
- other consulting services
- standard copier usage
- special presentations
- fax charges
- regular and certified postage
- travel, per diem and lodging charges, unless otherwise agreed to by the County in the Services Agreement

Travel and lodging expenses will be included in the lump sum proposal and will be paid in accordance with Florida Statute 112.061.

Docusign Envelope ID: F7D66D6B-AE6E-84A9-83B3-D80E6B7A3913

1. Insurance Requirements

1.1. INSURANCE (General)

The Vendor must provide a certificate of insurance and endorsement in accordance with the insurance requirements listed below, prior to recommendation for award. The Vendor shall obtain and maintain, and require any subcontractor to obtain and maintain, at all times during its performance of the Agreement in Phase 1 insurance of the types and in the amounts set forth. For projects with a Completed Operations exposure, Vendor shall maintain coverage and provide evidence of insurance for 2 years beyond final acceptance. All insurance policies shall be from responsible companies duly authorized to do business in the State of Florida and have an AM Best rating of VIII or better.

1.2. INSURANCE (Requirements)

A. Submittals should include, the Vendor's current Certificate(s) of Insurance. If Vendor does not currently meet insurance requirements, Vendor shall also include verification from their broker or agent that any required insurance not provided at that time of submittal will be in place prior to the award of contract. Upon selection of Vendor for award, the selected Vendor shall email certificate that is compliant with the insurance requirements. If the certificate received is compliant, no further action may be necessary. The Certificate(s) of Insurance shall be signed by authorized representatives of the insurance companies shown on the Certificate(s).

B. **The Certificate holder section shall indicate Pinellas County, a Political Subdivision of the State of Florida, 400 S Fort Harrison Ave, Clearwater, FL 33756. Pinellas County, a Political Subdivision shall be named as an Additional Insured for General Liability. A Waiver of Subrogation for Workers Compensation shall be provided if Workers Compensation coverage is a requirement.**

C. Approval by the County of any Certificate(s) of Insurance does not constitute verification by the County that the insurance requirements have been satisfied or that the insurance policy shown on the Certificate(s) of Insurance is in compliance with the requirements of the Agreement. County reserves the right to require a certified copy of the entire insurance policy, including endorsement(s), at any time during the Bid and/or contract period.

D. If any insurance provided pursuant to the Agreement expires or cancels prior to the completion of the Work, you will be notified by CTrax, the authorized vendor of Pinellas County. Upon notification, renewal Certificate(s) of Insurance and endorsement(s) shall be furnished to Pinellas County Risk Management at InsuranceCerts@pinellascounty.org and to CTrax c/o JDi Data at PinellasSupport@ididata.com by the Vendor or their agent prior to the expiration date.

1. Vendor shall also notify County within twenty-four (24) hours after receipt, of any notices of expiration, cancellation, nonrenewal or adverse material change in coverage received by said Vendor from its insurer Notice shall be given by email to Pinellas County Risk

Docusign Envelope ID: F7D66D6B-AE6E-84A9-83B3-D80E6B7A3913

Management at InsuranceCerts@pinellascounty.org. Nothing contained herein shall absolve Vendor of this requirement to provide notice.

2. Should the Vendor, at any time, not maintain the insurance coverages required herein, the County may terminate the Agreement,.

E. If subcontracting is allowed under this Bid, the Primary Vendor shall obtain and maintain, at all times during its performance of the Agreement, insurance of the types and in the amounts set forth; and require any subcontractors to obtain and maintain, at all times during its performance of the Agreement, insurance limits as it may apply to the portion of the Work performed by the subcontractor; but in no event will the insurance limits be less than $500,000 for Workers' Compensation/Employers' Liability, and $1,000,000 for General Liability and Auto Liability if required below.

1. All subcontracts between the Vendor and its Subcontractors shall be in writing and are subject to the County's prior written approval. Further, all subcontracts shall

   a. Require each Subcontractor to be bound to the Vendor to the same extent the Vendor is bound to the County by the terms of the Contract Documents, as those terms may apply to the portion of the Work to be performed by the Subcontractor;

   b. Provide for the assignment of the subcontracts from the Vendor to the County at the election of Owner upon termination of the Contract;

   c. Provide that County will be an additional indemnified party of the subcontract;

   d. Provide that the County will be an additional insured on all insurance policies required to be provided by the Subcontractor except workers compensation and professional liability;

   e. Provide a waiver of subrogation in favor of the County and other insurance terms and/or conditions

   f. Assign all warranties directly to the County; and

   g. Identify the County as an intended third-party beneficiary of the subcontract. The Vendor shall make available to each proposed Subcontractor, prior to the execution of the subcontract, copies of the Contract Documents to which the Subcontractor will be bound by this Section C and identify to the Subcontractor any terms and conditions of the proposed subcontract which may be at variance with the Contract Documents.

F. Each insurance policy and/or certificate shall include the following terms and/or conditions:

1. The Named Insured on the Certificate of Insurance and insurance policy must match the entity's name that responded to the solicitation and/or is signing the agreement with the County.

Docusign Envelope ID: F7D66D6B-AE6E-84A9-83B3-D80E6B7A3913

2. Companies issuing the insurance policy, or policies, shall have no recourse against County for payment of premiums or assessments for any deductibles which all are at the sole responsibility and risk of Vendor.
3. The term "County" or "Pinellas County" shall include all Authorities, Boards, Bureaus, Commissions, Divisions, Departments and Constitutional offices of County and individual members, employees thereof in their official capacities, and/or while acting on behalf of Pinellas County.
4. All policies shall be written on a primary, non-contributory basis.

The minimum insurance requirements and limits for this Agreement, which shall remain in effect throughout its duration and for two (2) years beyond final acceptance for projects with a Completed Operations exposure, are as follows:

1.3. COMMERCIAL GENERAL LIABILITY INSURANCE

Includes, but not limited to, Independent Vendor, Contractual Liability Premises/Operations, Products/Completed Operations, and Personal Injury.

A. Limits
   1. Combined Single Limit Per Occurrence $ 1,000,000
   2. Products/Completed Operations Aggregate $ 2,000,000
   3. Personal Injury and Advertising Injury $ 1,000,000
   4. General Aggregate $ 2,000,000

1.4. CYBER RISK LIABILITY (NETWORK SECURITY/PRIVACY LIABILITY) INSURANCE

To include cloud computing and mobile devices, for protection of private or confidential information whether electronic or non- electronic, network security and privacy; privacy against liability for system attacks, digital asset loss, denial or loss of service, introduction, implantation or spread of malicious software code, security breach, unauthorized access and use; including regulatory action expenses; and notification and credit monitoring expenses with at least minimum limits as follows:

A. Limits
   1. Each Occurrence $ 1,000,000
   2. General Aggregate $ 1,000,000

B. For acceptance of Cyber Risk Liability coverage included within another policy required herein, a statement notifying the certificate holder must be included on the certificate of insurance and the total amount of said coverage per occurrence must be greater than or equal to the amount of Cyber Risk Liability and other coverage combined.

Docusign Envelope ID: F7D66D6B-AE6E-84A9-83B3-D80E6B7A3913

1.5. PROPERTY INSURANCE

Vendor will be responsible for all damage to its own property, equipment and/or materials.

Docusign Envelope ID: F7D66D6B-AE6E-84A9-83B3-D80E6B7A3913

1. Scope of Work / Specifications

1.1. OBJECTIVE/JUSTIFICATION

Pinellas County is seeking to establish a contract with a qualified online auction service provider offering a comprehensive web-based auction system for the sale of miscellaneous surplus equipment to include but not limited to computers, monitors, printers, tools, construction equipment, furniture, etc. The objective with an online auction service program is as follows:

- Reduction in on-hand surplus inventory and related inventory carrying costs
- Increase market presence and bidder base
- Increase bid price for auction items
- Ease of online auction program administration, including but not limited to posting and marketing of auctions, receiving payment from bidders, blocking bidders and invoicing.
- Proposers are encouraged to provide creative solutions and to identify additional areas (scope, requirements and fees).

1.2. SCOPE OF WORK

To provide on-line auction services for the sale of miscellaneous County-owned surplus equipment.

1.3. MINIMUM REQUIREMENTS

A. The Contractor shall have the applicable experience performing online auctioning services, specifically with municipal and governmental agencies.

B. The Contractor shall be required to maintain and support the proposed solution, which shall include inventory control and all aspects of asset disposal pertaining to the on-line auction process, at no additional cost to the County.

C. The Contractor shall be required to work closely with the County representative to coordinate payment and pick-up of assets purchased.

D. The Contractor shall designate a coordinator or representative to be the point of contact regarding any scheduling, planning, site review, or to identify any special requirements during the term of the contract. The County reserves the right to request a replacement of designated representative if it finds that the individual is not responsive.

E. The solution proposed shall at a minimum provide the following:

1. Accept descriptive information concerning an asset including unlimited photos.
2. Allow different auction phases based upon dates and times.
3. Allow the County to set minimum starting prices, bid increments and reserves.

Docusign Envelope ID: F7D66D6B-AE6E-84A9-83B3-D80E6B7A3913

4. Have multiple line items per lot (i.e., computers).
5. Have one asset per listing (i.e., refrigerator).
6. Ability to have multiple lots per auction (150-line items-equipment).
7. Add sales tax (currently at 7%) to the winning bids.
8. List specific times for public viewing and different times for pick-up of the equipment.
9. List multiple locations and complete descriptions including terms of sale.
10. Have multiple starting and ending times.
11. Provide real-time monitoring of the auctions in progress
12. Provide auction detail and summary data, including detailed reporting and records in electronic format.
13. The proposed solution shall have the capability of disallowing (banning) a defaulted buyer from bidding on future surplus.

F. The Contractor shall have a back-up system for emergencies.

G. The Contractor shall have the ability to provide the County with a certificate of sale (Seller's certificate) and the successful buyer with a buyer's certificate.

H. Prior to auction, the successful proposer shall:

1. Provide staff on-site at designated times prior to an auction to record descriptions of lots and obtain digital photographs.
2. Upload the description and photographic documentation to the proposer's website.

I. During the auction processes, the County reserves the right to reject any and all bids.

1. If a dispute arises between two or more bidders, the County may decide the dispute or may immediately put the lot up for sale again and resell to the highest bidder. The decision of the County shall be final and absolute.
2. The successful proposer will not be operating and/or in possession of County's equipment.
3. Bidders may inspect the property prior to bidding; however, they must adhere to the inspection dates and times indicated in the asset description, as established by the County.
4. The Contractor shall generate an electronic bill of sale, appropriately calculating totals to include sales tax, buyer's premium, if applicable, and commission. All surplus items are sold "AS IS – NO WARRANTY – WHEREIS".

J. After the auction the Contractor shall:

Docusign Envelope ID: F7D66D6B-AE6E-84A9-83B3-D80E6B7A3913

1. Have the ability to electronically receive sale proceeds from buyer and communicate same to the County.
2. The Contractor's representative shall contact the County prior to the anticipated pickup to schedule dates, time and route
3. The Contractor shall be fully responsible for all pickup and removal activities of purchased miscellaneous equipment after the sale has been completed.
4. Under no circumstances will the County assume responsibility for any packing, loading or shipping.
5. Upon removal of the property, all sales shall be final, no returns and no exchanges.
6. The Contractor shall have the ability to disperse sale proceeds to the County on a time interval designated by the County.

1.4. TRAINING AND SUPPORT SERVICES

A. The Contractor shall provide training and support services to assist in the implementation of the proposed online auction system, including but not limited to:

1. Familiarization with the nature and operation of the proposed system
2. Guidance in the posting of assets
3. Provide ongoing training and support, either on-site, webinars or via telephone.
4. Procedures for taking and posting pictures of assets

B. Technical Support

1. The Contractor shall provide easily accessible and responsive technical support and customer services.
2. Problems identified either by the County or buyer shall be responded to in writing within forty-eight (48) hours of notification.

C. Auction Reports

1. The Contractor shall maintain an inventory of all items listed for sale.
2. Within no later than ten (10) business days following the auction) and upon request, the Contractor shall provide the County with complete reports of all transactions to include:
    a. Identification of each item sold
    b. Number of bids received

Docusign Envelope ID: F7D66D6B-AE6E-84A9-83B3-D80E6B7A3913

c. Name of the successful buyer including the complete address, phone number, email address,

d. Sale amount on the day of the auction

e. Commission charges and net proceeds

1.5. REBATES

A. Provide information about available rebates the County will receive for auctions.

B. The Contractor shall state proposed percentages, and a description of how such rebates will be calculated and how and when those will be paid to the County.

Docusign Envelope ID: F7D66D6B-AE6E-84A9-83B3-D80E6B7A3913

EXHIBIT E - PRICING

PRICE TABLES

Line Item	Description	Commissions Fee	Percentage
1	Items with sale price less than $5,000	Commissions Fee	0%
2	Items with sale price between $5,001 - $15,000	Commissions Fee	1%
3	Items with sale price over $15,000	Commissions Fee	2%

Line Item	Description	Unit of Measure	Percentage
1	Items with sale price less than $5,000	Buyer's Fee	12.5%
2	Items with sale price between $5,001 - $15,000	Buyer's Fee	12.5%
3	Items with sale price over $15,000	Buyer's Fee	12.5%

Docusign Envelope ID: F7D66D6B-AE6E-84A9-83B3-D80E6B7A3913

ATTACHMENT "B"

INSURANCE REQUIRED – Before execution of the Agreement by the County and commencement of the operations and/or services to be provided, and during the duration of the Agreement, the vendor shall file with the County current certificates of all required insurance on forms acceptable to the County, which shall include the following provisions:

A. All insurance policies shall be issued by companies authorized to do business under the laws of the State of Florida and acceptable to the County.

B. The Certificates shall clearly indicate that the vendor has obtained insurance of the type, amount and classification as required for strict compliance with this insurance section.

C. No material change or cancellation of the insurance shall be effective without thirty (30) days prior written notice to the County.

The vendor shall require and ensure that each of its subcontractors providing services here under (if any) procures and maintains, until the completion of the services, insurance of the types and to the limits specified herein.

Coverage Required – Unless otherwise specified, the Contractor shall, at its sole expense, maintain in effect at all times during the performance of the services insurance coverage with limits not less than those set forth below and with insurers and under forms of policies satisfactory to County.

Coverage

Minimum Amounts and Limits

- Worker's Compensation
  - Statutory requirements at location of Work
- Employer's Liability
  - $ 1,000,000 each occurrence
  - $ 1,000,000 disease, aggregate
  - $ 1,000,000 disease, each employee
- Commercial General Liability
  - $ 2,000,000 General Aggregate
  - $ 2,000,000 Products-Comp. Ops Aggerate
  - $ 1,000,000 Each Occurrence
  - $ 500,000 Fire Damage

Docusign Envelope ID: F7D66D6B-AE6E-84A9-83B3-D80E6B7A3913

- $ 0 Medical Expense

Insurance carrier(s) must have a minimum financial rating of A-.

Coverage shall apply to the indemnity provided to Flagler County and shall include Flagler County its officers and employees, as additional insureds, as regards to liability arising out of the Contractor's performance of the work or the work performed by others on behalf of the Contractor under this Agreement. The insurance afforded to the County shall state that it is primary insurance and shall provide for a severability of interest or cross-liability clause. Prior to entering into the Agreement with the County, the Contractor shall furnish County with Certificates of Insurance (identifying on the face thereof the Project name and Agreement number) as evidence of the above required insurance and such Certificates shall include the following language: Flagler County BOCC as additional insured and an endorsement for which has been issued, subject to a requirement for recurring certificate of insurance every fifteen (15) days from the contract award date until, all obligations under the Contract/Agreement are completed.

Alternatively, in lieu of recurring certificates, the Contractor or vendor may provide a certificate of insurance that contains a provision that coverage afforded under the policies will not be cancelled until at least thirty (30) days prior written notice has been given to the County, except that in the event of cancellation for nonpayment of premium the County shall receive notice as prescribed by state law (10 days). The cancellation clause should read as follows: “Should any of the described policies be canceled or material modified before the expiration date thereof, the issuing company will mail 30 day prior written notice to the certificate holder named below, except that in event of cancellation for nonpayment of premium, the notice shall be 10 days unless a longer time is prescribed by Florida Statute.”

The County will not maintain any insurance on behalf of the Contractor covering loss or damage to the work or to any other property of the Contractor.

None of the requirements contained herein as to types, limits and approval of insurance coverage to be maintained by the Contractor are intended to and shall not in any manner limit or qualify the liabilities or obligations assumed by the Contractor under the Agreement.

The Contractor shall deliver the original Certificate of Insurance and one copy to the agent of the County.

Notices, in original and one copy, of cancellation, termination and alteration of such policies shall also be provided to the agent of the County.

Flagler County Board of County Commissioners
Consent: BOCC Departments / Agenda Item 7.g.

Meeting Date:	October 5, 2026
Department Contact:	Roy Sieger, Airport Director, Shannon Burnett, Procurement Coordinator, Jessica Martin, Procurement Coordinator
Subject:	**Approval of Bid Award 26-ITB-018 to Saboungi Construction, Inc. for the Air Traffic Control Tower Rehabilitation at the Flagler Executive Airport in the amount of $409,970.**

Overview/Summary:
Flagler County Purchasing and AVCON, Inc. collaboratively worked together to formally solicit bids for the Air Traffic Control Tower Rehabilitation. An Invitation to Bid (ITB) was publicly broadcast on OpenGov under 26-ITB-018 requesting submissions from qualified General Contractors for the Air Traffic Control Tower Rehabilitation for the Flagler Executive Airport.

On August 14, 2026, the County received one (1) response as detailed on the attached tabulation sheet. The bid submission was reviewed for conformity to specifications as well as to the terms and conditions outlined within the solicitation documents. Staff recommends awarding the contract to Saboungi Construction, Inc. who submitted a responsive and responsible bid.

Due to the limitations of the project grant funding, all of the bid schedules cannot be awarded at this time. Based on review of the proposal and the availability of funding, Bid Schedule A & E~~F~~ could only be awarded at this time, and Bid Schedules B, C, D, and F~~E~~ will not be awarded as part of the solicitation.

Bid Schedule A = $318,120.00 (100% FAA Grant Funded)
Bid Schedule E = $91,850.00 (100% FAA Grant Funded)
Scaffold Adjust = $10,499.28 (Local Funding)
Total Bid Award = $420,469.28
FAA Grant Award = $489,220.00
Local Share = $21,279.28

Strategic Plan:
Focus Area: Economic Vitality,
Goal 2- Diversify the Tax Base to Improve the Local Economy
Objective EV 2.4: Expand facilities and attract aviation related businesses to the Flagler Executive Airport.

Funding Information:

On August 17, 2026, the BoCC approved the Chair to execute an FAA Grant Offer for $500,000 for the above-mentioned project. The grant was received electronically and required electronic signatures from the Chair and the County Attorney Office. The Chair and the County Attorney both signed the grant on September 9, 2026. The actual grant amount was $489,220, which was less than the requested amount of $500,000. This will require an additional $21,279.28~~$10,780~~ in local contribution.

Recommendations:
Staff recommends that the Board approve Bid Award 26-ITB-018 to Saboungi Construction, Inc. for the Air Traffic Control Tower Rehabilitation at the Flagler Executive Airport in the amount of $409,970, authorize the Chair to execute the contract as approved as to form by the County Attorney.

Attachments:
1. 07 CN - 26-ITB-018 - 1) ATCT Rehabilitation Contract
2. Bid Documents
3. Saboungi Construction, Inc Bid Submission
4. Notice of Intent to Award
5. FAA Grant Agmt re ATCT Rehab exe 09-09-2026
6. Rec Award Ltr re ATCT Rehab
7. Certificate of Insurance
8. ATCTR Contract Adjusmtment Acceptance Letter

FLAGLER COUNTY CONTRACT 26-ITB-018
AIR TRAFFIC CONTROL TOWER REHABILITATION

This Contract, entered into by and between the Flagler County Board of County Commissioners, a political subdivision of the State of Florida, whose address is 1769 East Moody Blvd., Building 2, Bunnell, FL 32110, hereinafter called the **COUNTY**, and Saboungi Construction, Inc., a Florida profit corporation, whose address is 290A North U.S. Highway 1, Ormond Beach, FL 32174, hereinafter called the **CONTRACTOR**.

WITNESSETH: That the **COUNTY** agrees with the **CONTRACTOR**, as follows:

A. The Contract shall consist of the following, all of which are hereby made a part hereof:
    1. COUNTY's 26-ITB-018 Bid Documents, Including Addendum No. 1
    2. CONTRACTOR's 26-ITB-018 Bid Submission
    3. CONTRACTOR's Insurance Certificate(s)
    4. COUNTY's Contract Adjustment Acceptance Letter
B. The **CONTRACTOR** agrees to furnish all labor, equipment, material and the skill necessary for the complete work as set forth in the component parts of the Contract described herein and to the satisfaction of the **COUNTY** or its duly authorized representative.
C. The **COUNTY** agrees to pay the **CONTRACTOR** for the services rendered, in accordance with the pricing structure set forth in the Bid Submission.

[SIGNATURE PAGES TO FOLLOW]

IN WITNESS WHEREOF, the parties hereto have caused this instrument to be executed by their respective officials thereunto duly authorized, on the dates indicated below.

Attest:

_____
Tom Bexley, Clerk of the Circuit Court and Comptroller

FLAGLER COUNTY BOARD OF COUNTY COMMISSIONERS

_____
Adam Mengel, County Administrator

Date:_____

APPROVED-AS-TO-FORM

Sean S. Moylan Digitally signed by Sean S. Moylan Date: 2026.09.21 14:57:19 -04'00'

Sean S. Moylan, Deputy County Attorney

[SIGNATURE PAGE TO FOLLOW.]

ATTEST:

_____
Signature

_____
Print Name, Title

SABOUNGI CONSTRUCTION, INC.

_____
Signature

_____
Print Name, Title

_____
Date

County of Flagler

INVITATION FOR BID

26-ITB-018

AIR TRAFFIC CONTROL TOWER REHABILITATION

RELEASE DATE: July 27, 2026
RESPONSE DEADLINE: August 14, 2026, 10:00 am
Please refer to the project timeline in this document for all important deadlines.

Table Of Contents

1. Advertisement
2. Instructions to Bidders
3. Submittal Forms
4. Contract Execution
5. Standard Terms & Conditions
6. Standard General Conditions
7. Pricing Proposal
8. Attachments/Exhibits

Attachments:

A - Project_Forms

B - Contract_Form

C - Example_Payment_and_Performance_Bond_Form_337_18_Version_May_6_2014_doc

D - PO Standard Terms and Conditions

E - 26-ITB-018_FIN_ATCT Rehab_Abbreviated Design Criteria Package

F - 26-ITB-018_FIN_ATCT Rehab_Project Manual_Technical Specifications

G - 26-ITB-018_FIN_ATCT Rehab_Bid Drawings_SS

1. Advertisement

FLAGLER COUNTY

ADVERTISEMENT FOR BIDS

FOR

Air Traffic Control Tower Rehabilitation

Sealed bids for furnishing all labor, materials, equipment and supervision to complete the Air Traffic Control Tower Rehabilitation project in conformance with the design criteria package and contract documents.

The Vendor response with the lowest responsible, qualified bid would be the basis of award for the project.

Bidders shall be prequalified by the Florida Department of Transportation (FDOT) in order to be eligible to bid. All prequalified Contractors submitting a bid must include with their bid proposal a copy of their FDOT Certificate of Qualification.

A Non-Mandatory Pre-Bid Meeting for all interested parties will be held on Friday, July 31, 2026 at 10:00 am in the Flagler Executive Airport Administration office located at:

Airport Administration Building - 201 Airport Rd, Palm Coast, FL 32164

Although the Pre-Bid Meeting is not mandatory, it will offer potential bidders the only opportunity to ask questions and discuss the project directly with staff.

Interested Bidders may secure proposal documents and all other pertinent information by visiting the website of OpenGOV at www.procurementopengov.com/signup .

Interested firms are to submit a proposal to provide this service and/or product(s), please provide the requested information in this solicitation, complete the included forms, and submit these documents with your response through OpenGov Procurement, at https://procurement.opengov.com/portal/flaglercounty by the date and time posted.

Bids must be accompanied by a certified check, bank draft, or satisfactory Bid Bond, drawn in the favor of Flagler County in the amount of five percent (5%) of the total bid as shown on the Bid Form. No Bidder may withdraw his Bid after the scheduled closing time for receipt of Bids. All Bids must be firm for a period of ninety (90) days after the time set for opening Bids.

No person or affiliate who has been placed on the convicted vendors list following a conviction for a public entity crime may submit a Bid for a period of 36 months from the date of being placed on the convicted vendor list.

The successful Bidder will be required to furnish and pay for satisfactory Contract Bonds (Performance and Payment) and appropriate Warranty Bond.

Upon award of contract, a Certificate of Insurance must be provided indicating compliance with the criteria and for the coverage(s) in the Standard Terms and Conditions of the Agreement between the County and the selected Contractor.

Interested firms are to submit bids through OpenGov Procurement at **https://procurement.opengov.com/portal/flaglercounty.** Bids must be received on or before 10:00 am**, Friday, August 14, 2026,** after which time they will be publicly opened via Opengov and read aloud.

Bids received after the specified date and time will not be accepted. **Mailed, Faxed or E-mailed Bids will not be accepted.**

Flagler County reserves the right to reject any and all Bids, to award all or segments of the project and to waive any informality in Bids received, as may be in the best interest of the County.

NOTICE TO BIDDERS/PROPOSERS

To ensure that your Bid is responsive, you are urged to request clarification or guidance on any issues involving this solicitation before submission of your response. Your point-of-contact for this solicitation is purchasing@flaglercounty.gov

2. Instructions to Bidders

1. DEFINITION OF TERMS

Where the following terms, or their pronouns, occur herein, the intent and meaning shall be as follows:

OWNER: Flagler County Board of County Commissioners

ENGINEER: County Engineer or designee,

1769 E. Moody Boulevard, Building 2

Bunnell, FL 32110

CONTRACT: The agreement executed by the Owner and Contractor for the performance of work and the other documents (plans, specifications, notice to Bidders, proposal, surety bonds, addenda and other documents) whether attached thereto or not.

SURETY: Any person, firm or corporation which is bound by Public Construction Bond and Payment Bond with and for the Contractor and which engages to be responsible for his acceptable performance of the work and for payment of all debts pertaining thereto.

2. PREPARATION OF BID

To Ensure Acceptance of Your Bid, Please Follow These Instructions:

(a) All Bid Sheets including this form must be executed and submitted electronically through OpenGov Procurement, at https://procurement.opengov.com/portal/flaglercounty by the date and time posted.

Bid must be typed or printed in ink. All corrections made by the Bidder prior to the opening must be initialed and dated by the Bidder. No changes or corrections will be allowed after Bids are opened.

(b) Bid must contain a manual signature of an authorized representative of the company.

(c) The Bid opening shall be public on the date and time specified on the Bid. It is the Bidder's responsibility to assure that the Bid is delivered at the proper time. OpenGov will automatically close bid submissions at the deadline, and no bids will be accepted thereafter.

(d) Bidders shall examine the Contract Documents, delivery schedule, Bid prices and all general and special conditions of the Bid prior to submission and agree that submittal of a bid for the work is prime facie evidence he (they) have conducted such examinations.

(e) Bid must be accompanied by a Bid Bond in the amount specified in the Advertisement for Bids, the Instructions to Bidders, or the Bid Bond form.

(f) Bids must be accompanied by a certified check, bank draft, or satisfactory Bid Bond, drawn in the favor of Flagler County in the amount of five percent (5%) of the total bid as shown on the Bid Form. No Bidder may withdraw his Bid after the scheduled closing time for receipt of Bids. All Bids must be firm for a period of ninety (90) days after the time set for opening Bids.

(g) Bidders shall submit a list of subcontractors and major material suppliers to be used if awarded via the County Bid Submittal forms provided in the contract. A copy of the form is provided in the Bid Documents and shall be attached to the Bidder's Proposal. Such listing shall include the name of each subcontractor where the work exceeds five percent (5%) of the Contract Price. If no subcontractors are required, so state thereon.

Upon request by the Engineer, the successful Bidder shall submit, within seven (7) calendar days thereafter, all data required to establish to the satisfaction of the Engineer and Owner, the reliability and responsibility of the proposed subcontractors to furnish and perform the work described in the Sections of the Specifications pertaining to such proposed subcontractor's respective trades.

Prior to the award of the Contract, the Engineer will notify the Bidder, after due investigation, if Owner has reasonable and substantial objection to any person or organization proposed as a subcontractor. The Bidder then may submit an acceptable substitute at no increase in Bid price. If the Bidder fails to submit an acceptable substitute within seven (7) days of the original notification, the Owner then may, at his option, disqualify the Bidder, at no cost to the Owner, and award the contract to the next lowest Bidder that proposes to use acceptable subcontractors, suppliers and other persons and organizations. The declining to make requested substitutions will not constitute grounds for sacrificing the Bid security of any Bidder.

Subcontractors and other persons and organizations proposed by the Bidder and accepted by the Owner and the Engineer must be used on the work for which they were proposed and accepted and shall not be changed without approval of the Owner and the Engineer.

(h) The successful Bidder will be required to furnish and pay for satisfactory Contract Bonds (Performance and Payment) and a one-year Warranty Bond, unless specified otherwise.

(i) Upon award of a contract a Certificate of Insurance indicating that the coverage(s) identified in the Standard Terms and Conditions of the Contract Documents are in effect must also be provided. Such certification shall stipulate the County and the City of Bunnell are listed as an additionally insured and meet all other identified criteria.

(j) Interested firms are to submit a proposal to provide this service and/or product(s), please provide the requested information in this solicitation, complete the included forms, and submit these documents with your response through OpenGov Procurement, at https://procurement.opengov.com/portal/flaglercounty by the date and time posted. A bid bond in the amount of 5% must be included with your bid submittal. Bids must be received on or before Friday, August 14, 2026 at 10:00 am. The submission of responses prior to the specified date and time is solely and strictly the responsibility of the Proposer. Responses received after the posted date and time will not be considered. Additional information may be submitted with the response. No offer may be modified after acceptance. Terms and conditions differing from those in this solicitation may be cause for disqualification of the Response. Failure to provide the required information may result in the Response not being considered.

3. PRE-BID MEETING:.

A Non-Mandatory Pre-Bid Meeting for all interested parties will be held o-n Friday, July 31, 2026 at 10:00 am in the Flagler County Government Services Building, Building No. 2, 1769 E. Moody Blvd., 3rd Floor Engineering

Department Conference Room Bunnell, FL 32110. Although the Pre-Bid Meeting is not mandatory, it will offer potential bidders the only opportunity to ask questions and discuss the project directly with staff.

4. BID DEADLINE:

Bid must be submitted no later than the time and date given in the Advertisement For Bids or subsequent Addenda thereto.

Bids will be received at 10:00 am after which time they will be publicly opened and read aloud. Bids received after the specified date and time will not be accepted. Only bids submitted electronically through OpenGov will be accepted. Couriered, mailed or faxed bids will not be considered.

5. TIMETABLE:

Date of Distribution: Monday, July 27, 2026

Non-Mandatory Pre-Bid Meeting: Friday, July 31, 2026, 10:00 am at Airport Administration Building - 201 Airport Rd, Palm Coast, FL 32164

Last Date for Questions: Tuesday, August 4, 2026, 5:00 pm

Final Addendum Issued by: August 6th, 2026

Bids Due and Opening: Friday, August 14, 2026, 10:00 am

6. QUESTIONS REGARDING SPECIFICATIONS OR BIDDING PROCESS:

1. To ensure fair consideration for all bidders, the County prohibits communication to or with any department, division or employee during the bid process, except as provided below.

2. All questions or inquiries relative to interpretation of specifications or the bid process shall be addressed in writing as indicated below and must be received by the Last Date of Inquiries as indicated in the Timetable advised under the Overview. Inquiries after this date may not be given consideration. Any interpretation made to prospective bidders will be expressed in the form of a written addendum which, if issued, will be sent to all prospective bidders no later than seven (7) calendar days before the date set for receipt of the bids. Oral answers will not be authoritative.

3. It will be the responsibility of the bidder to contact the Purchasing Department prior to submitting a bid to ascertain if any addenda have been issued, to obtain all such addenda, and return executed addenda with the bid.

4. All questions or concerns related to this solicitation must be submitted in writing and directed exclusively to the Flagler County Office of Procurement and Contracts. Questions should be submitted through the Questions & Answers section on OpenGov.

7. COMMUNICATION

There shall be no communications between the Vendor, their employees or subcontractors concerning this project to anyone within the Flagler County BOCC, including but not limited to, all County employees and

elected officials (hereafter referred to as "County Representative"), except through the Purchasing Department.

Any attempt to communicate with any County Representative outside the Purchasing Department will be considered a violation of the Purchasing Policy and may result in the removal of your company from the bidders list for this project, and/or removal or suspension of your company from future bidders lists.

8. EXPLANATION TO BIDDERS:

Each Bidder shall examine the Bidding Documents carefully; he shall make a written request through OpenGov under the Questions & Answers section to the County for interpretations or corrections of any ambiguity, inconsistency or error, which he may discover. All interpretations or corrections will be issued as addenda. The County will not be responsible for oral clarifications.

No negotiations, decisions or actions can be relied on by the Bidder as a result of any oral discussions with any County employee prior to the opening of proposals. Only those communications, which are in writing from the County, may be considered as a duly authorized expression on behalf of the County. Also, only written and signed communications from Bidders will be recognized by the County as duly authorized expressions on behalf of Bidders.

9. MANUFACTURERS' NAME AND APPROVED EQUIVALENTS:

Manufacturers' names, trade names, brand names, information and/or catalog numbers listed in a specification are for information and not intended to limit competition. The Bidder may offer any brand for which he is an authorized representative, which meets or exceeds the specifications for any item(s). If Bids are based on equivalent products, indicate on the Bid Form the manufacturers' name and catalog number. Bidder shall submit with his Bid, cuts, sketches, and descriptive literature and/or specifications. The Bidder should also explain in detail the reasons(s) why and submit proof that the proposed equivalent will meet the specifications and not be considered an exception thereto. Flagler County reserves the right to be the sole judge of what is equal and acceptable. Bids, which do not comply with these requirements, are subject to rejection. If Bidder fails to name a substitute, it will be assumed that he is bidding on, and he will be required to furnish goods identical to the Bid standard.

10. ADDITIONAL TERMS AND CONDITIONS:

The County of Flagler reserves the right to reject Bids containing any additional terms or conditions not specifically requested in the original conditions and specifications.

11. TAXES:

The County of Flagler is exempt from Federal Excise Taxes and all Sales Taxes.

12. LIABILITY:

The Contractor shall hold and save the City of Bunnell and the County of Flagler, their officers, agents, and employees harmless against claims by third parties resulting from the Contractor's breach of Contract or the Contractor's negligence.

13. LICENSES:

The Contractor shall be responsible for obtaining and maintaining his City and County occupational license and any licenses required pursuant to the laws of Flagler County or the State of Florida.

14. PUBLIC ENTITY CRIMES STATEMENT:

Bidders must complete and return with Bid/Proposal the Sworn Statement to Public Entity Crimes pursuant to Section 287.133(3)(a), Florida Statutes.

15. PREPARATION AND SUBMISSION OF BID:

Each Bidder shall submit Bid Prices on this documentation in the proper spaces and substitutions on which he Bids. Any erasures or other corrections in the Bid must be explained or noted over the signature of the Bidder. Bids containing any conditions or irregularities of any kind may be rejected by Flagler County. It is the intention of the County to award this Bid based on the low total Bid price meeting all Contract Document Requirements.

16. PENALTIES:

BIDS MAY BE REJECTED AND/OR BIDDERS DISQUALIFIED FOR THE FOLLOWING REASONS:

1. Consistent failure to respond to Bid invitation for three (3) consecutive instances.

2. Failure to update the information on file including address, product, service or business descriptions.

3. Failure to perform according to Contract provisions.

4. Conviction in a court of law of any criminal offense in connection with the conduct of business.

5. Evidence of a violation of any Federal or State anti-trust law based on the submission of Bids or proposals, or the awarding of Contracts.

6. Evidence that the vendor has attempted to give a Board employee a gratuity of any kind for the purpose of influencing a recommendation or decision in connection with any part of the Board's purchasing activity.

7. Any entity or affiliate who has been placed on the discriminatory vendor list may not submit a bid.

8. Other reasons deemed appropriate by the Board of County Commissioners.

17. WITHDRAWAL OF BIDS:

Bids may be withdrawn by written or orally verified telegraphic request received from Bidders prior to the time fixed for opening. Negligence on the part of the Bidder in preparing the Bid confers no right for the withdrawal of the Bid after it has been opened. Faxed withdrawals will not be recognized.

18. RECEIPT AND OPENING OF BIDS:

Bids will be opened by unsealing bid submissions via OpenGov at the date and time specified in the Invitation to Bid. The OpenGov system will automatically close the ITB at the deadline, and no late submissions will be

accepted. At the time of opening, bid results will be published and made available online for the information of bidders and interested parties. It is the bidder's responsibility to ensure their submission is properly uploaded and finalized within the portal prior to the bid submission deadline.

The Bidder agrees that this Bid shall be good and may not be withdrawn for a period of ninety (90) calendar days after the scheduled closing time for receiving Bids.

19. REJECTION OF BIDS/PROPOSALS:

The County reserves the right to reject any and/or all Bids when such rejection is in the best interest of the County.

20. AWARD OF BIDS:

The Bid will be awarded as soon as possible to the lowest responsible Bidder.

21. BID CHALLENGE:

Any Bid award recommendation may be challenged administratively on the grounds of irregularities in the Bid procedure, or the evaluation of the Bid. Such notice of intent of Bid challenge shall be made in writing to the County within seventy-two (72) hours after receipt of the intended recommendation of award and challenger shall file a formal written Bid challenge within five (5) days after the date in which the notice of intent of Bid challenge has been submitted. Failure to file a notice of intent of Bid challenge or failure to file a formal written Bid challenge shall constitute a waiver of all administrative rights granted under this section.

At the time fixed for the opening Bids, the contents of the Bid Form will be made public for the information of Bidders and other interested parties, who may be present either in person or by representatives. This section confers no judicially enforceable rights. Its sole purpose is to give unsuccessful Bidders a formalized opportunity to complain about the process.

22. CANCELLATION:

The Contract with the successful Bidder may be terminated by the County without cause by giving a minimum of thirty (30) days written notice of intent to terminate. Contract prices must be maintained until the end of the thirty (30) day period. The County may terminate the Contract at any time as a result of the Contractor's failure to perform in accordance with these specifications and applicable Contract. The County may retain/withhold payment for nonperformance if deemed appropriate to do so by the County.

23. DISPUTES:

The Contract Agreement for this project will be conditioned on venue for any disputes being in the Seventh Judicial Circuit in and for Flagler County.

The Board of County Commissioners, Flagler County, reserves the right to reject any or all proposals, to waive informalities, and to accept all or any part of any proposals as may be deemed to be in the best interest of the County.

Final payment for items of work will be based on items actually completed, accepted and in place at the conclusion of the project.

Bids may be considered irregular and subject to rejection if they show serious omission, unauthorized alterations of form, unauthorized alternate Bids, incomplete or unbalanced Bids, or irregularities of any kind.

Only one (1) Bid from any individual, firm, partnership or corporation, under the same or different names, will be considered. Should it appear to the Owner that any Bidder is interested in more than one Bid for the work contemplated, all Bids in which such Bidder is interested will be rejected.

If the Bid is made by an individual in his own proper person or under a trade or firm name, he shall execute the same under this individual signature and his post office address shall be shown. If made by a co-partnership, the Bid shall be executed for the co-partnership by setting out in full, the names of the partners and the firm name of the partnership, if any, and signed by one or more of the partners and the post office address of each of the partners shall be shown. If made by a corporation, the Bid shall be executed by setting out the corporation name in full, followed by a statement that it is incorporated and existing under the laws of the named state, and if it is a foreign corporation, the fact that it is authorized and permitted to transact business in this State, and by being signed by its president or other authorized corporate officer, with its corporate seal affixed and attested by its secretary, and the address of its principal place of business shall be shown.

24. BID SECURITY:

Each Bid must be accompanied by a certified check, cashier's check, or Bid bond payable to the Owner for an amount equal to at least five percent (5%) of the amount of Bid. The Owner will, within ten (10) days after the opening of the Bids, return the deposit of all Bidders except those posted by the three lowest acceptable Bidders, whose deposit will be returned upon the final award and execution of the Contract between the successful Bidder and Owner, and after a satisfactory Public Construction Bond and Payment Bond have been executed.

25. COMPETENCY OF BIDDERS:

The Owner reserves the right to make such investigations as he may deem necessary to establish the competency and financial ability of any Bidder to perform the work; and if after investigation, the evidence of his competency or financial ability is not satisfactory, the Owner reserves the right to reject his Bid.

26. CONSIDERATION OF BIDS AND AWARD OF CONTRACT:

If the Contract is awarded, the Owner will accept the Bid and award the Contract to the successful Bidder, by written notice, within ninety (90) days after the opening of Bids.

Upon determination by the Board of County Commissioners, failure on the part of the successful Bidder to execute a Contract and file an acceptable bond within ten (10) days from the notice of acceptance shall be just cause for annulment of the award and the forfeiture of the Bid security or a portion thereof. The Owner may then accept the Bid of the next lowest responsible Bidder or re-advertise for Bids. If the Bid of the next lowest Bidder is accepted, the acceptance shall bind such Bidder as though he were the original successful Bidder.

The Owner reserves the right to increase the extent of the project at the same unit or lump sum prices as Bid, but such increase in quantities shall not exceed twenty percent (20%) of the original Bid unless agreed to by both the Owner and Bidder.

The Owner reserves the right to reject any or all Bids and to waive informalities or to accept any Bid or combination of Bids which, in the Owners judgment, will best serve his interest.

27. CONTRACT SECURITY:

The Contractor shall furnish a Public Construction Bond, Payment Bond and appropriate Warranty Bond in a penal sum of at least 100% of the amount of the Contract as awarded, as security for faithful performance of the Contract, and for the payment of all persons, firms or corporations to whom the Contractor may become legally indebted for labor, materials, tools, equipment or services of any nature employed or used by him in performing the work. Such bonds shall be in the form of bond furnished and shall bear the same date as the Contract, or a date subsequent to the date of the Contract. The surety on such bonds shall be duly authorized and nationally recognized surety company satisfactory to the Owner. In the event the Contract price is increased by Contract Amendment, the value of the bonds shall be increased to an amount equal to 100% of the amended Contract price.

28. CONSTRUCTION PLANS AND SPECIFICATIONS:

The Construction Plans, Specifications and all supplementary documents are essential parts of the Contract Documents and requirements occurring in one are considered as occurring in all. They are intended to be cooperative, to describe and provide for the construction of a complete unit or group of units, ready for operation. In case of discrepancy computed dimensions shall govern over scaled dimensions, plans and special provisions shall govern over standard specifications.

29. CONSTRUCTION CONDITIONS:

All of the conditions which are known to affect the performance of the work have been shown on the plans and/or described elsewhere in other areas of the Contract Documents, but the Owner makes no representation that the condition as shown or described are the conditions that will be found in the field when actual construction is undertaken. It will be the Bidder's responsibility to examine the Specifications and related documents as well as the site of the work to determine, to his satisfaction, the surface and subsurface conditions related to the construction contemplated; and failure to do so will not relieve the Contractor of complete and satisfactory performance under this Contract.

30. LAWS AND REGULATIONS:

The Bidder's attention is directed to the fact that all applicable local, state, and Federal laws and the rules and regulations of all authorities having jurisdiction over construction of the project shall apply to the Contract throughout and they will be deemed to be included in the Contract Documents the same as though herein written out in full.

31. FLORIDA PROMPT PAYMENT ACT:

Payments shall be in accordance with Part VII of Ch. 218, Florida Statutes, the “Local Government Prompt Payment Act.”

3. Submittal Forms

1. Bidders Checklist*

Please download the below documents, complete, and upload.

- Bidders_Check_List.pdf

*Response required

2. Bid Bond

*2.1. Bid Bond**

Please download the below documents, complete, and upload.

- Bid_Bond_Form.pdf

*Response required

3. Forms/Documentation

*3.1. Bid Submittal Form**

Please download the below documents, complete, and upload.

- Bid_Form.pdf

*Response required

*3.2. Affidavit of Non-Collusion**

Please download the below documents, complete, and upload.

- AFFIDAVIT_OF_NON-COLLUSION_...

*Response required

*3.3. Human Trafficking Attestation Pursuant to Section 787.06, Florida Statutes**

Download the attached form, complete, and upload completed form.

- Anti-Human_Trafficking_Affi...

*Response required

*3.4. Certification of Compliance with Florida Trench Safety Act**

Please download the below documents, complete, and upload.

- CERTIFICATION_OF_COMPLIANCE...

*Response required

*3.5. Drug-Free Workplace**

Please download the below documents, complete, and upload.

- DRUG_FREE_WORKPLACE_CERTIFI...

*Response required

*3.6. E-Verify Acknowledgement**

Please download the below documents, complete, and upload.

- E-Verify_Acknowledgement_.pdf

*Response required

3.7. List of Proposed Subcontractors

Please download the below documents, complete, and upload.

- LIST_OF_PROPOSED_SUBCONTRAC...

*3.8. Sworn Statement Pursuant to Section 287.133 FS Public Entity Crimes**

Please download the below documents, complete, and upload.

- SWORN_STATEMENT_PURSUANT_TO...

*Response required

*3.9. W-9**

Please attach current W-9 Form

*Response required

*3.10. Vendor Information Form**

Please download the below documents, complete, and upload.

- VENDOR_INFORMATION_.pdf

*Response required

*3.11. Proof of Insurance **

Please provide Proof of Insurance - evidence of required insurance coverage or proof of insurability in the amounts indicated. If available, a properly completed ACORD Form is preferable. Upon award, final forms must contain the correct solicitation and/or project number and Flagler County contact person.

Firms that have owner/operators that have filed a "Notice of Election to be Exempt" shall submit a copy with the response

*Response required

4. Acknowlegements

*4.1. Registration on SAM.gov**

For any federally funded project, bidder agrees to register on SAM.gov if awarded a contract under this solicitation.

☐ Yes
☐ No

*Response required

When equals "Yes"

*4.1.1. Please provide your UEI#**

*Response required

*4.2. Registration on Sunbiz.org**

☐ Yes
☐ No

*Response required

When equals "Yes"

*4.2.1. Please provide your Sunbiz.org Document Number**

*Response required

When equals "Yes"

*4.2.2. Please upload your Sunbiz.org certificate.**

*Response required

4. Contract Execution

CONTRACT
FOR
Air Traffic Control Tower Rehabilitation

This Contract, entered into this _____ day of _____, 20___ by and between the Flagler County Board of County Commissioners, hereinafter called the **COUNTY**, and _____ , hereinafter called the **CONTRACTOR**.

WITNESSETH: That the **COUNTY** agrees with the **CONTRACTOR**, as follows:

1. The Contract shall consist of the following, all of which are hereby made a part thereof:
    1. Advertisement for Bids, Instructions to Bidders, Bidders Check List, Standard General Conditions, Standard Terms and Conditions and the Bid with any accompanying documents.
    2. Plans and Specifications, Special Provisions, Technical Specifications, Project Permits, any Addendum (No. __) or other information provided to the prospective bidders prior to receipt of bids.
    3. Bid Bond and Payment and Performance Bond
    4. Insurance Certificate(s)
    5. Project Forms

2. The **CONTRACTOR** agrees to furnish all labor, equipment, material and the skill necessary for the complete work as set forth in the component parts of the Contract, now on file in the Office of the Clerk of the Circuit Court at the Flagler Courthouse, Bunnell, Florida, described herein and to the satisfaction of the **COUNTY** or its duly authorized representative.

3. The **CONTRACTOR** agrees to commence the work to be done under this Contract on the date to be specified in the Notice to Proceed and fully complete all work hereunder within Two Hundred Forty (240) calendar days from the date set forth in the Notice-to-Proceed as completion date.

4. The **COUNTY** agrees to pay the **CONTRACTOR** for the faithful performance under this Contract the approximate amount of _____ ($_____) based on the estimated quantities and unit or lump sum prices contained herein and subject to additions or deductions as herein provided.

ATTEST: **FLAGLER COUNTY BOARD OF COUNTY COMMISSIONERS**

_____ _____

Tom Bexley, Clerk of the Circuit Court and Comptroller **Chair**

APPROVED–AS-TO-FORM

_____

Sean Moylan, Deputy County Attorney

ATTEST: **CONTRACTOR:**

BY:_____ **BY:** _____

(Signature) **(Signature)**

_____ _____

(Typed or Printed Name) **(Typed or Printed Name)**

_____ _____

(Title) **(Title)**

CORPORATE SEAL:

5. Standard Terms & Conditions

The following terms and conditions shall apply to the Contract, Agreement, Bid or Quote with Flagler County. The following shall prevail over any inconsistent provisions of the Contract, Agreement, Bid or Quote.

1. Late payments of any sum due by Flagler County shall be in accordance with the Florida Prompt Payment Act applicable to local governments.

2. This Agreement shall be construed under the laws of the State of Florida, except its conflict of laws provisions, and venue for any disputes shall be in 7th Judicial Circuit in and for Flagler County, Florida. If any provision of this Agreement is in conflict with any applicable statutes, rule or ordinance, or is otherwise unenforceable, then such provision shall be deemed null and void to extent of such conflict, and shall be deemed severable, but shall not invalidate any other provision of this Agreement.

3. If the vendor is contracted to provide products, such products shall be free of all liens, claims or encumbrances, and the vendor warrants that is has clear title to the products being delivered.

4. If the vendor is contracted to provide services, such services shall be fully satisfactory to the County as determined by the County.

5. The County retains the right to reject any product or service with which it is not completely satisfied and may in such situations withhold payment until the product or service is made acceptable, or may reduce the amount it owes under the Contract, Agreement, Bid or Quote, or may rescind the Contract Agreement, Bid or Quote.

6. The vendor shall provide the County with any data, reports or other information as required and requested by the County to enable it to utilize the product or service furnished by the vendor. At the convenience of and at no expense to Flagler County, the vendor may be required to provide training to County employees in the operation and maintenance of any item purchased unless otherwise specified.

7. In furnishing the service or product to the County, the vendor shall comply with all Federal, State, and County laws, rules, regulations and codes and their successors or amendments. Violation of such laws, rules, regulations, and codes may be grounds for delaying or reducing the amount due, or in rescinding the Contract, Agreement, Bid or Quote.

8. The vendor shall hold the County harmless from all claims, damages, costs, including reasonable attorneys fees, expert witness fees, consultant fees and litigation expenses, arising out of the vendor's delivery of the product or service to the County for any negligent acts, errors, or omissions by the vendor, its employees or its agents. The parties to the Agreement hereby acknowledge that specific consideration has been given for this indemnity clause. To conform with F.S.725.06 in the event the Contract, Agreement, Bid or Quote involves a construction project within the meaning of the statute, the County is providing a specific consideration to the vendor of one dollar ($1.00) paid in hand, which vendor hereby accepts as fulfilling the obligations of the statute. The obligations of this paragraph shall survive the acceptance of any goods and/or performance, and payment therefore by the County.

9. Flagler County is obligated only to the extent that funds are included in the County's fiscal year and/or capital budget. Should the County not include funds for this expense the Agreement is null and void.

10. Flagler County does not award publicly funded Contracts to those who knowingly employ unauthorized alien workers in violation of section 274A of the Immigration and Naturalization Act. 8 United States Code §1324(a). Such employment deprives legal workers of job opportunities. Violation of section 274A shall be grounds for unilateral cancellation of the Contract, Agreement, Bid or Quote for purchase of services and goods by Flagler County.

11. The vendor will not discriminate against any employee in the performance of this Agreement, or against any applicant for employment, because of race, creed, color, handicap, national origin, or gender.

12. No waiver by the County for any right or remedy granted hereunder and no failure by the County to insist on strict performance shall affect or extent or act as a waiver of any other right or remedy of the County hereunder, nor shall it affect the subsequent exercise of the same right or remedy by the County for any further or subsequent default by the vendor.

13. Upon the award of a Bid, the County shall require evidence that the vendor's operations are covered by personal injury insurance, property damage liability insurance, worker's compensation insurance, and/or insurance coverage as follows:

INSURANCE: Unless otherwise specified, the Contractor shall, at its sole expense, maintain in effect at all times during the performance of the services insurance coverage with limits not less than those set forth below and with insurers and under forms of policies satisfactory to County.

Coverage	Minimum Amounts and Limits
(a) Worker's Compensation	Statutory requirements at location of work*
Employer's Liability	$ 1,000,000 Each Occurrence
	$ 1,000,000 Disease, Aggregate
	$ 1,000,000 Disease, Each Employee
(b) Commercial General Liability	$ 5,000,000 Annual General Aggregate
	$ 5,000,000 Products-Comp. Ops Aggregate
	$ 2,000,000 Each Occurrence
	$ 1,000,000 Fire Damage
	$ 5,000 Medical Expense
(c) Automobile Liability	$1,000,000 Combined Single Limit (owned, hired and non-owned)
Option of Split Limits:	

(1.) Bodily Injury	$ 1,000,000 Per Person
	$ 1,000,000 Per Accident
	$ 2,000,000 General Aggregate
(2.) Property Damage	$ 1,000,000 Each Occurrence
	$ 2,000,000 General Aggregate
(d) Professional Liability	$1,000,000 Per Claim
(when applicable)	$1,000,000 Annual Aggregate

(e) Builder's Risk/Installation Floater (If over $25,000) with a Deductible of $10,000 or less.

Roadways/Buildings	100% of Completed Value
Machinery/Equipment	100% of Value

*Note: If the Contractor is using "leased employees" or employees obtained through professional employer organizations ("PEO's"), proof shall be provided to ensure that such employees are covered by Worker's Compensation insurance through the PEO's or other leasing entity/ies. Proof shall also be provided to ensure that any equipment rental agreements that include operators or other personnel who are employees of independent contractors, sole proprietorships or partners are covered by insurance required under Florida's Workers' Compensation law.

Insurance carrier(s) must have a minimum financial rating of A-.

Coverage shall apply to the indemnity provided to the Florida Department of Transportation, the County, and shall include the Department and Flagler County as additional insureds, as regards to liability arising out of Contractor's performance of the work or the work performed by others on behalf of Contractor under this Contract. The insurance afforded to the Department and the County shall state that it is primary insurance and shall provide for a severability of interest or cross-liability clause. Prior to entering into the Contract with the County, Contractor shall furnish County with Certificates of Insurance (identifying on the face thereof the Project name and Contract number) as evidence of the above required insurance and such Certificates shall include the following language: Florida Department of Transportation and Flagler County as additional insured and an endorsement for which has been issued, subject to a requirement for recurring certificate of insurance every fifteen (15) days from the contract award date until all obligations under the Contract/Agreement are completed.

Alternatively, in lieu of recurring certificates, the contractor or vendor may provide a certificate of insurance that contains a provision that coverage afforded under the policies will not be cancelled until at least thirty (30) days prior written notice has been given to the County, except that in the event of cancellation for nonpayment of premium the County shall receive notice as prescribed by state law (ten (10) days). The cancellation clause should read as follows: "Should any of the described policies be canceled or materially modified before the expiration date thereof, the issuing company will mail thirty (30) days prior written notice

to the certificate holder named below, except that in event of cancellation for nonpayment of premium, the notice shall then be ten (10) days unless a longer time is prescribed by Florida Statutes."

In addition, the Contractor and its subcontractors shall carry Commercial General Liability insurance providing continuous coverage for all work or operations performed under this agreement. Such insurance shall be no more restrictive than that provided by the latest occurrence form edition of the standard Commercial General Liability Coverage Form (ISO Form CG 00 01) as filed for use in the State of Florida. The State of Florida Department of Transportation to be made an Additional Insured as to such insurance. Such insurance shall be on an "occurrence" basis and shall include Products/Completed Operations coverage. The Coverage afforded the Department of Transportation and Flagler County as an Additional Insured shall be primary as to any other available insurance and shall not be less than $1,000,000 for each occurrence and not less than a $5,000,000 annual general aggregate, inclusive of amounts provided by an umbrella or excess policy. The limits of coverage described herein shall apply fully to the work or operations performed under this Agreement and may not be shared with or diminished by claims unrelated to the Agreement. The policy/ies and coverage described herein may be subject to a deductible and such deductibles shall be paid by the Named Insured. No policy/ies or coverage described herein may contain or be subject to a Retention or a Self-Insured Retention. Prior to the execution of this Agreement, and at all renewal periods which occur prior to final acceptance of the work, the Department of Transportation and Flagler County shall be provided with an ACORD Certificate of Liability Insurance reflecting the coverage described herein.

The COUNTY will not maintain any insurance on behalf of Contractor covering loss or damage to the work or to any other property of Contractor.

None of the requirements contained herein as to types, limits and approval of insurance coverage to be maintained by Contractor are intended to and shall not in any manner limit or qualify the liabilities or obligations assumed by Contractor under the Contract.

Contractor shall deliver the original Certificate of Insurance and one copy to the agent of the COUNTY. Notices, in original and one copy of cancellation, termination and alteration of such policies shall also be provided to the agent of the COUNTY.

14. Where required by the County, the vendor shall furnish a satisfactory performance and payment bond within thirty (30) calendar days after notification of the Bid award, unless a different time is agreed upon or specified by the County. Failure to furnish a bond within the required period shall be cause for rejection of the Bid and Bid deposit may be retained by the County as payment for damages.

15. No Contract, Agreement, Bid or Quote, nor any part thereof, shall be assigned or delegated without the County's advance written consent. Such consent shall neither relieve the vendor from its obligations nor change the terms of the Agreement. If the County consents to assignment, the vendor agrees to include in the subcontract a provision that the subcontractor shall hold the Florida Department of Transportation and Flagler County harmless against all claims of whatever nature arising out of the subcontractor's performance of work.

16. Insofar as this Agreement may delegate governmental or legislative functions to a private entity, and the private entity would be subject to public records laws codified in Chapter 119, Florida Statutes, and the public meeting requirements codified in Chapter 286, Florida Statutes, the vendor acknowledges familiarity

with the above-referenced statutes and agrees to comply with the same unless the public records are specifically exempted or the meeting is specifically not subject to the provisions of Chapter 286, Florida Statutes. The County may unilaterally cancel this Agreement for any improper refusal by provider to hold a meeting or provide public access to public records as required by Chapter 119, Florida Statutes, made or received by the provider in conjunction with this Agreement.

17. The Contractor and any subcontractors shall comply with all Federal, State, County, and City laws, rules, regulations and codes applicable and all terms and conditions of the State of Florida Department of Transportation State-Funded Grant Agreement applicable to this Project.

6. Standard General Conditions

ARTICLE 1 -DEFINITIONS

Wherever used in these General Conditions or in the other Contract Documents, the following terms have the meanings indicated which are applicable to both the singular and plural thereof:

Addenda: Written or graphic instruments issued prior to the opening of Bids, which clarify, correct, or change the Bidding Documents or the Contract Documents.

Agreement: The written Agreement between COUNTY and CONTRACTOR covering the Work to be performed; other Contract Documents are attached to the Agreement and made a part thereof as provided therein.

Agreement Amendment: A written order to CONTRACTOR signed by COUNTY, CONTRACTOR and SURETY authorizing an addition, deletion or revision in the Work, or an adjustment in the Contract Price or the Contract Time and Surety Amount issued after the effective date of the Agreement.

Application for Payment: The form accepted by Engineer which is to be used by CONTRACTOR in requesting progress or final payment and which is to include such supporting documentation as is required by the Contract Documents.

Bid: The offer of the Bidder submitted on the prescribed form setting forth the prices for the Work to be performed.

Bonds: Bid, Performance, Payment and Warranty bonds and other instruments of security.

Contract Documents: The Agreement, Addenda (which pertain to the Contract Documents), Advertisement, Instructions To Bidders, CONTRACTOR'S Bid (including documentation accompanying the Bid and any post-Bid documentation submitted prior to the Agreement), the Bonds, the Standard Terms & Conditions, these General Conditions, the Special Provisions, Project Permits, related information/documentation provided to the Bidders, the Specifications, the Drawings as the same are more specifically identified in the Agreement, together with all Modifications issued after the execution of the Agreement, now on file in the Office of the Clerk of Circuit Court at the Flagler County Courthouse, Bunnell, Florida.

Contract Price: The moneys payable by COUNTY to CONTRACTOR under the Contract Documents as stated in the Agreement.

Contract Time: The number of calendar days or the date stated in the Agreement for the completion of the Work.

CONTRACTOR: The person, firm, or corporation with whom OWNER has entered into the Agreement.

COUNTY: Flagler County, Florida

DAY: A calendar day of twenty-four (24) hours measured from midnight to the next midnight.

Defective: An adjective which when modifying the word Work refers to Work that is unsatisfactory, faulty or deficient, or does not conform to the Contract Documents, or has been damaged prior to ENGINEER'S recommendation of final payment.

Drawings: The drawings which show the character and scope of the Work to be performed and which have been prepared or approved by ENGINEER and are referred to in the Contract Documents.

Effective Date of the Agreement: The date indicated in the Agreement on which it becomes effective, but if no such date is indicated it means the date, on which the Agreement is signed and delivered by the last of the two (2) parties to sign and deliver.

ENGINEER: The Flagler County Engineer or authorized representative.

Field Order: A written order issued by ENGINEER which orders minor changes in the Work in accordance with Paragraph 10.2 but which does not involve a change in the Contract Price or the Contract Time.

Final Completion: The date indicated in the Final Completion Certificate upon which the Work is declared to be complete and all guarantees and warranties begin.

Modification: (a) A written Agreement, amending the Contract Documents signed by both parties, (b) a Field Order. A Modification may only be issued after the effective date of the Agreement.

Notice of Award: The written notice by COUNTY to the apparent successful Bidder stating that upon compliance by the apparent successful Bidder with the conditions precedent enumerated therein, within the time specified, COUNTY will sign and deliver the Agreement.

Notice to Proceed: The written notice given by the ENGINEER to the CONTRACTOR fixing the date on which the Contract Time will commence to run and on which CONTRACTOR shall start to perform his obligation under the Contract Documents.

Owner: Flagler County, Florida

Project: The total construction of which the Work to be provided under the Contract Documents may be the whole, or a part as indicated elsewhere in the Contract Documents.

Resident Project Representative: The authorized representative of ENGINEER who is assigned to the site or any part thereof.

Shop Drawings: All drawings, diagrams, illustrations, schedules and other data, which are specifically prepared by CONTRACTOR, a subcontractor, manufacturer, fabricator, supplier or distributor to illustrate some portion of the Work and all illustrations, brochures, standard schedules, performance charts, instructions, diagrams and other information prepared by a manufacturer, fabricator, supplier or distributor and submitted by CONTRACTOR to illustrate material or equipment for some portion of the Work.

Special Provisions: Those portions of the Contract Documents consisting of written descriptions of Specifications, Conditions, Material, Equipment, Standard, workmanship, and administrative detail particular or peculiar to a Specific Project.

Specifications: Those portions of the Contract Documents consisting of written technical descriptions of materials, equipment, construction systems, standards and workmanship as applied to the Work and certain administrative details applicable thereto.

Subcontractor: An individual, firm or corporation having a direct Contract with CONTRACTOR or with any other subcontractor for the performance of a part of the Work at the site.

Substantial Completion: The Work (or a specified part thereof) has progressed to the point where, in the opinion of ENGINEER as evidenced by his definitive certificate of Substantial Completion, it is sufficiently complete, in accordance with the Contract Documents, so that the Work (or specified part) can be utilized for the purposes for which it was intended; or if there be no such certificate issued, when final payment is due in accordance with Article 14.13. The terms "substantially complete" and "substantially completed" as applied to any Work refer to Substantial Completion thereof.

Work: The entire completed construction or the various separately identifiable parts thereof required to be furnished under the Contract Documents. Work is the result of performing services, furnishing labor and furnishing and incorporating materials and equipment into the construction, all as required by the Contract Documents.

ARTICLE 2 -PRELIMINARY MATTERS

2.1 When CONTRACTOR delivers the executed Agreements to COUNTY, CONTRACTOR shall also deliver to COUNTY such Bonds, as CONTRACTOR may be required to furnish in accordance with Paragraph 5.1.

2.2 COUNTY shall furnish to CONTRACTOR up to five (5) copies (unless otherwise specified in the General Requirements) of the Contract Documents as are reasonably necessary for the execution of the Work. Additional copies will be furnished, upon request, at the cost of reproduction.

2.3 The Contract time will commence to run on the day indicated in the Notice-to-Proceed.

2.4 CONTRACTOR shall start to perform the Work on the date the Contract Time commences to run, but no Work shall be done at the site prior to that date.

2.5 Before undertaking each part of the Work, CONTRACTOR shall carefully study and compare the Contract Documents and check and verify pertinent figures shown thereon and all applicable field measurements. CONTRACTOR shall promptly report in writing to ENGINEER, any conflict, error, or discrepancy, which CONTRACTOR may discover.

2.6 Within ten (10) days after the effective date of the Agreement (unless otherwise specified in the General Requirements), CONTRACTOR shall submit an estimated progress schedule indicating the starting and completion dates of the various stages or phases of the Work, to ENGINEER for review and acceptance. This schedule may be in form of a bar chart or an illustrative schedule utilizing the Critical Path Method of planning.

2.7 Before any Work at the site is started, CONTRACTOR shall deliver to COUNTY, certificates (and other evidence of insurance requested by COUNTY), which CONTRACTOR is required to purchase and maintain in accordance with Article 5, with a copy to ENGINEER.

2.8 Within twenty (20) days after the effective date of the Agreement, but before CONTRACTOR starts the Work at the site, a conference will be held for review and acceptance of the schedules referred to in

Paragraph 2.6, to establish procedures for handling Shop Drawings and other submittals, and for processing Applications for Payment, and to establish a working understanding among the parties as to the Work.

ARTICLE 3-CONTRACT DOCUMENTS: INTENT AND REUSE

3.1 The Contract Documents comprise the entire Agreement between COUNTY and CONTRACTOR concerning the Work. They may be altered only by a Modification.

3.2 The Contract Documents are complementary; what is called for by one is as binding as if called for by all. If, during the performance of the Work, CONTRACTOR finds a conflict, error or discrepancy in the Contract Documents, he shall take no advantage of such conflict, error or discrepancy but shall report it to ENGINEER in writing at once and before proceeding with the Work affected thereby.

3.3 It is the intent of the Specifications and Drawings to describe a complete Project (or part thereof) to be constructed in accordance with the Contract Documents. Any Work that may reasonably be inferred from the Specifications or Drawings as being required to produce the intended result shall be supplied whether or not it is specifically called for. When words, which have a well-known technical or trade meaning are used to describe Work, materials or equipment such words shall be interpreted in accordance with such meaning. Reference to standard specifications, manuals or codes of any technical society, organization or association, or the code of any governmental authority, whether such reference be specific or by implication, shall mean the latest standard specification, manual or code in effect at the time of opening Bids except as may be otherwise specifically stated. However, no provision of any referenced standard specification, manual or code (whether or not specifically incorporated by reference in the Contract Documents) shall change the duties and responsibilities of COUNTY, CONTRACTOR or ENGINEER, or any of their agents or employees from those set forth in the Contract Documents. Clarifications and interpretations of the Contract Documents shall be issued by ENGINEER as provided for in Paragraph 9.6.

ARTICLE 4 -AVAILABILITY OF LANDS; PHYSICAL CONDITION; REFERENCE POINTS

4.1 CONTRACTOR shall promptly notify ENGINEER in writing of any subsurface or latent physical conditions at the site or in an existing structure differing materially for those indicated or referred to in the Contract Documents. ENGINEER will promptly review those conditions and shall notify Contractor of any revisions to the Work that may be necessary. If he determines further investigations or tests are needed he will cause them to be made and will provide copies of such procedures to CONTRACTOR. If ENGINEER finds that the results of such investigations or tests indicate that there are subsurface or latent physical conditions, which differ materially from those, indicated in the Contract Documents, and which could not reasonably have been anticipated by CONTRACTOR, an Agreement Amendment shall be issued incorporating the necessary revisions.

4.2 All Work shall take place on Public Rights-of-Way, unless specifically otherwise shown on the plans or in the other Contract Documents.

ARTICLE 5 - BONDS & INSURANCE

5.1 If the Surety on any Bond furnished by CONTRACTOR is declared a bankrupt or becomes insolvent or its right to do business is terminated in the State of Florida, CONTRACTOR shall within five (5) days thereafter substitute another Bond and Surety, both of which shall be acceptable to COUNTY.

5.2 CONTRACTOR shall purchase and maintain such comprehensive general liability and other insurance as will provide protection from claims set forth below which may arise out of or result from CONTRACTOR's performance of the Work and CONTRACTOR's other obligations under the Contract Documents, whether such performance is by CONTRACTOR, by any subcontractor, by anyone directly or indirectly employed by any of them, or by anyone for whose acts any of them may be liable:

5.2.1 Claims under workers' or workmen's compensation, disability benefits and other similar employee benefit acts;

5.2.2 Claims for damages because of bodily injury, occupational sickness or disease, or death of CONTRACTOR's employees;

5.2.3 Claims for damages because of bodily injury, sickness or disease, or death of any person other than CONTRACTOR's employees;

5.2.4 Claims for damages insured by personal injury liability coverage, which are sustained (i) by any person as a result of an offense directly or indirectly related to the employment of such person by CONTRACTOR or (ii) by any other person for any other reason;

5.2.5 Claims for damages because of injury to or destruction of tangible property, including loss of use resulting therefrom; and

5.2.6 Claims for damages because of bodily injury or death of any person or property damage arising out of the ownership, maintenance, or use of any motor vehicle.

The insurance required by this Article 5.2 shall include the specific coverages and be written for not less than the limits of liability and coverages provided in the Standard Terms and Conditions of the Contract Agreement, or required by law, whichever is greater. All insurance shall be in accordance with the requirements and criteria identified in the Standard Terms and Conditions of the Contract Agreement. All such insurance shall remain in effect until final payment and at all times thereafter when CONTRACTOR may be correcting, removing or replacing defective Work in accordance with Article 13. In addition, CONTRACTOR shall maintain such completed operations insurance for at least two (2) years after final payment and furnish COUNTY with evidence of continuation of such insurance at final payment and one (1) year thereafter.

5.3 The comprehensive general liability insurance required by Paragraph 5.2 will include Contractual liability insurance applicable to CONTRACTOR's obligations and responsibilities under Article 6.0.

ARTICLE 6-CONTRACTOR'S RESPONSIBILITIES:

6.1 CONTRACTOR shall supervise and direct the Work competently and efficiently, devoting such attention thereto and applying such skills and expertise as may be necessary to perform the Work in accordance with the Contract Documents. CONTRACTOR shall be solely responsible for the means, methods, techniques,

sequences, procedures and construction, which is indicated in and required by the Contract Documents. CONTRACTOR shall be responsible to see that the finished Work complies accurately with the Contract Documents.

6.2 CONTRACTOR shall keep a competent resident Superintendent on the Work at all times, who shall not be replaced without written notice to the ENGINEER except under extraordinary circumstances. The Superintendent will be CONTRACTOR's representative at the site and shall have authority to act on behalf of CONTRACTOR. All communications given to the Superintendent shall be as binding as if given to CONTRACTOR.

6.3 CONTRACTOR shall provide competent, suitably qualified personnel to survey and lay out the Work and perform construction as required by the Contract Documents. CONTRACTOR shall maintain good discipline and order at the site at all times. Except in connection with the safety or protection of persons or the Work or property at the site or adjacent thereto, and except as otherwise indicated in the Special Provisions, all Work at the site shall be performed during regular working hours, and CONTRACTOR will not permit overtime work or the performance of Work on Saturday, Sunday or any legal holiday without ENGINEER'S written consent.

6.4 CONTRACTOR shall furnish all materials, equipment, labor, transportation, construction equipment and machinery, tools, appliances, fuel, power, light, heat, telephone, water and sanitary facilities and all other facilities and incidentals necessary for the execution, testing, initial operation and completion of the Work.

6.5 All materials and equipment shall be of good quality and new, except as otherwise provided in the Contract Documents. If required by ENGINEER, CONTRACTOR shall furnish satisfactory evidence (including reports of required tests) as to the kind and quality of materials and equipment.

6.6 All materials and equipment shall be applied, installed, connected, erected, used, cleaned and conditioned in accordance with the instructions of the applicable manufacturer, fabricator, supplier or distributor, except as otherwise provided in the Contract Documents.

6.7 Whenever materials or equipment are specified or described in the Drawings or Specifications by using the name of a proprietary item or the name of a particular manufacturer, fabricator, supplier, or distributor, the naming of the item is intended to establish the type, function, and quality required. Unless the name is followed by words indicating that no substitution is permitted, materials or equipment of other manufacturers, fabricators, suppliers or distributors may be accepted by ENGINEER, if sufficient information is submitted by CONTRACTOR to allow ENGINEER to determine that the material or equipment proposed is equivalent to that named. The procedure for review by ENGINEER will be as set forth in Paragraphs 6.7.1 and 6.7.2 below.

6.7.1 Requests for review of substitute items of material and equipment will not be accepted by ENGINEER from anyone other than CONTRACTOR. If CONTRACTOR wishes to furnish or use a substitute item of material or equipment

CONTRACTOR shall make written application to ENGINEER for acceptance thereof, certifying that the proposed substitute will perform adequately the functions called for by the general design, be similar and of equal substance to that specified and be suited to the same use and capable of performing the same function

as that specified. The application will state whether or not acceptance of the substitute for use in the Work will require a change in the Drawings or Specifications to adapt the design to the substitute and whether or not incorporation or use of the substitute in connection with the Work is subject to payment of any license fee or royalty. All variations of the proposed substitute from that specified shall be identified in the application and available maintenance, repair and replacement service will be indicated. The application will also contain an itemized estimate of all costs that will result directly or indirectly from acceptance of such substitute, including costs of redesign and claims of other CONTRACTORS affected by the resulting change, all of which shall be considered by the ENGINEER, who may require CONTRACTOR to furnish, at CONTRACTOR's expense, additional data about the proposed substitute.

ENGINEER will be the sole judge of acceptability, and no substitute will be ordered or installed without ENGINEER's prior written acceptance. COUNTY may require CONTRACTOR to furnish, at CONTRACTOR's expense, a special performance guarantee or other surety with respect to any substitute.

6.7.2 ENGINEER will record time required by ENGINEER in evaluating substitutions proposed by CONTRACTOR and in making changes in the Drawings or Specifications occasioned thereby. Whether or not ENGINEER accepts a proposed substitute, CONTRACTOR shall reimburse COUNTY for the engineering charges involved in evaluating any proposed substitute.

6.8 CONTRACTOR shall not employ any Subcontractor or other person or organization (including those who are to furnish the principal items of materials or equipment), whether initially or as a substitute, against whom COUNTY may have reasonable objection. A Subcontractor or other person or organization identified in writing to ENGINEER by CONTRACTOR prior to the Notice of Award and not objected to in writing by ENGINEER prior the Notice of Award will be deemed acceptable by ENGINEER. Acceptance of any Subcontractor, other person, or organization by ENGINEER shall not constitute a waiver of any right of ENGINEER to reject defective Work. If ENGINEER, after due investigation, has reasonable objection to any Subcontractor, other person or organization proposed by CONTRACTOR, after the Notice of Award, CONTRACTOR shall submit an acceptable substitute.

6.9 CONTRACTOR shall be fully responsible for all acts and omissions of his Subcontractors and of persons and organizations directly or indirectly employed by them and of persons and organizations for whose acts any of them may be liable to the same extent the CONTRACTOR is responsible for the acts and omissions of persons directly employed by CONTRACTOR. Nothing in the Contract Documents shall create any Contractual relationship between COUNTY and any Subcontractor or other person or organization having a direct contact with CONTRACTOR, nor shall it create any obligation on the part of COUNTY to pay or to see to the payment of any moneys due any Subcontractor or other person or organization, except as may otherwise be required by law. COUNTY may furnish to any Subcontractor or other person or organization, to the extent practicable, evidence of amounts paid to CONTRACTOR on account of specific Work done.

6.10 All Work performed for CONTRACTOR by a Subcontractor will be pursuant to an appropriate Agreement between CONTRACTOR and the Subcontractor which specifically binds the subcontractor to the applicable terms and conditions of the Contract Documents for the benefit of COUNTY and contains provisions required by Article 5.

6.11 CONTRACTOR shall pay all license fees and royalties and assume all costs incident to the use in the performance of the Work or the incorporation in the Work of any invention, design, process, product or device which is the subject of patent rights or copyrights held by others. If a particular invention, design, process, product or device is specified in the Contract Documents for use in the performance of the Work and if, to the actual knowledge of COUNTY, its use is subject to patent rights or copyrights calling for the payment of any license fee or royalty to others, the existence of such rights shall be disclosed by OWNER in the Contract Documents. CONTRACTOR shall indemnify and hold harmless COUNTY from and against all claims, damages, losses and expenses (including Attorneys' fees) arising out of any infringement of patent rights or copyrights incident to the use in the performance of the Work or resulting from the incorporation in the Work of any invention, design, process, product or device not specified in the Contract Documents, and shall defend all such claims in connection with any alleged infringement of such rights.

6.12 Unless otherwise provided in the Special Provisions, CONTRACTOR shall obtain and pay for all construction permits and licenses. CONTRACTOR shall pay all charges and fees necessary for the prosecution of the Work, which are applicable at the time of opening of Bids. CONTRACTOR shall pay all charges of utility service companies for connections required for performance of his Work.

6.13 CONTRACTOR shall give all notices and comply with all laws, ordinances, rules, and regulations applicable to the Work. If CONTRACTOR observes that the Specifications or Drawings are at variance therewith, CONTRACTOR shall give ENGINEER prompt written notice thereof, and any necessary changes shall be adjusted by an appropriate Modification. If CONTRACTOR performs any Work knowing or having reason to know that it is contrary to such laws, ordinances, rules, and regulations, and without such notice to ENGINEER, CONTRACTOR shall bear all costs arising therefrom: however, it shall not be CONTRACTOR's primary responsibility to make certain that the Specifications and Drawings are in accordance with such laws, ordinances, rules and regulations.

6.14 CONTRACTOR shall pay all sales, consumer, use, and other similar taxes required to be paid by him in accordance with the law.

6.15 CONTRACTOR shall confine construction equipment, the storage of materials and equipment and the operations of workmen to areas permitted by law, ordinances, permits or the requirements of the Contract Documents, and shall not unreasonably encumber the premises with construction equipment or other materials or equipment.

6.16 During the progress of the Work, CONTRACTOR shall keep the premises free from accumulations of waste materials, rubbish and other debris resulting from the Work. At the completion of the Work CONTRACTOR shall remove all waste materials, rubbish and debris from and about the premises as well as all tools, appliances, construction equipment and machinery, and surplus materials, and shall leave the site clean and ready for use by OWNER. CONTRACTOR shall restore to their original condition those portions of the site not designated for alteration by the Contract Documents.

6.17 CONTRACTOR shall not load nor permit any part of any structure to be loaded in any manner that will endanger the structure, nor shall CONTRACTOR subject any part of the Work or adjacent property to stresses or pressures that will endanger it.

6.18 CONTRACTOR shall keep one (1) record copy of all Specifications, Drawings, Addenda, Modifications, Shop Drawings, and samples at the site, in good order and annotated to show all changes made during the construction process. These shall be available to ENGINEER for examination and shall be delivered to ENGINEER upon completion of the Work.

6.19 CONTRACTOR shall be responsible for initiating, maintaining and supervising all safety precautions and programs in connection with the Work. CONTRACTOR shall take all necessary precautions for the safety of, and shall provide the necessary protection to prevent damage, injury or loss to:

6.19.1 All employees on the work and other persons who may be affected thereby.

6.19.2 All the Work and all materials or equipment to be incorporated therein, whether in storage on or off the site, and

6.19.3 Other property at the site or adjacent thereto, including trees, shrubs, lawns, walks, pavements, roadways, structures and utilities not designated for removal, relocation or replacement in the course of construction.

CONTRACTOR shall comply with all applicable laws, ordinances, rules, regulations, and orders of any public body having jurisdiction for the safety of persons or property or to protect them from damage, injury, or loss; and shall erect and maintain all necessary safeguards for such safety and protection. CONTRACTOR shall notify owners of adjacent property and utilities when prosecution of the Work may affect them. All damage, injury or loss to any property caused, directly or indirectly, in whole or in part, by CONTRACTOR, any Subcontractor or anyone directly or indirectly employed by any of them or anyone for whose acts any of them may be liable, shall be remedied by CONTRACTOR. CONTRACTOR's duties and responsibilities for the safety and protection of the Work shall continue until such time as all the Work is completed and ENGINEER has issued a notice to CONTRACTOR that the Work is acceptable.

6.20 CONTRACTOR shall designate a responsible member of his organization at the site whose duty shall be the prevention of accidents. This person shall be CONTRACTOR's Superintendent unless otherwise designated in writing by CONTRACTOR to ENGINEER.

6.21 In emergencies affecting the safety or protection of persons or the Work or property at the site or adjacent thereto, CONTRACTOR, without special instruction or authorization from COUNTY, is obligated to act to prevent threatened damage, injury or loss. CONTRACTOR shall give ENGINEER prompt written notice of any significant changes in the Work or deviations from the Contractor Documents caused thereby.

6.22 After checking and verifying all field measurements, CONTRACTOR shall submit to ENGINEER for review and approval, in accordance with the accepted schedule of Shop Drawing submissions, three (3) copies (unless otherwise specified) of all Shop Drawings, which shall have been checked by and stamped with the approval of CONTRACTOR and identified as ENGINEER may require. The data shown on the Shop Drawings will be complete with respect to dimensions, design criteria, materials of construction and like information to enable ENGINEER to review the information as required.

6.23 CONTRACTOR shall also submit to ENGINEER for review and approval with such promptness as to cause no delay in Work, all samples required by the Contract Documents. All samples will have been checked by and

stamped with the approval of CONTRACTOR, identified clearly as to material, manufacturer, any pertinent catalog numbers and the use for which intended.

6.24 At the time of each submission, CONTRACTOR shall, in writing, call ENGINEER's attention to any deviations that the Shop Drawings or samples may have from the requirements of the Contract Documents.

6.25 ENGINEER will review and approve Shop Drawings and samples, with reasonable promptness but ENGINEER's review and approval shall be only for conformance with the design concept of the Project and for compliance with the information given in the Contract Documents and shall not extend to means, methods, sequences, techniques or procedures of construction or to safety precautions or programs incident thereto. The review and approval of a separate item as such will not indicate approval of the assembly in which the item functions. CONTRACTOR shall make any corrections required by ENGINEER and shall return the required number of corrected copies of Shop Drawings and resubmit new samples for review and approval. CONTRACTOR shall direct specific attention in writing to revisions other than the corrections called for by ENGINEER on previous submittals. CONTRACTOR's stamp of approval on any Shop Drawing or sample shall constitute a representation to and ENGINEER that CONTRACTOR has either determined and verified all quantities, dimensions, field construction criteria, materials, catalog numbers, and similar data or assumes full responsibility for doing so, and that CONTRACTOR has reviewed or coordinated each Shop Drawing or sample with the requirements of the Work and Contract Documents.

6.26 Where a Shop Drawing or sample is required by the Contract Documents, no related Work shall commence until the submittal has been reviewed and approved by ENGINEER.

6.27 ENGINEER's review and approval of Shop Drawings or samples shall not relieve CONTRACTOR from responsibility for any deviations from the Contract Documents unless CONTRACTOR has in writing called ENGINEER's attention to such deviation, nor shall any concurrence and approval to the specific deviation, nor shall any concurrence or approval by ENGINEER relieve CONTRACTOR from responsibility for errors or omissions in the Shop Drawings.

6.28 CONTRACTOR shall carry on the Work and maintain the progress schedule during all disputes or disagreements with COUNTY. No Work shall be delayed or postponed pending resolution of any disputes or disagreements, except as CONTRACTOR and COUNTY may otherwise agree in writing.

6.29 To the fullest extent permitted by law, CONTRACTOR shall indemnify and hold harmless COUNTY and its agents and employees from and against all claims, damages, losses and expenses including but not limited to Attorneys' fees arising out of or resulting from the performance of the Work, provided that any such claim, damage, loss or expense (a) is attributable to bodily injury, sickness, disease or death, or to injury to or destruction of tangible property (other than the Work itself) including the loss of use resulting therefrom and (b) is caused in whole or in part by any negligent act or omission of CONTRACTOR, any Subcontractor, anyone directly or indirectly employed by any of them or anyone for whose acts any of them may be liable, regardless of whether or not it is caused in part by a party indemnified hereunder.

6.30 No Work shall be done or materials used, without suitable supervision or inspection by the ENGINEER or ENGINEER’S representative, and the CONTRACTOR shall furnish the ENGINEER with every reasonable facility for ascertaining whether the Work performed and materials used are in accordance with the requirements

and intent of the Specifications. If the ENGINEER so requests, the CONTRACTOR shall, at any time before final acceptance of the Work, remove or uncover such portions of the finished Work as may be directed. After examination, the CONTRACTOR shall restore the uncovered portions of the Work so exposed and examined. Should the Work thus exposed and examined prove unacceptable the covering, removing, and the replacing of the covering or making good of the parts removed shall be at the CONTRACTOR'S expense. However, should the Work thus exposed and examined prove acceptable the uncovering or removing and the replacing of the covering or making good of the parts removed shall be paid for as extra Work.

ARTICLE 7-WORK BY OTHERS

7.1 COUNTY may perform additional Work related to the Project by itself, or have additional Work performed by utility service companies, or let other direct Contracts therefor which shall contain General Conditions similar to these. CONTRACTOR shall afford the utility service companies and the other Contractors who are parties to such direct Contracts (or COUNTY, if COUNTY is performing the additional Work with COUNTY employees) reasonable opportunity for the introduction and storage of materials and equipment and the execution of Work, and shall properly connect and coordinate his Work with theirs.

7.2 If any part of CONTRACTOR's Work depends for proper execution or results upon the Work of any such other Contractor or utility service company (or COUNTY), CONTRACTOR shall inspect and promptly report to ENGINEER in writing any patent or apparent defects or deficiencies in such Work that render it unsuitable for such proper execution and results. CONTRACTOR's failure so to report shall constitute an acceptance of the other Work as fit and proper for integration with CONTRACTOR's Work except for latent or non-apparent defects and deficiencies in the other Work.

7.3 CONTRACTOR shall do all cutting, fitting and patching of his Work that may be required to make its several parts come together properly and integrate with such other Work. CONTRACTOR shall not endanger any Work of others by cutting, excavating or otherwise altering their Work and will only cut or alter their Work with the written consent of ENGINEER and the others whose Work will be affected.

7.4 If the performance of additional Work by other Contractors or utility service companies or COUNTY was not noted in the Contract Documents, written notice thereof shall be given to CONTRACTOR prior to starting any such additional Work. If CONTRACTOR believes that the performance of such additional work by COUNTY or others involve additional expense to CONTRACTOR or requires an extension of the Contract Time, CONTRACTOR may make claim therefor as provided herein after.

ARTICLE 8-COUNTY'S RESPONSIBILITIES

8.1 COUNTY shall issue all communications to CONTRACTOR through ENGINEER.

8.2 COUNTY shall furnish the data required of COUNTY under the Contact Documents promptly and shall make payments to CONTRACTOR promptly after they are due as provided for herein after.

8.3 In connection with COUNTY'S right to stop Work or suspend Work, see Articles 13 and 15.

ARTICLE 9-ENGINEER'S STATUS DURING CONSTRUCTION

9.1 ENGINEER will make visits to the site at intervals appropriate to the various stages of construction to observe the progress and quality of the executed Work and to determine, in general, if the Work is proceeding in accordance with the Contract Documents. ENGINEER will not be required to make exhaustive or continuous on-site inspections to check the quality or quantity of the Work. ENGINEER's efforts will be directed toward providing for COUNTY a greater degree of confidence that the completed Work will conform to the Contract Documents.

9.2 ENGINEER will issue such written clarifications or interpretations of the Contract Documents (in the form of Drawings or otherwise) as ENGINEER may determine necessary with reasonable promptness, which shall be consistent with or reasonably inferable from the overall intent of the Contract Documents. If CONTRACTOR believes that a written clarification of Interpretation justifies an increase in the Contract Price of Contract Time, CONTRACTOR may make a claim therefore as provided herein after.

9.3 ENGINEER will have authority to disapprove or reject Work, which is defective and will also have authority to require special inspection or testing of the Work as it is fabricated, installed or completed.

If during or prior to construction operations, the ENGINEER should fail to reject defective Work or materials, whether from lack of discovery of such defect or for any other reason, such initial failure to reject shall in no way prevent his later rejection when such defect is discovered, or obligate the Owner to final acceptance, and the CONTRACTOR shall make no claim for losses suffered due to any necessary removals or repairs of such defects. Should the CONTRACTOR fail or refuse to remove or repair such defects in an acceptable or timely fashion then the County may, in its own judgment, exercise its option under Paragraph 13.9.

9.4 In connection with ENGINEER's responsibilities as to Agreement Amendments, see Articles 10, 11 and 12.

9.5 In connection with ENGINEER's responsibilities in respect of Applications for Payment, etc., see Article 14.

9.6 ENGINEER will be the initial interpreter of the requirements of the Contract Documents and judge of the acceptability of the Work thereunder. Claims, disputes and other matters relating to the acceptability of the Work or the interpretation of the requirements of the Contract Documents pertaining to the execution and progress of the Work shall be referred initially to ENGINEER in writing with a request for a formal decision in accordance with this Paragraph, which ENGINEER will render in writing within a reasonable time. Written notice of each such claim, dispute and other matter shall be delivered by the claimant to ENGINEER within fifteen (15) days of the occurrence of the event giving rise thereto, and written supporting data will be submitted to ENGINEER within forty-five (45) days of such occurrence unless ENGINEER allows an additional period of time to ascertain more accurate date.

9.7 The rendering of a decision by ENGINEER pursuant to Paragraph 9.6 with respect to any such claim, dispute or other matter (except any which have been waived by the making or acceptance of final payment)

will be a condition precedent to any exercise by CONTRACTOR of such rights or remedies as he may otherwise have under the Contract Documents or at law in respect of any such claim, dispute or other matter.

9.8 Whenever in the Contract Documents the terms "as ordered", "as directed", "as required", "as allowed" or terms of like effect or import are used, or the adjectives "reasonable", suitable", "acceptable", "proper", or "satisfactory" or adjectives of like effect or import are used, to describe requirement, direction, review or judgment of ENGINEER as to the Work, it is intended that such requirement, direction, review or judgment will be solely to evaluate the Work for compliance with the Contact Documents (unless there is a specific statement indicating otherwise). The use of any such term or adjective never indicates that ENGINEER shall have authority to supervise or direct performance of the Work or authority to undertake responsibility contrary to the provisions of Paragraphs 9.9 or 9.10.

9.9 COUNTY will not be responsible for CONTRACTOR's means, methods, techniques, sequences or procedures of construction, or the safety precautions and programs incident thereto, and COUNTY will not be responsible for CONTRACTOR's failure to perform the Work in accordance with the Contract Documents.

9.10 COUNTY will not be responsible for the acts or omissions of CONTRACTOR or of any Subcontractors, or of the agents or employees of any CONTRACTOR or Subcontractor, or of any other persons at the site or otherwise performing any of the Work.

ARTICLE 10-CHANGES IN THE WORK

10.1 Without invalidating the Agreement, COUNTY may, at any time or from time to time, order additions, deletions or revisions in the Work. Such addition, deletions, or revisions that result in additions to the amount of work, or the time required to perform it, will be authorized by Agreement Amendment. Upon receipt of an Agreement Amendment, CONTRACTOR shall proceed with the Work involved. All such Work shall be executed under the applicable conditions of the Contract Documents.

10.2 ENGINEER may authorize minor changes in the Work not involving an adjustment in the Contract Price or the Contract Time, which are consistent with the overall intent of the Contract Documents. These may be accomplished by a Field Order and shall be binding on CONTRACTOR who shall perform the change promptly. If CONTRACTOR believes that a Field Order justifies an increase in the Contract Price or Contract Time, CONTRACTOR may make a claim therefore as provided for herein after.

10.3 Additional Work performed without authorization of an executed Agreement Amendment will not entitle CONTRACTOR to an increase in the Contract Price or an extension of the Contract Time.

10.4 COUNTY shall execute appropriate Agreement Amendment prepared by ENGINEER covering changes in the Work which are required by COUNTY, or required because of unforeseen physical conditions or emergencies, or because of uncovering Work found not to be defective, or as provided in Article 11, or because of any other claim of CONTRACTOR for a change in the Contract Time or the Contract Price which is recommended by ENGINEER and agreed to by COUNTY.

10.5 Notice of any change affecting the general scope of the Work or change in the Contract Price is required to be given to the Bond Surety, it will be CONTRACTOR's responsibility to so notify the Surety, and

the amount of each applicable Bond shall be adjusted accordingly. CONTRACTOR shall furnish proof of such adjustment to COUNTY.

ARTICLE 11 -CHANGE OF CONTRACT PRICE

11.1 The Contract Price constitutes the total compensation (subject to authorized adjustments) payable to CONTRACTOR for performing the Work. All duties, responsibilities, and obligations assigned to or undertaken by CONTRACTOR shall be at his expense without change in the Contract Price.

11.2 The Contract Price may only be changed by an Agreement Amendment. Any claim for an increase in the Contract Price shall be based on written notice delivered to ENGINEER within fifteen (15) days of the occurrence of the event-giving rise to the claim. Notice of the amount of the claim with supporting data shall be delivered within forty-five (45) days of such occurrence unless ENGINEER allows an additional period of time to ascertain accurate cost data. All claims for adjustment in the Contract Price shall be reviewed by ENGINEER and recommended to COUNTY. Any change in the Contract Price resulting from any such claim shall be incorporated in an Agreement Amendment.

11.3 The value of any Work covered by an Agreement Amendment or of any claim for an increase or decrease in the Contract Price shall be determined in one of the following ways:

11.3.1 Where the Work involved is covered by unit prices contained in the Contract Documents, by application of unit prices to the quantities of the items involved.

11.3.2 By mutual acceptance of a lump sum.

11.3.3 On the basis of the Cost of the Work (determined as provided in Paragraphs 11.4 and 11.5) plus a Contractor's Fee for overhead and profit (determined as provided for Paragraph 11.6).

11.4 The term Cost of the Work means the sum of all costs necessarily incurred and paid by CONTRACTOR in the proper performance of the Work. Except as otherwise may be agreed to in writing by COUNTY, such costs shall be in amounts no higher than those prevailing in the locality of the Project, shall include only the following items and shall not include any of the costs itemized in Paragraph 11.5:

11.4.1 Payroll costs for employees in the direct employ of CONTRACTOR in the performance of the Work under schedules of job classifications agreed upon by COUNTY and CONTRACTOR. Payroll costs for employees not employed full time on the Work shall be apportioned on the basis of their time spent on the Work. Payroll costs shall include, but not be limited to, salaries and wages plus the cost of fringe benefits which shall include social security contributions, unemployment, excise and payroll taxes, workers' or workmen's compensation, health and retirement benefits, bonuses, sick leave, vacation and holiday pay applicable thereto. Such employees shall include superintendents and foremen at the site. The expenses of performing Work after regular working hours, on Sunday or legal holidays shall be included in the above to the extent authorized by COUNTY.

11.4.2 Cost of all materials and equipment furnished and incorporated in the Work, including costs of transportation and storage thereof, and manufacturers' field services required in connection

therewith. All cash discounts shall accrue to CONTRACTOR unless COUNTY deposits funds with CONTRACTOR with which to make payments, in which case the cash discounts shall accrue to COUNTY. All trade discounts, rebates and refunds, and all returns from sale of surplus materials and equipment shall accrue to COUNTY and CONTRACTOR shall make provisions so that they may be obtained.

11.4.3 Payments made by CONTRACTOR to the Subcontractors for Work performed by Subcontractors acceptable to CONTRACTOR and shall deliver such Bids to ENGINEER who will determine which Bids will be accepted. If a subcontract provides that the Subcontractor is to be paid on the basis of Cost of the Work such costs shall be determined in the same manner as CONTRACTOR's Cost of the Work. All subcontracts shall be subject to the other provisions of the Contract Documents in so far as applicable.

11.4.4 Costs of special Consultants (including, but not limited to, engineers, architects, testing laboratories, surveyors. lawyers and accountants) employed for service specifically related to the Work.

11.4.5 Supplemental costs including the following:

11.4.5.1 The proportion of necessary transportation, travel, and subsistence expenses of CONTRACTOR's employees incurred in discharge of duties connected with the Work.

11.4.5.2 Cost, including transportation and maintenance, of all materials, supplies, equipment, machinery, appliances, office and temporary facilities at the site and hand tools not owned by the workmen which are consumed in the performance of the Work and cost less market value of such items used but not consumed which remain the property of CONTRACTOR.

11.4.5.3 For any machinery or special equipment (other than small

tools), including fuel and lubricant, the Contractor will receive 100% of the “Rental Rate Blue Book” for the actual time that such equipment is in operation on the work, and 50% of the “Rental Rate Blue Book” for the time the equipment is directed to standby and remain on the project site, to be calculated as indicated below. The equipment rates will be based on the latest edition (as of the date the work to be performed begins) of the “Rental Rate Blue Book for Construction Equipment” or the “Rental Rate Blue Book for Older Construction Equipment,” whichever is applicable, as published by Machinery Information Division of PRIMEDIA Information, Inc. (version current at the time of bid), using all instructions and adjustments contained therein and as modified below. On all projects, the Engineer will adjust the rates using regional adjustments and Rate Adjustment Tables according to the instructions in the Blue Book.

Allowable Equipment Rates will be established as set out below:

(1) Allowable Hourly Equipment Rate = Monthly Rate/176 x Adjustment Factors x 100%.

(2) Allowable Hourly Operating Cost = Hourly Operating

Cost x 100%.

(3) Allowable Rate Per Hour = Allowable Hourly Equipment Rate + Allowable Hourly Operating Cost.

(4) Standby Rate = Allowable Hourly Equipment Rate x 50%.

The Monthly Rate is The Basic Machine Rate Plus Any Attachments. Standby rates will apply when equipment is not in operation and is directed by the Engineer to standby at the project site when needed again to complete work and the cost of moving the equipment will exceed the accumulated standby cost. Standby rates will not apply on any day the equipment operates for eight or more hours. Standby payment will be limited to only that number of hours which, when added to the operating time for that day equals eight hours. Standby payment will not be made on days that are not normally considered work days on the project.

The COUNTY will allow for the cost of transporting the equipment to and from the location at which it will be used. If the equipment requires assembly or disassembly for transport, the COUNTY will pay for the time to perform this work at the rate for standby equipment.

Equipment may include vehicles utilized only by Labor, as defined above.

11.4.5.4 The COUNTY is not liable for sales tax.

11.4.5.5 Deposits lost for causes other than CONTRACTOR's negligence, royalty payments, and fees for permits and licenses.

11.4.5.6 Losses and damages (and related expenses), not compensated by insurance or otherwise, to the Work or otherwise sustained by CONTRACTOR in connection with the execution of the Work, provided they have resulted from causes other than the negligence of CONTRACTOR, any Subcontractor, or anyone directly or indirectly employed by any of them or for whose acts any of them may be liable. Such losses shall include settlements made with the written consent and approval of COUNTY. No such losses, damages, and expenses shall be included in the Cost of the Work for the purpose of determining Contractor's Fee. If, however, any such loss or damage requires reconstruction and CONTRACTOR is placed in charge thereof, CONTRACTOR shall be paid for services a fee proportionate to that stated herein after.

11.4.5.7 The cost of utilities, fuel and sanitary facilities at the site.

11.4.5.8 Minor expenses such as telegrams, long distance telephone calls, telephone service at the site, expressage and similar petty cash items in connection with the Work.

11.4.5.9 Cost of premiums for additional Bonds and insurance required because of changes in the Work.

11.5 The term Cost of the Work shall ***not*** include any of the following:

11.5.1 Payroll costs and other compensation of CONTRACTOR's officers, executives, principals (of partnership and sole proprietorships), general managers, engineers, architects, estimators, lawyers, auditors, accountants, purchasing and contracting agents, expeditors, timekeepers, clerks and other

personnel employed by CONTRACTOR whether at the site or in his principal or a branch office for general administration of the Work and not specifically included in the agreed upon schedule of job classifications referred to in Subparagraph 11.4.1 all of which are to be considered administrative costs covered by the Contractor's Fee.

11.5.2 Expenses of CONTRACTOR's principal and branch offices other than CONTRACTORs office at the site.

11.5.3 Any part of CONTRACTOR's capital expenses, including interest on CONTRACTOR's capital employed for the Work and charges against CONTRACTOR for delinquent payments.

11.5.4 Cost of premiums for all Bonds and for all insurance, whether or not CONTRACTOR is required by the Contract Documents to purchase and maintain the same (except for additional Bonds and insurance required because of changes in the Work).

11.5.5 Costs due to the negligence of CONTRACTOR, any Subcontractor, or anyone directly or indirectly employed by any of them or for whose acts any of them may be liable, including but not limited to, the correction of defective Work, disposal of materials or equipment wrongly supplied and making good any damage to property.

11.5.6 Other overhead or general expense costs of any kind and the costs of any item not specifically and expressly included in Paragraph 11.4.

Contractor's Fee:

11.6 The Contractor's Fee allowed to CONTRACTOR for overhead and profit shall be determined as follows:

11.6.1 A mutually acceptable fixed fee; or if none can be agreed upon:

11.6.2 A fee based on the following percentages of the various portions of the Cost of the Work:

11.6.2.1 For costs incurred under Paragraphs 11.4.1 and 11.4.2, the Contractor's Fee shall be ten (10) percent.

11.6.2.2 For costs incurred under Paragraph 11.4.3, the Contractor's Fee shall be five (5) percent; and if a subcontract is on the basis of Cost of the Work Plus a Fee, the maximum allowable to the Subcontractor as a fee for overhead and profit shall be ten (10) percent, and

11.6.2.3 No fee shall be payable on the basis of costs itemized under Paragraphs 11.4.4, 11.4.5 and 11.5.

11.7 The amount of credit to be allowed by CONTRACTOR to COUNTY for any such change, which results in a net decrease in cost, will be the amount of the actual net decrease. When both additions and credits are involved in any one change, the combined overhead and profit shall be figured on the basis of the net increase, if any.

11.8 Whenever the cost of any Work is to be determined pursuant to Paragraphs 11.4 and 11.5, CONTRACTOR will submit in form acceptable to ENGINEER an itemized cost breakdown together with supporting data.

11.9 Where the quantity of Work with respect to an item that is covered by a unit price differs materially and significantly from the quantity of such Work indicated in the Contract Documents an appropriate Agreement Amendment shall be issued on recommendation of ENGINEER and approval by COUNTY to adjust the unit price.

11.10 It is understood that CONTRACTOR has included in the Contract Price all allowances so named in the Contract Documents and shall cause the Work so covered to be done by such subcontractors, manufacturers, fabricators, suppliers or distributors and for such sums within the limit of the allowances as may be acceptable to ENGINEER. Upon final payment, the Contract Price shall be adjusted as required and an appropriate Agreement Amendment issued. CONTRACTOR agrees that the original Contract Price includes such sums, as CONTRACTOR deems proper for costs and profit on account of cash allowances. No demand for additional cost or profit in connection therewith will be valid.

ARTICLE 12-CHANGE OF THE CONTRACT TIME

12.1 The Contract Time may only be changed by an Agreement Amendment. Any claim for an extension in the Contract Time shall be based on written notice delivered to ENGINEER within fifteen (15) days of the occurrence of the event, giving rise to the claim. Notice of the extent of the claim with supporting data shall be delivered within forty-five (45) days of such occurrence unless ENGINEER allows an additional period of time to ascertain more accurate data. All claims for adjustment in the Contract Time shall be determined by ENGINEER and forwarded to COUNTY for approval. Any change in the Contract Time resulting from any such claim shall be incorporated in an Agreement Amendment.

12.2 The Contract Time will be extended in an amount equal to time lost due to delays beyond the control of CONTRACTOR if a claim is made therefore as provided in Paragraph 12.1. Such delays shall include, but not be limited to, acts or neglect by COUNTY or others performing additional Work as contemplated by Article 7, or to fires, floods, labor disputes, epidemics, abnormal weather conditions, or acts of God.

12.3 All time limits stated in the Contract Documents are of the essence of the Agreement. The provisions of this Article 12 shall not exclude recovery for damages (including compensation for additional professional services) for delays caused by the CONTRACTOR.

ARTICLE 13-WARRANTY AND GUARANTEE; TESTS AND INSPECTIONS; CORRECTION, REMOVAL OR ACCEPTANCE OF DEFECTIVE WORK.

13.1 CONTRACTOR warrants and guarantees to COUNTY that all Work will be in accordance with the Contract Documents and will not be defective. Prompt notice of all defects shall be given to CONTRACTOR. All defective Work, whether or not in place, may be rejected, corrected, or accepted as provided in this Article 13.

13.2 ENGINEER and ENGINEER's representatives, other representatives of COUNTY,

testing agencies and governmental agencies with jurisdictional interests will have access to the Work at reasonable times for their observation, inspection and testing. CONTRACTOR shall provide proper and safe conditions for such access.

13.3 CONTRACTOR shall give ENGINEER timely notice of readiness of the Work for all required inspections, tests or approvals.

13.4 Neither observations by ENGINEER nor inspections, tests or approvals by others shall relieve CONTRACTOR from his obligations to perform the Work in accordance with the Contract Documents.

13.5 If the Work is defective, or CONTRACTOR fails to supply sufficient skilled workmen or suitable materials or equipment, COUNTY may order CONTRACTOR to stop the Work, or any portion thereof, until the cause for such order has been eliminated; however, this right of COUNTY to stop the Work shall not give rise to any duty on the part of COUNTY to exercise this right for the benefit of CONTRACTOR or any other party.

13.6 If required by ENGINEER, CONTRACTOR shall promptly, without cost to COUNTY and as specified by ENGINEER, either correct any defective Work, whether or not fabricated, installed or completed, or, if the Work has been rejected by ENGINEER, remove it from the site and replace it with non-defective Work.

13.7 If within one (1) year or other period otherwise specified in the Contract Documents after the date of Final Completion, any Work is found to be defective, CONTRACTOR shall promptly, without cost to COUNTY and in accordance with COUNTY's written instructions, either correct such defective Work, or, if it has been rejected by COUNTY, remove it from the site and replace it with non-defective Work. If CONTRACTOR does not promptly comply with the terms of such instructions, or in an emergency where delay would cause serious risk of loss or damage, COUNTY may have the defective Work corrected or the rejected Work removed and replaced, and all direct and indirect costs of such removal and replacement, including compensation for additional professional services, shall be paid by CONTRACTOR.

13.8 If, instead of requiring correction or removal and replacement of defective Work, COUNTY (prior to ENGINEER's recommendation of final payment) prefers to accept it, COUNTY may do so. In such case, if acceptance occurs prior to ENGINEER's recommendation of final payment, an Agreement Amendment shall be issued incorporating the necessary revisions in the Contract Documents, including appropriate reduction in the Contract Price; or, if the acceptance occurs after such recommendation an appropriate amount shall be paid by CONTRACTOR to COUNTY.

13.9 If CONTRACTOR fails within a reasonable time after written notice from ENGINEER to correct defective Work or to remove and replace rejected Work or if CONTRACTOR fails to perform the Work in accordance with the Contract Documents (including any requirements of the progress schedule), COUNTY may, after seven (7) days' written notice to CONTRACTOR, correct and remedy any such deficiency. In exercising its rights under this Paragraph, COUNTY shall proceed expeditiously. To the extent necessary to complete corrective and remedial action, COUNTY may exclude CONTRACTOR from all or part of the site, take possession of all or part of the Work, and suspend CONTRACTOR's services related thereto. CONTRACTOR shall allow COUNTY, COUNTY's representatives, agents and employees such access to the site as may be necessary to enable

COUNTY to exercise its rights under this Paragraph. All direct and indirect costs of COUNTY in exercising such rights shall be charged against CONTRACTOR in an amount verified by ENGINEER, and an Agreement Amendment shall be issued incorporating the necessary revisions in the Contract Documents and a reduction in the Contract Price. Such direct and indirect costs shall include, in particular but without limitation, compensation for additional professional services required and all costs of repair and replacement of Work of others destroyed or damaged by correction, removal or replacement of CONTRACTOR's defective Work. CONTRACTOR shall not be allowed an extension of the Contract Time because of any delay in performance of the Work attributable to the exercise by COUNTY of COUNTY's rights hereunder.

ARTICLE 14-PAYMENTS TO CONTRACTOR AND COMPLETION

14.1 At least ten (10) days prior to submitting the first Application for a progress payment, CONTRACTOR shall submit to ENGINEER a progress schedule, a final schedule based on the schedule submitted as required in Paragraph 2.6, a schedule of Shop Drawing submission (where applicable) and, where applicable, a schedule of values of the Work. These schedules shall be satisfactory in form and substance to ENGINEER. The schedule of values shall include quantities and unit prices aggregating the Contract Price, and shall subdivide the Work into component parts in sufficient detail to serve as the basis for progress payments during construction.

14.2 Payments for work performed are to be made by the Board of County Commissioners upon recommendation of the ENGINEER. Only one (1) progress payment will be allowed within one (1) Calendar Month. CONTRACTOR shall submit to ENGINEER for review an Application for Payment on the form supplied with the Contract Documents or an acceptable facsimile thereof. At no time shall the COUNTY make progress payments beyond the amount due for the Work performed minus five percent (5%) retainage withheld as an allowable percentage under the Local Government Prompt Payment Act. Request shall be accompanied by such supporting documentation as is required by the Contract Documents or as ENGINEER may reasonably require. If payment is requested on the basis of materials and equipment not incorporated in the Work, but delivered and suitably stored at the site or at another location agreed to in writing, the Application for Payment shall also be accompanied by such data, satisfactory to COUNTY, as will establish COUNTY's title to the material and equipment and protect COUNTY's interest therein, including applicable insurance. Each subsequent Application for Payment shall include an affidavit from CONTRACTOR stating that all previous progress payments received on account of the Work have been applied to discharge in full all of CONTRACTOR's obligations reflected in prior Applications for Payment. Three (3) signed copies of the Application for Payment are required, accompanied by the Release of Lien specified herein.

14.3 Any and all Applications for Payment must be accompanied by a partial Release of Lien (for progress payments) or a final (for final payments) Release of Lien. Such Release shall certify that all Subcontractors and Suppliers have been paid in full for all Work and supplies provided up to the date of the Application for Payment.

14.4 CONTRACTOR warrants and guarantees that title to all Work, materials and equipment covered by any Application for Payment, whether incorporated in the Project or not, will pass to COUNTY at the time of

payment free and clear of all liens, claims, security interests and encumbrances (hereafter in these General Conditions referred to as "Liens").

14.5 ENGINEER will, within ten (10) days after receipt of each Application for Payment, either indicate in writing a recommendation of payment and present the Application for Payment to COUNTY, or return the Application for Payment to CONTRACTOR indicating in writing ENGINEER's reasons for refusing to recommend payment. In the latter case, CONTRACTOR may make the necessary corrections and resubmit the Application for Payment. COUNTY shall, within the period of time specified by the Florida Statues pay CONTRACTOR the amount recommended.

14.6 ENGINEER's recommendation of final payment will constitute an additional representation by ENGINEER to COUNTY that the conditions precedent to CONTRACTOR's being entitled to final payment as set forth in Paragraph 14.13 have been fulfilled.

14.7 ENGINEER may refuse to recommend the whole or any part of any Application for Payment if, in his opinion, it would be incorrect to make such representations to COUNTY. He may also refuse to recommend any such Application for Payment, or, because of subsequently discovered evidence or the results of subsequent inspections or tests, nullify any such Application for Payment previously recommended to such extent as may be necessary in ENGINEER's opinion to protect COUNTY from loss because:

14.7.1 the Work is defective, or completed Work has been damaged requiring correction or replacement.

14.7.2 written claims have been made against COUNTY or Liens have been filed in connection with the Work.

14.7.3 the Contract Price has been reduced because of Modifications.

14.7.4 COUNTY has been required to correct defective Work or complete the Work in accordance with Paragraph 13.7.

14.7.5 of CONTRACTOR's unsatisfactory prosecution of the Work in accordance with the Contract Documents, or

14.7.6 CONTRACTOR's failure to make payment to Subcontractors, or for labor, materials, or equipment.

14.8 When CONTRACTOR considers the entire Work ready for its intended use CONTRACTOR shall, in writing to ENGINEER, certify that the entire Work is substantially complete and request that ENGINEER issue a Certificate of Substantial Completion. Within a reasonable time thereafter, CONTRACTOR and ENGINEER shall make a joint inspection of the Work to determine the status of completion. If ENGINEER does not consider the Work substantially complete, ENGINEER will notify CONTRACTOR in writing giving his reasons therefor. If ENGINEER considers the Work substantially complete, ENGINEER will prepare and deliver to COUNTY a tentative Certificate of Substantial Completion, which shall fix the date of Substantial Completion. There shall be attached to the certificate a tentative list of items to be completed or corrected before final Application for Payment.

14.9 COUNTY shall have the right to exclude CONTRACTOR from the Work after the date of Substantial Completion, but COUNTY shall allow CONTRACTOR reasonable access to complete or correct items on the tentative list.

14.10 Use by COUNTY of completed portions of the Work may be accomplished prior to Substantial Completion of all the Work subject to the following:

14.10.1 COUNTY at any time may request CONTRACTOR in writing to permit COUNTY to use any part of the Work which COUNTY believes to be substantially complete and which may be so used without significant interference with construction of the other parts of the Work. If CONTRACTOR agrees, CONTRACTOR will certify to ENGINEER that said part of the Work is substantially complete and request ENGINEER to issue a Certificate of Substantial Completion for that part of the Work. Within a reasonable time thereafter, CONTRACTOR and ENGINEER shall make an inspection of that part of the Work to determine its status of completion. If ENGINEER does not consider that part of the Work to be substantially complete, ENGINEER will notify CONTRACTOR in writing giving his reasons therefore. If ENGINEER considers that part of the Work to be substantially complete, ENGINEER will execute and deliver to COUNTY and CONTRACTOR a certificate to that effect, fixing the date of Substantial Completion as to that part of the Work, attaching thereto a tentative list of items to be completed or corrected before final Application for Payment.

14.10.2 In lieu of the issuance of a Certificate of Substantial Completion as to part of the Work, COUNTY may take over operation of the facility constituting part of the Work whether or not it is substantially complete if such facility is functionally and separately useable; provided that prior to any such takeover, COUNTY and CONTRACTOR have agreed as to the division of responsibilities between COUNTY and CONTRACTOR for security, operation, safety, maintenance, correction period, heat, utilities and insurance with respect to such facility.

14.11 Upon written notice from CONTRACTOR that the Work is complete, ENGINEER will make a final inspection with CONTRACTOR and will notify CONTRACTOR in writing of all particulars in which this inspection reveals that the Work is incomplete or defective. CONTRACTOR shall immediately take such measures as are necessary to remedy such deficiencies.

14.12 After CONTRACTOR has completed all such corrections to the satisfaction of ENGINEER, a Certificate of Final Completion has been issued, and delivered all maintenance and operating instructions, schedules, guarantees, bonds, certificates of inspection, marked-up record documents and other documents all as required by the Contract Documents, and after ENGINEER has indicated that the Work is acceptable (subject to the provisions of Paragraph 14.15), CONTRACTOR may make final Application for Payment following the procedure for progress payments. The final Application for Payment shall be accompanied by all documentation called for in the Contract Documents and such other data and schedules as ENGINEER may reasonably require, together with complete and legally effective releases or waivers (satisfactory to COUNTY) of all liens arising out of or filed in connection with the Work. In lieu thereof and as approved by COUNTY, CONTRACTOR may furnish receipts or releases in full; an affidavit of CONTRACTOR that the releases and receipts include all labor, services, material and equipment for which a Lien could be filed, and that all payrolls, material and equipment bills, and other indebtedness connected with the Work for which COUNTY or

its property might in any way be responsible, have been paid or otherwise satisfied; and consent of the Surety, if any, to final Application for Payment. If any subcontractor, manufacturer, fabricator, supplier, or distributor fails to furnish a release or receipt in full, CONTRACTOR may furnish a Bond or other collateral satisfactory to COUNTY to indemnify COUNTY against any Lien.

14.13 If, on the basis of ENGINEER's observation of the Work during construction and final inspection, and ENGINEER's review of the final Application for Payment and accompanying documentation all as required by the Contract Documents, ENGINEER is satisfied that the Work has been completed and CONTRACTOR has fulfilled all of his obligations under the Contract Documents, ENGINEER will, within ten (10) days after receipt of the final Application for Payment, indicate in writing his recommendation of payment and present the Application for Payment to COUNTY for payment. Thereupon ENGINEER will give written notice to COUNTY and CONTRACTOR that the Work is acceptable. Otherwise, ENGINEER will return the final Application for Payment to CONTRACTOR, indicating in writing the reasons for refusing to recommend final Application for Payment, in which case CONTRACTOR shall make the necessary corrections and resubmit the final Application for Payment. If the final Application for Payment and accompanying documentation are appropriate as-to-form and substance, COUNTY shall, within the time limitations set forth in Florida Statues pay CONTRACTOR the amount recommended by ENGINEER.

14.14 If, through no fault of CONTRACTOR, final completion of the Work is significantly delayed thereof and if ENGINEER so confirms, COUNTY shall upon receipt of CONTRACTOR's final Application for Payment and recommendation of ENGINEER, and without terminating the Agreement, make payment of the balance due for that portion of the Work fully completed and accepted. If the remaining balance to be held by COUNTY for Work not fully completed or corrected is less than the retainage stipulated in the Agreement, and if Bonds have been furnished, as required by Contract Document, the written consent of the Surety to the payment of the balance due for that portion of the Work fully completed and accepted shall be submitted by CONTRACTOR to ENGINEER with the Application for Payment. Such payment shall be made under the terms and conditions governing final payment, except that it shall not constitute a waiver of claims.

14.15 CONTRACTOR's obligation to perform and complete the Work in accordance with the Contract Documents shall be absolute. Neither recommendation of any progress or final payment by ENGINEER, nor the issuance of a Certificate of Substantial Completion, nor any payment by COUNTY to CONTRACTOR under the Contract Documents, nor any use or occupancy of the Work or any part thereof by COUNTY, nor any act of acceptance by COUNTY nor any failure to do so, nor the issuance of a notice of acceptability by ENGINEER pursuant to Paragraph 14.13, nor any correction of defective Work by COUNTY shall constitute an acceptance of Work not in accordance with the Contract Documents or a release of CONTRACTOR's obligation to perform the Work in accordance with the Contract Documents.

14.16 The making and acceptance of final payment shall constitute:

14.16.1 a waiver of all claims by COUNTY against CONTRACTOR, except claims arising from unsettled Liens, from defective Work appearing after final inspection or from failure to comply with the Contract Documents or the terms of any special guarantees specified therein; however, it shall not constitute a waiver by COUNTY of any rights in respect of CONTRACTOR's continuing obligations under the Contract Documents; and

14.16.2 a waiver of all claims by CONTRACTOR against COUNTY other than those previously made in writing and still unsettled.

ARTICLE 15-SUSPENSION OF WORK AND TERMINATION

15.1 SUSPENSION OF WORK: COUNTY may, at any time and without cause, suspend the Work or any portion thereof for a period of not more than ninety (90) days by notice in writing to CONTRACTOR, which shall fix the date on which Work shall be resumed. CONTRACTOR shall resume the Work on the date so fixed.

CONTRACTOR may be allowed an increase in the Contact Price or an extension of the Contract Time, or both, directly attributable to any suspension if he makes a claim therefore as provided in Articles 11 and 12.

15-2 DEFAULT AND TERMINATION OF CONTRACT

15.2.1 DETERMINATION OF DEFAULT: The following acts or omissions constitute acts of default and, except as to subparagraphs (i and k), the COUNTY will give notice, in writing, to the CONTRACTOR and his surety for any delay, neglect or default, if the CONTRACTOR:

(a) fails to begin the work under the Contract within the time specified in the Notice to Proceed;

(b) fails to perform the work with sufficient workmen and equipment or with sufficient materials to ensure prompt completion of the Contract;

(c) performs the work unsuitably, or neglects or refuses to remove materials or to perform anew such work that the ENGINEER rejects as unacceptable and unsuitable;

(d) discontinues the prosecution of the work, or fails to resume discontinued work within a reasonable time after the ENGINEER notifies the CONTRACTOR to do so;

(e) becomes insolvent or is declared bankrupt, or files for reorganization under the bankruptcy code, or commits any act of bankruptcy or insolvency, either voluntarily or involuntarily;

(f) allows any final judgment to stand against him unsatisfied for a period of ten calendar days;

(g) makes an assignment for the benefit of creditors;

(h) fails to comply with Contract requirements regarding minimum wage payments or EEO requirements;

(i) fails to comply with the ENGINEER'S written suspension of work order within the time allowed for compliance and which time is stated in that suspension of work order; or

(j) for any other cause whatsoever, fails to carry on the work in an acceptable manner, or if the surety executing the bond, for any reasonable cause, becomes unsatisfactory in the opinion of the COUNTY.

(k) fails to allow public access to all documents, papers, letters, or other material subject to the provisions of Chapter 119, Florida Statutes, made or received by the CONTRACTOR in conjunction with

this Contract. Failure to grant such public access will be grounds for immediate termination of this Contract by the COUNTY.

For a notice based upon reasons stated in subparagraphs (a) through (h) and (j): if the CONTRACTOR, within a period of ten calendar days after receiving the notice described above, fails to correct the conditions of which complaint is made, the COUNTY will, upon written certificate from the ENGINEER of the fact of such delay, neglect, or default and the CONTRACTOR'S failure to correct such conditions, have full power and authority, without violating the Contract, to take the prosecution of the work out of the hands of the CONTRACTOR and to declare the CONTRACTOR in default.

If the CONTRACTOR, after having received a prior notice described above for any reason stated in subparagraph (b), (c), (d), (e), (f) or (h), commits a second or subsequent act of default for any reason covered by the same subparagraph (b), (c), (d), (e), (f) or (h) as stated in the prior notice, and regardless whether the specific reason is the same, then, regardless of whether the CONTRACTOR has cured the deficiency stated in that prior notice, the COUNTY will, upon written certificate from the ENGINEER of the fact of such delay, neglect or default and the CONTRACTOR'S failure to correct such conditions, have full power and authority, without any prior written notice to the CONTRACTOR and without violating the Contract, to take the prosecution of the work out of the hands of the CONTRACTOR and to declare the CONTRACTOR in default.

Regarding subparagraph (i), if the CONTRACTOR fails to comply with the ENGINEER'S written suspension of work order within the time allowed for compliance and which time is stated in that suspension of work order, the COUNTY will, upon written certificate from the ENGINEER of the fact of such delay and the CONTRACTOR'S failure to correct that condition, have full power and authority, without violating the Contract, to immediately take the prosecution of the work out of the hands of the CONTRACTOR and to declare the CONTRACTOR in default.

Regarding subparagraph (k), if the CONTRACTOR fails to comply with the FDOT Standard Specifications for Road and Bridge Construction Section 3-9, the COUNTY will have full power and authority, without violating the Contract, to immediately take the prosecution of the work out of the hands of the CONTRACTOR and to declare the CONTRACTOR in default.

The COUNTY has no liability for anticipated profits for unfinished work on a Contract that the COUNTY has determined to be in default.

Notwithstanding the above, the COUNTY shall have the right to declare the CONTRACTOR (or its "affiliate") in default and immediately terminate this Contract, without any prior notice to the CONTRACTOR, in the event the CONTRACTOR (or its "affiliate") is at any time "convicted" of a "contract crime," as these terms are defined in Section 337.165(1), Florida Statutes. The COUNTY'S right to default the CONTRACTOR (or its "affiliate") for "conviction" of a "contract crime" shall extend to and is expressly applicable to any and all COUNTY Contracts that were either advertised for bid; for which requests for proposals or letters of interest were requested; for which an intent to award was posted or otherwise issued; or for which a Contract was entered into, after the date that the underlying or related criminal indictment, criminal information or other criminal charge was filed against the CONTRACTOR (or its "affiliate") that resulted in the "conviction." In the event the COUNTY terminates this Contract for this reason, the CONTRACTOR shall hereby forfeit any claims

for additional compensation, extra time, or anticipated profits. The CONTRACTOR shall only be paid for any completed work up to the date of termination. Further, the CONTRACTOR shall be liable for any and all additional costs and expenses the COUNTY incurs in completing the Contract work after such termination.

15.2.2 Termination of Contract for Convenience: The COUNTY may terminate the entire Contract or any portion thereof, if the COUNTY determines that a termination is in the COUNTY'S interest. The ENGINEER will deliver to the CONTRACTOR a Written Notice of Termination specifying the extent of termination and the effective date.

When the COUNTY terminates the entire Contract, or any portion thereof, before the CONTRACTOR completes all items of work in the Contract, the COUNTY will make payment for the actual number of units or items of work that the CONTRACTOR has completed, at the Contract unit price, and according to the formulas and provisions set forth in the FDOT Standard Specifications for Road and Bridge Construction Section 4-3.2 for items of work partially completed, and such payments will constitute full and complete compensation for such work or items. No payment of any kind or amount will be made for items of work not started. The COUNTY will not consider any claim for loss of anticipated profits, or overhead of any kind (including home office and jobsite overhead or other indirect impacts) except as provided in the FDOT Standard Specifications for Road and Bridge Construction Section 4-3.2 for partially completed work.

The COUNTY will consider reimbursing the CONTRACTOR for actual cost of mobilization (when not otherwise included in the Contract) including moving equipment to the job where the volume of the work that the CONTRACTOR has completed is too small to compensate the CONTRACTOR for these expenses under the Contract unit prices.

The COUNTY may purchase at actual cost acceptable materials and supplies procured for the work, that the COUNTY has inspected, tested, and approved and that the CONTRACTOR has not incorporated in the work. Submit the proof of actual cost, as shown by receipted bills and actual cost records, at such points of delivery as the ENGINEER may designate.

Termination of a contract or a portion thereof, under the provisions of this Subarticle, does not relieve the CONTRACTOR or the surety of its responsibilities for the completed portion of the Contract or its obligations for and concerning any just claims arising out of the work performed.

All CONTRACTOR claims for additional payment, due to the COUNTY'S termination of the entire Contract or any portion thereof, must meet the requirements of the FDOT Standard Specifications for Road and Bridge Construction Section 5-12.

15.2.3 Completion of Work by County: Upon declaration of default, the COUNTY will have full power to appropriate or use any or all suitable and acceptable materials and equipment on the site and may enter into an agreement with others to complete the work under the Contract, or may use other methods to complete the work in an acceptable manner. The COUNTY will charge all costs that the COUNTY incurs because of the CONTRACTOR'S default, including the costs of completing the work under the Contract, against the CONTRACTOR. If the COUNTY incurs such costs in an amount that is less than the sum that would have been payable under the Contract had the defaulting CONTRACTOR completed the work then the COUNTY will pay the difference to the defaulting CONTRACTOR. If the COUNTY incurs such costs in an amount that exceeds the

sum that would have been payable under the Contract, then the COUNTRACTOR and the surety shall be liable and shall pay the COUNTY the amount of the excess.

If, after the ten day notice period and prior to any action by the COUNTY to otherwise complete the work under the Contract, the CONTRACTOR establishes his intent to prosecute the work in accordance with the COUNTY'S requirements, then the COUNTY may allow the CONTRACTOR to resume the work, in which case the COUNTY will deduct from any monies due or that may become due under the Contract, any costs to the COUNTY incurred by the delay, or from any reason attributable to the delay.

ARTICLE 16-MISCELLANEOUS

16.1 Whenever any provision of the Contract Documents requires the giving of written notice it shall be deemed to have been validly given if delivered in person to the individual or to a member it is intended, or if delivered at or sent by registered or certified mail, postage prepaid, to the last business address known to the giver of the notice.

16.2 When any period of time is referred to in the Contract Documents by days, it shall be computed to exclude the first and include the last day of such period. If the last day of any such period falls on a Saturday or Sunday or on a day made a legal holiday by the law of the applicable jurisdiction, such day shall be omitted from the computation.

16.3 Should COUNTY or CONTRACTOR suffer injury or damage to his person or property because of any error, omission or act of the other party or of any of the other party's employees or agents or others for whose acts the other party is legally liable, claim shall be made in writing to the other party within a reasonable time of the first observance of such injury or damage.

16.4 The duties and obligations imposed by these General Conditions and the rights and remedies available hereunder to the parties hereto, and, in particular but without limitation, the warranties, guarantees and obligations imposed upon CONTRACTOR all of the rights and remedies available to COUNTY thereunder, shall be in addition to, and shall not be construed in any way as a limitation of, any rights and remedies available to any or all of them which are otherwise imposed or available by law or Contract, by special warranty or guarantee, or by other provisions of the Contract Documents, and the provisions of this Paragraph shall be as effective as if repeated specifically in the Contract Documents in connection with each particular duty, obligation, right and remedy to which they apply. All representations, warranties and guarantees made in the Contract Documents shall survive final payment and termination or completion of this Agreement.

7. Pricing Proposal

BID SCHEDULE A - STRUCTURAL REPAIRS AND REPLACEMENTS

Line Item	Spec.	Description	Quantity	Unit of Measure	Unit Cost	Total
1	--	GENERAL REQUIREMENTS	1	LS		
2	C-105	MOBILIZATION (10% MAXIMUM)	1	LS		
3	--	REPAIR, PATCH, OR RESTORE EXISTING ATCT CONCRETE WALLS	1	LS		
4	--	REMOVE AND REPLACE WITH NEW, ATCT TOWER CAB CATWALK WITH NEW ALUMINUM BEAMS, STRUCTURAL GRATING, AND GUARDRAILS	1	LS		
5	--	CLEAN, REMOVE CORROSION, AND INSPECT ATCT CAB/CATWALK STRUCTURAL STEEL	1	LS		
6	GP-80	CONSTRUCTION SAFETY AND PHASING PLAN COMPLIANCE (MOT)	1	LS		
TOTAL						

BID SCHEDULE A - STRUCTURAL REPAIRS AND REPLACEMENTS (ALLOWANCES)

Line Item	Spec.	Description	Quantity	Unit of Measure	Unit Cost	Total
7	--	ATCT CAB/CATWALK STRUCTURAL STEEL REPLACEMENT ALLOWANCE	1	ALLOW	$75,000.00	
TOTAL						

BID SCHEDULE B - ARCHITECTURAL REPAIRS AND REPLACEMENTS

Line Item	Spec.	Description	Quantity	Unit of Measure	Unit Cost	Total
8	--	GENERAL REQUIREMENTS	1	LS		
9	C-105	MOBILIZATION (10% MAXIMUM)	1	LS		
10	--	REMOVE AND REPLACE EXISTING ROOF SYSTEM INCLUDING INSULATION AND DRAINS	1	LS		
11	--	REMOVE AND REPLACE WITH NEW, LIGHTNING PROTECTION SYSTEM	1	LS		
12	--	REMOVE AND REPLACE METAL WALL PANEL SYSTEM AND COPING CAP	1	LS		
13	--	REMOVE AND REPLACE ROOF HATCH AND LADDER	1	LS		
14	--	REMOVE AND REPLACE HVAC CURBS	1	LS		

Line Item	Spec.	Description	Quantity	Unit of Measure	Unit Cost	Total
15	--	REMOVE AND REPLACE WINDOW SEALANT ON WINDOWS IN EXTERIOR CONCRETE WALL PANELS	1	LS		
16	--	REPAIR WINDOWS ON THE TOP FLOOR OF THE ATCT	1	LS		
17	--	REMOAVE AND REPLACE JOINT SEALANT & REPAINT ATCT EXTERIOR WALLS	1	LS		
18	--	ATCT INTERIOR REPAIRS AND REHABILITATION	1	LS		
19	--	REMOVE AND REPLACE CATWALK ACCESS DOOR	1	LS		
20	--	REMOVE AND REPLACE EXTERIOR HOLLOW METAL DOOR AND DOOR HARDWARE	1	LS		
21	GP-80	CONSTRUCTION SAFETY AND PHASING PLAN COMPLIANCE (MOT)	1	LS		
TOTAL						

BID SCHEDULE B - ARCHITECTURAL REPAIRS AND REPLACEMENTS (ALLOWANCES)

Line Item	Spec.	Description	Quantity	Unit of Measure	Unit Cost	Total
22	--	UNFORESEEN ARCHITECTURAL REPAIRS ALLOWANCE	1	ALLOW	$15,000.00	

Line Item	Spec.	Description	Quantity	Unit of Measure	Unit Cost	Total
TOTAL						

BID SCHEDULE C - MECHANICAL REPAIRS AND REPLACEMENTS

Line Item	Spec.	Description	Quantity	Unit of Measure	Unit Cost	Total
23	--	GENERAL REQUIREMENTS	1	LS		
24	C-105	MOBILIZATION (10% MAXIMUM)	1	LS		
25	--	REMOVE AND REPLACE 1-TON MINI SPLIT AHU AND CU	1	LS		
26	--	REMOVE AND REPLACE ALL PTAC UNITS	1	LS		
27	--	REMOVE AND REPLACE ROOFTOP RTU'S	1	LS		
28	--	REMOVE AND REPLACE TOWER CAB ACOUSTIC TILES & AIR TERMINAL DEVICES	1	LS		
29	--	REROUTE CONDESATE DRAIN LINES DOWN BUILDING EXTERIOR THROUGH ATCT CATWALK	1	LS		
30	GP-80	CONSTRUCTION SAFETY AND PHASING PLAN COMPLIANCE (MOT)	1	LS		
TOTAL						

BID SCHEDULE C - MECHANICAL REPAIRS AND REPLACEMENTS (ALLOWANCES)

Line Item	Spec.	Description	Quantity	Unit of Measure	Unit Cost	Total
31	--	UNFORESEEN MECHANICAL REPAIRS ALLOWANCE	1	ALLOW	$15,000.00	
TOTAL						

BID SCHEDULE D - ELECTRICAL REPAIRS AND REPLACEMENTS

Line Item	Spec.	Description	Quantity	Unit of Measure	Unit Cost	Total
32	--	GENERAL REQUIREMENTS	1	LS		
33	C-105	MOBILIZATION (10% MAXIMUM)	1	LS		
34	--	PERFORM FUNCTION TESTING OF BACKUP GENERATOR AND PROVIDE REPORT	1	LS		
35	--	REFEED ALL EXISTING OR PROPOSED MECHANICAL UNITS	1	LS		
36	--	REMOVE AND REPLACE TWO (2) BUILDING EXTERIOR LIGHTS WITH LED LIGHTS	1	LS		
37	--	INSTALL NEW LED ATCT BUILDING UPLIGHTING	1	LS		
38	--	REMOVE AND REPLACE ALL BUILDING INTERIOR LIGHT FIXTURES WITH LED EQUIVALENT	1	LS		
39	GP-80	CONSTRUCTION SAFETY AND PHASING PLAN COMPLIANCE (MOT)	1	LS		

Line Item	Spec.	Description	Quantity	Unit of Measure	Unit Cost	Total
TOTAL						

BID SCHEDULE D - ELECTRICAL REPAIRS AND REPLACEMENTS (ALLOWANCES)

Line Item	Spec.	Description	Quantity	Unit of Measure	Unit Cost	Total
40	--	UNFORESEEN ELECTRICAL REPAIRS ALLOWANCE	1	ALLOW	$15,000.00	
TOTAL						

BID SCHEDULE E - ACCESS CONTROL SYSTEM REPLACEMENT

Line Item	Spec.	Description	Quantity	Unit of Measure	Unit Cost	Total
41	--	GENERAL REQUIREMENTS	1	LS		
42	C-105	MOBILIZATION (10% MAXIMUM)	1	LS		
43	--	REMOVE AND REPLACE EXTERIOR VEHICULAR GATE ACCESS CONTROL SYSTEM	1	LS		
44	--	REMOVE AND REPLACE ATCT EXTERIOR BUILDING AND ELEVATOR ACCESS COTNROL SYSTEMS	1	LS		
45	--	PROVIDE SYNCED ACCESS CONTROL FOR EXTERIOR VEHICULAR GATE, BUILDING ACCESS, AND ELEVATOR ACCESS (SINGLE CARD SYSTEM)	1	LS		

Line Item	Spec.	Description	Quantity	Unit of Measure	Unit Cost	Total
46	GP-80	CONSTRUCTION SAFETY AND PHASING PLAN COMPLIANCE (MOT)	1	LS		
TOTAL						

BID SCHEDULE F - CIVIL/SITE IMPROVEMENTS

Line Item	Spec.	Description	Quantity	Unit of Measure	Unit Cost	Total
47	--	GENERAL REQUIREMENTS	1	LS		
48	C-105	MOBILIZATION (10% MAXIMUM)	1	LS		
49	P-632	SEAL-COAT/REJUVENATE EXISTING PARKING LOT ASPHALT PAVEMENT	3,500	SF		
50	--	RE-PAINT EXISTING BOLLARDS	2	EACH		
51	--	REMOVE, REINSTALL, AND PAINT CONCRETE PARKING BLOCKS (YELLOW)	5	EACH		
52	T-904	SODDING AND RESTORATION	1	LS		
53	GP-80	CONSTRUCTION SAFETY AND PHASING PLAN COMPLIANCE (MOT)	1	LS		
TOTAL						

PROJECT FORMS

ARTICLE 1 - INSTRUCTIONS

1.1. **The following forms and certificates are samples of those to be used by the Contractor for submissions for Contractual and administrative requirements.**

1.2. **Requirements and instructions on the forms constitute extensions of, or additions to, the Contractual conditions of the Contract and the general requirements of the specification.**

1.3. **Do not detach, or otherwise remove sample project forms from specifications.**

1.4. **Prepare all forms as required with all blank spaces filled in, in ink or typewritten.**

1.5 **Submit all Forms to the Office of the County Engineer**

ARTICLE 2 - PROJECT FORM LISTING

Part 1: Standard Contract Administration Forms

Application and Certificate for Payment (PF – 2) *(Prepared and submitted by prime contractor monthly for progress payment)*

Continuation Sheet (PF – 3) *(Prepared and submitted by prime contractor as itemized breakdown of monthly progress payment)*

Agreement Amendment (PF – 4) *(Prepared by Engineer for contract revision)*

Contractor's Affidavit for Payment of Debts and Claims (PF – 5) *(Prepared and submitted by prime contractor as part of project close-out documentation to be accompanied by separate release or waivers of lien from sub-contractors and material and equipment suppliers)*

Contractor's Affidavit of Release of Liens (Final Release) (PF – 6) *(Prepared and submitted by prime contractor as part of project close-out documentation)*

Consent of Surety Company To Final Payment (PF – 7) *(Prepared and submitted by prime contractor as part of project close-out documentation)*

Partial Release of Lien (PF – 8) *(Submitted monthly by prime contractor with each invoice beginning with the second progress payment application)*

Conditional Final Release and Waiver of Lien (PF – 9) *(Prepared and submitted by prime contractor as part of project close-out documentation)*

Final Release of Lien (PF -10) *(Prepared and submitted by prime contractor as part of project close-out documentation)*

Certificate of Substantial Completion (PF – 11) *(Prepared by Engineer)*

Certificate of Final Completion (PF – 12) *(Prepared by Engineer)*

PAYMENT APPLICATION FORM

FLAGLER COUNTY APPLICATION FOR PAYMENT NO. _____

Project Name & No.: _____

CONTRACTOR: _____
(Address:) _____
_____

ENGINEER: Flagler County Engineering Dept.
1769 E. Moody Blvd. Bldg. 2
Bunnell, Florida 32110

Payment in the amount shown is due for work performed during the period of _____ thru _____, as detail on the attached Schedule of Payments. The present status of the Account for this Contract is :

AMENDMENTS TO CONTRACT			PAYMENT DUE THIS APPLICATION	
CHANGE ORDER No.____ Approval **DATE**	**ADDITION**	**DEDUCTION**	ORIGINAL CONTRACT SUM	$
			NET REVISIONS	$
			CONTRACT SUM TO DATE	$
			TOTAL COMPLETE TO DATE	$
			Less: Retainage @ ____%	$
			EARNED LESS RETAINAGE	$
			PAYMENT FOR STORED MATERIALS	$
			TOTAL LESS RETAINAGE	$
TOTAL REVISIONS			LESS PREVIOUS PAYMENTS MADE	$

NET REVISIONS: $_____ **AMOUNT DUE THIS APPLICATION $_____**

The undersigned certifies that the Work covered by this Application for Payment has been completed in accordance with the Contract Documents and/or any Amendments thereto, that all amounts due Subcontractors and Suppliers for Work, for which previous Applications for Payment were issued and payment has been received from Flagler County, has been paid by him; that all Subcontractors and Suppliers have issued Releases of Lien and the current payment shown herein is now due.

CONTRACTOR:_____

BY: _____

SIGNED: _____

DATE: _____

Subscribed & Sworn to before me this ____day of _____, _____ .

NOTARY PUBLIC: _____

MY COMMISSION EXPIRES: _____

RECOMMENDED FOR ACCEPTANCE AND PAYMENT: _____

DATE: _____

COUNTY ENGINEER: _____

PF - 2

APPLICATION FOR PAYMENT CONTINUATION FORM

FLAGLER COUNTY - CONTRACTOR'S APPLICATION FOR PAYMENT - SHEET _____ OF _____

PROJECT NAME: _____ **PROJ. NO.:** **SCHEDULE:** _____

CONTRACTOR: _____ **COVERING PERIOD:** _____ **THRU** _____

APPLICATION No. _____ **DATE:** _____ **BY:** _____ **REVIEWED BY:** _____

ITEM		CONTRACT QUANTITY	UNIT	UNIT PRICE	QUANTITY INSTALLED & COMPLETE			DOLLAR AMOUNT		
NO.	DESCRIPTION				PREVIOUS TOTAL	THIS PERIOD	TOTAL TO DATE	PREVIOUS TOTAL	THIS PERIOD	TOTAL TO DATE

PF - 3

AMENDMENT TO AN AGREEMENT
BETWEEN FLAGLER COUNTY
AND

Contractor Name_____
Project Name_____

County Project No. _____

Flagler County, Florida, a political subdivision (COUNTY) and_____ (CONTRACTOR) hereby enter into this _____Amendment to the Agreement executed on _____.

WHEREAS, COUNTY AND CONTRACTOR have entered into an Agreement for_____ on_____ ____ ,_____.

WHEREAS, the PARTIES have entered into a _____ Amendment on _____ ____ , ____ for the purpose of:

1. The ending date for the AGREEMENT subsequent to this Amendment.

2. All Terms and Conditions of the original Contract and any subsequent amendments thereto shall remain unmodified and shall remain in full force and effect.

3. This Amendment must be accepted by the CONTRACTOR and Contract Surety and must be approved by the Flagler County Board of County Commissioners to become effective.

	AMOUNT	**TIME**
Original Contract Agreement.....	$_____	_____

CHANGES BY PREVIOUS AMENDMENTS:

NO.	**DATE APPROVED**	
_____	_____	$_____
_____	_____	$_____

TOTAL CHANGES BY AMENDMENT NO. _____ thru _____ $_____

TOTAL CONTRACT prior to this Amendment (No. ____).....$_____

TOTAL This Amendment.....$_____

NEW CONTRACT (All Amendments)..... $_____

ACCEPTANCE: (CONTRACTOR)

I (We) agree to perform the work required by this Amendment No. _____ for the amount and within the time allocated all in accordance with Contract Plans, Specifications and related Documents.

NAME:

WITNESS:_____
(Signature)

_____
(Typed or Printed)

BY: _____ **DATE:**_____
(Signature)

WITNESS:_____
(Signature)

_____
(Typed/Printed Name & Title)

_____
(Typed or Printed)

SURETY

I (We) have reviewed the foregoing Contract and Amendment and have adjusted the Contract Sureties to Conform with this Amendment.

SURETY:_____

BY:_____ DATE:_____
(Signature)

_____
(Typed/Printed Name & Title)
(Agent-In-Fact Certification Attached)

RECOMMENDED:

_____
(Signature)

_____
(Date)

_____
(Typed/Printed Name & Title)

RECOMMENDED:
Flagler County Engineering Dept.

_____

_____
(Date)

APPROVED AS TO FORM:
Flagler County Legal Dept.

_____

_____
(Date)

APPROVED: FLAGLER COUNTY

BY:_____

_____
(Date)

CONTRACTOR'S AFFIDAVIT OF PAYMENT OF DEBTS AND CLAIMS

OWNER
ENGINEER
CONTRACTOR
SURETY
OTHER

TO: (OWNER) : FLAGLER COUNTY BOARD OF COUNTY COMMISSIONERS

PROJECT NO.: _____

CONTRACT FOR: _____

CONTRACTOR (NAME, ADDRESS)

_____

_____

_____

CONTRACT DATE:_____

STATE OF: _____

COUNTY OF: _____

The undersigned, pursuant to the Standard Conditions of the Contract for Construction, hereby certifies that, except as listed below, he has paid in full or has otherwise satisfied all obligations for all materials and equipment furnished, for all work, labor, and services performed, and for all known indebtedness and claims against the Contractor for damages arising in any manner in connection with the performance of the Contract referenced above for which the Owner or his property might in any way be held responsible.

EXCEPTIONS: (If none, write "NONE". If required by the Owner, the Contractor shall furnish bond satisfactory to the Owner for each exception).

SUPPORTING DOCUMENTS ATTACHED HERETO:

1. Consent of Surety to Final Payment, Whenever Surety is involved Consent of Surety is required.

Indicate attachments (YES___) (NO ____)

The following supporting documents should be attached hereto if required by the OWNER.

1. Contractor's Release or Waiver of Liens, conditional upon receipt of Final Payment.
2. Separate Release or Waivers of Leans from Sub-contractors and material and equipment suppliers to the extent required by the Owner, accomplished by a list thereof.
3. Contractor's Affidavit of Release of Liens

CONTRACTOR:_____

ADDRESS:_____

_____

BY: _____

Subscribed and Sworn to before me this _____ Day of _____, 20__

NOTARY PUBLIC: _____

My Commission Expires:_____

CONTRACTOR'S
AFFIDAVIT OF
RELEASE OF LIENS

OWNER
ENGINEER
CONTRACTOR
SURETY
OTHER

TO: (OWNER) FLAGLER COUNTY
BOARD OF COUNTY COMMISSIONERS

PROJECT NO.: _____

CONTRACT FOR: _____

CONTRACTOR (NAME, ADDRESS)

_____

_____

_____

CONTRACT DATE:_____

STATE OF: _____

COUNTY OF: _____

The undersigned, pursuant to the Standard General Conditions of the Contract for Construction, hereby certifies that all Contractors, all Sub-contractors, all suppliers of material and equipment and all performers of work, labor or services who have or may have liens against any property of the Owner arising in any manner out of the performance of the Contact referenced above have been paid in full.

EXCEPTION: (If none, write "NONE". If required by the Owner, the Contractor shall furnish bond satisfactory to the Owner for each exception).

SUPPORTING DOCUMENTS ATTACHED HERETO:

1. Contractor's Release or Waiver of Liens, conditional upon receipt of Final Payment.

2. Separate Release or Waivers of Liens from Sub-contractors and equipment suppliers, to the extent required by the Owner, accompanied by a list thereof.

CONTRACTOR: _____

ADDRESS:_____

_____

BY: _____

Subscribed and Sworn to before me this _____Day of _____, 20___

NOTARY PUBLIC:_____

My Commission Expires:_____

CONSENT OF
SURETY COMPANY
TO FINAL PAYMENT

OWNER
ENGINEER
CONTRACTOR
SURETY
OTHER

TO: (OWNER)

FLAGLER COUNTY
BOARD OF COUNTY COMMISSIONERS

PROJECT NO.: _____

CONTRACT FOR: _____

CONTRACTOR: (NAME, ADDRESS)

CONTRACT DATE:_____

_____

_____

_____

STATE OF: _____

COUNTY OF: _____

Pursuant to § 255.05(11), Florida Statutes, and in accordance with the provisions of the Contract between the Owner and the Contractor as indicated above, the (Insert Name and Address of Surety Company)

SURETY COMPANY:

on Bond of (Insert Name and Address of Contractor)

CONTRACTOR:

hereby approves of the Final Payment to the Contractor, and agrees that Final Payment to the Contractor shall not relieve the Surety Company of any of its obligations to (Insert Name and Address of Owner).

OWNER:
Flagler County Board of County Commissioners, with an address of 1769 E. Moody Boulevard, Building 2, Bunnell, Florida 32110

as set for in the said Surety Company's Bond.

IN WITNESS WHEREOF, the Surety Company has hereunto set its hand the _____Day of _____, _____.

_____
SURETY COMPANY

ATTEST:
(SEAL)

_____
SIGNATURE OF AUTHORIZED REPRESENTATIVE

_____
TITLE

WAIVER AND RELEASE OF LIEN
UPON PROGRESS PAYMENT
"PARTIAL RELEASE OF LIEN"

The undersigned Lienor, in consideration of $_____,
_____hereby waives and releases its lien and right to
(COMPANY/CONTRACTOR)
claim a lien for labor, services, or materials furnished through _____ to _____
(DATE) *(DATE)*
to the Flagler County Board of County Commissioners on the job of

PROJECT NO. _____

PROJECT NAME: _____

to the following described property: _____

_____

(DESCRIPTION OF PROPERTY)

This waiver and release does not cover any retention or labor, services, or materials furnished after the date specified.

This Partial Release is furnished in accordance with 713.2(3), Florida Statutes.

DATED on _____, 20 ____

By:_____
(Signature of Lienor)

_____
(Printed Name & Title)

Lienor's Name and Address: _____
_____
_____

STATE OF FLORIDA
COUNTY OF _____

Sworn to (or affirmed) and subscribed before me this _____ day of _____, 20___
by _____.

_____
SIGNATURE OF NOTARY PUBLIC

_____
Print, Type or Stamp Commissioned Name

Personally Known _____ OR Produced Identification _____

Type of Identification Produced _____

PF – 8

CONDITIONAL FINAL RELEASE AND WAIVER OF LIEN

The undersigned Lienor, in consideration of $_____,
_____hereby waives and releases its lien and right to
(COMPANY/CONTRACTOR)
claim a lien for labor, services, or materials furnished through _____ to _____
(DATE) *(DATE)*
to the Flagler County Board of County Commissioners on the job of

PROJECT NO. _____

PROJECT NAME: _____

to the following described property: _____

_____
(Description of Property)

This undersigned certifies that all labor, services, and/or materials described herein have been provided to the execution and delivery of this document.

The Conditional Final Release and Lien Waiver is conditioned upon the undersigned receiving $_____ for the work described in this Release and Waiver.

The Conditional Final Release is furnished in accordance with 713.20, Florida Statutes.

DATED on _____, _____, 20 ____

By:_____
(Signature of Lienor)

_____
(Printed Name & Title)

Lienor's Name and Address: _____
_____
_____

STATE OF FLORIDA
COUNTY OF _____
Sworn to (or affirmed) and subscribed before me this _____ day of _____, 20___
by _____.

_____
SIGNATURE OF NOTARY PUBLIC

_____
Print, Type or Stamp Commissioned Name

Personally Known _____ OR Produced Identification _____

Type of Identification Produced _____

WAIVER AND RELEASE OF LIEN
UPON FINAL PAYMENT

The undersigned lienor, in consideration of the final payment in the amount of $_____, hereby waives and releases its lien and right to claim a lien for labor, services, or materials furnished to the Flagler County Board of County Commissioners on the job of

PROJECT NO.:_____

PROJECT NAME: _____

to the following described property: _____

_____
(Description of Property)

This Final Release is furnished in accordance with 713.2(5), Florida Statutes.

DATED on _____, _____, 20 ____

By:_____
(Signature of Lienor)

_____
(Printed Name & Title)

Lienor's Name and Address: _____
_____
_____

STATE OF FLORIDA
COUNTY OF _____

Sworn to (or affirmed) and subscribed before me this _____ day of _____, 20___ by _____.

_____
SIGNATURE OF NOTARY PUBLIC

_____
Print, Type or Stamp Commissioned Name

Personally Known _____ OR Produced Identification _____

Type of Identification Produced _____

PF – 10

FLAGLER COUNTY
CERTIFICATE OF SUBSTANTIAL COMPLETION

PROJECT: _____

CONTRACT DATE:_____

COUNTY PROJECT NO.: _____

This Certificate of Substantial Completion applies to:
_____ All work under Contract
_____ Portion of work described as follows:

The Work to which this Certificate applies has been inspected by authorized representatives identified below and that Work is hereby declared to be substantially complete in accordance with the Contract Documents on:_____
(DATE)
A tentative list of items to be completed or corrected is attached hereto. This list may not be all-inclusive, and the failure to include an item in it does not alter the responsibility of Contractor to complete all the Work in accordance with the Contract Documents. The items in the tentative list shall be completed or corrected by the Contractor.

SIGNED:

CONTRACTOR: _____

By: _____ Date:_____

FLAGLER COUNTY CONSTRUCTION ENGINEERING & INSPECTION (CEI)
(CEI FIRM)_____

By: _____ Date:_____

FLAGLER COUNTY PROJECT MANAGER

By: _____ Date:_____

OTHER_____

By: _____ Date:_____

OTHER_____

By: _____ Date:_____

TENTATIVE LIST OF ITEMS TO BE COMPLETED OR CORRECTED
(PUNCH LIST)

PROJECT: _____ DATE:_____

COUNTY PROJECT NO.: _____

CONTRACTOR: _____

This list may not be all-inclusive, and the failure to include an item does not alter the responsibility of the Contractor to complete all the Work in accordance with the Contract Documents.

ITEM NO.	DESCRIPTION

FLAGLER COUNTY
CERTIFICATE OF FINAL COMPLETION

PROJECT: _____

CONTRACT DATE:_____

COUNTY PROJECT NO.: _____

This Certificate of Final Completion applies to:
_____ All work under Contract
_____ Portion of work described as follows:

The Work to which this Certificate applies has been inspected by authorized representatives identified below and that Work is hereby declared to be complete in accordance with the Contract Documents on:_____
(DATE)
The tentative list (punch list) of items to be completed or corrected provided with the Certificate of Substantial Completion has been addressed. Failure to have included an item in the does not alter the responsibility of Contractor to complete all the Work in accordance with the Contract Documents.

The date of Final Completion is the date upon which all guarantees and warranties begin.

FINAL COMPLETION DATE:_____

SIGNED:

CONTRACTOR: _____

By: _____ Date:_____

FLAGLER COUNTY CONSTRUCTION ENGINEERING & INSPECTION REPRESENTATIVE: _____

By: _____ Date:_____

FLAGLER COUNTY PROJECT MANAGER

By: _____ Date:_____

OTHER_____

By: _____ Date:_____

STATE OF FLORIDA DEPARTMENT OF TRANSPORTATION

CERTIFICATION
DISBURSEMENT OF PREVIOUS PERIODIC PAYMENT TO SUBCONTRACTORS

(As required by Florida Transportation Code, Section 337.11, Subsection (11), F.S.)

DATE _____

FIN PROJ. I.D. _____

CONTRACT NO. _____

TO RELEASE MONTHLY PAYMENT FOR _____

_____, prime contractor for the above referenced contract, hereby certifies that all subcontractors, except for those noted below, having interest in this contract have received their pro rata share of all previous periodic payments made to date by the Department for all work, materials and equipment furnished under the contract. The term "subcontractor", as used herein, shall also include persons or firms furnishing materials, services or equipment incorporated into the work or stockpiled in the vicinity of the project for which partial payment has been made by the Department and work done under equipment-rental agreements.

EXCEPTION:
The following subcontractors have not been paid and a copy of the notification sent to each, explaining the good cause why payment has not been made, is attached to this form:

_____ Subcontractor name	_____ Subcontractor name
_____ Street Address	_____ Street Address
_____ City State Zip	_____ City State Zip

State of Florida
County of _____
Sworn to and subscribed before me this _____ day
of _____, _____, by _____
(Print name of person signing Certification)

A false statement or omission made in connection with this certification is sufficient cause for suspension, revocation, or denial of qualification to bid, and a determination of non-responsibility, and may subject the person and/or entity making the false statement to any and all civil and criminal penalties available pursuant to applicable Federal and State Law.

_____
Notary Public, not required when digital

_____
Commission Expires

Personally Known ☐ OR Produced Identification ☐

Type of Identification Produced _____

_____
Contractor

_____
By

_____
Title

Instructions:

1. Attach copy of the notification good cause sent to each applicable subcontractor.
2. List the subcontractors which have not been paid the proportionate share of payments received by the contractor and the date listed as exception.
3. A separate certification is required for each contract.
4. To be signed by an officer or director of the Contractor with the authority to bind the Contractor and notarized.
5. To avoid delay in payment, certification must be submitted to the Project Engineer no later than the Friday before the monthly estimate cutoff date (generally the 3rd Sunday of the month).

CONSTRUCTION COMPLIANCE WITH SPECIFICATIONS AND PLANS

FIN PROJECT I.D.(s)

DATE: _____

CONTRACT NO: _____

Monthly: ☐

Final: ☐

_____, Prime Contractor for the above referenced contract, hereby verifies based on personal knowledge or reasonable investigation and good faith belief, all Quality Control functions and Quality Control sampling and testing results are in substantial compliance with the contract specification requirements and the approved Quality Control Plan for this project. This includes the input of test results into the Department's MAC database within 24 hours of results being received. This represents work done between _____ and _____ . Exceptions to these requirements are listed below.

1.) Item No.: _____
Exception:

2.) Item No.: _____
Exception:

3.) Item No.: _____
Exception:

4.) Item No.: _____
Exception:

CONSTRUCTION COMPLIANCE WITH SPECIFICATIONS AND PLANS

5.) Item No.: _____
Exception:

6.) Item No.: _____
Exception:

A false statement or omission made in connection with this certification is sufficient cause for suspension, revocation, or denial of qualification to bid, and a determination of non-responsibility, and may subject the person and/or entity making the false statement to any and all civil and criminal penalties available pursuant to applicable Federal and State Law.

State of Florida
County of _____
Sworn to and subscribed before me this _____ day
of _____, _____, by _____
(Print name of person signing Certification)

_____
Notary Public (Not Required when Digital)

_____
Commission Expires

Personally Known _____ or Produced Identification _____
Type of Identification Produced _____

_____
Quality Control Manager

_____
Company

_____
Signed By

State of Florida
County of _____
Sworn to and subscribed before me this _____ day
of _____, _____, by _____
(Print name of person signing Certification)

_____
Notary Public (Not Required when Digital)

_____
Commission Expires

Personally Known _____ or Produced Identification _____
Type of Identification Produced _____

_____
Contractor

_____
Title

_____
Signed By

Instructions for Construction Compliance with Specifications and Plans (Form # 700-020-02**)**

Financial Project Number(s): List all financial project numbers on the contract.

Date: Show the date the certification is completed.

Contract No.: Show the contract number the certification represents.

Monthly/Final: Indicate which type of estimate this certification represents, monthly or final.

Prime Contractor: In this field, show the Prime Contractor's full company name.

Date Began: Show the beginning date the certification represents. For a monthly or progress estimate, show the beginning date for the estimate period. For a final certification, show the date the contract work began.

Date Ended: Show the ending date for the estimate period. For final certification, show the final acceptance date.

Item No.: Show the pay item number the exception is associated with.

Exceptions:

For the monthly certification, list the following:

1. QC samples that did not compare with VT samples and had VT results upheld by RT samples.
2. Any samples that had Engineering Analysis Report or Delineation Test(s) performed.
3. Any failed QC samples.
4. Any QC samples that do not have results entered into MAC.
5. Any QC samples that were performed by unqualified technicians or laboratories.
6. Any materials placed without an approved QC Plan or when the QC Plan is suspended.
7. Any materials provided from an unapproved producer or supplier.
8. Results of any failing Chloride content limits as defined in Specification 346-4.2.

The following **would not** be listed as an exception on the subject form:

1. QC samples that have been tested but not verified.
2. QC samples that have been tested and had verification test results that did not compare.

For the final certification, **all exceptions** to QC sampling and testing **must** be shown on the certification**.**

Notary Information: The Notary of the Public completes this section. This certification must be notarized.

Quality Control Manager: Name of the Quality Control Manager that will sign the certification.

Company: Enter the name of the company the Quality Control Manager is employed by.

Signed By: To be signed by the "Quality Control Manager".

Contractor: Name of an officer or director of the Contractor with an authority to bind the Contractor.

Title: Enter the title of the person signing the certification.

Signed By: To be signed by the person's name under the "Contractor" section.

It is not the Department's intent for Contractors to list as exceptions samples and results for which they are not responsible, such as verification and independent verification samples and test results. Additionally, the Department will accept exports of the Sample Search Results in MAC, as an attachment, to assist in documenting the status of samples.

MAINTENANCE OF TRAFFIC (MOT) INSPECTION REVIEW REPORT

Evaluation: Initial Comprehensive Weekly Report

A) Report No.: _____ B) Contract No.: _____ C) Fin No.: _____

D) Federal Aid Project No.: _____ E) Prime Contractor: _____

F) Date of Review: _____

G) Current Project Phase: 1, 2, 3, etc. _____ H) Project Location: _____

I) Areas to be Reviewed:

AREA NO. 1 – TRAFFIC CONTROL PLAN	**Y**	***N**	**N/A**	**DC**	**REMARKS**
A. TCP/ALTERNATE TCP MODIFICATIONS HAVE BEEN APPROVED	☐	☐	☐		
B. SIGNING AND PAVEMENT MARKINGS INSTALLED ACCORDING TO APPROVED TCP	☐	☐	☐		
C. SIDE STREETS PROPERLY SIGNED	☐	☐	☐		
D. ALL DEVICES USED FOR SPEED LIMIT REDUCTIONS WERE INSTALLED IN ACCORDANCE WITH APPROVED TCP	☐	☐	☐		
E. NEEDED TURN LANES IN PLACE	☐	☐	☐		
AREA NO. 2 - GENERAL	**Y**	***N**	**N/A**	**DC**	**REMARKS**
A. SIGNS CORRECT HEIGHT & OFFSET	☐	☐	☐		
B. SIDEWALK CLOSED/SCHOOL MARKING/CROSSWALK SIGNS PLACED PROPERLY	☐	☐	☐		
C. DRIVEWAYS, BUSINESS ENTRANCES & MEDIAN ACCESS ARE INSTALLED IN ACCORDANCE WITH APPROVED TCP	☐	☐	☐		
D. SIGNAL TIMING/PHASING ARE IN ACCORDANCE WITH APPROVED TCP	☐	☐	☐		
E. SUFFICIENT ADVANCED WARNING SIGNS IN PLACE	☐	☐	☐		
F. EXISTING SIGNS NOT IN USE WERE REMOVED OR COVERED	☐	☐	☐		
G. SUFFICIENT DEVICES TO GUIDE TRAFFIC THROUGH THE WORK AREA	☐	☐	☐		
H. ROADWAY SURFACE MAINTAINED SATISFACTORILY	☐	☐	☐		
I. MESSAGE BOARDS CONVEY CONCISE MESSAGE TO MOTORISTS	☐	☐	☐		
J. PROJECT INFORMATION SIGNS INSTALLED CORRECTLY	☐	☐	☐		
K. APL NUMBERS PROPERLY MARKED ON DEVICES	☐	☐	☐		
L. MAS SYSTEM PROPERLY INSTALLED AND FUNCTIONING (IF APPLICABLE)	☐	☐	☐		
AREA NO. 3 – NIGHT WORK	**Y**	***N**	**N/A**	**DC**	**REMARKS**
A. LIGHTING PLAN APPROVED	☐	☐	☐		
B. PORTABLE CHANGEABLE MESSAGE SIGN WARNING LIGHTED WORK ZONE AHEAD	☐	☐	☐		
C. VEHICLES/EQUIPMENT HAVE FLASHING LIGHTS AND/OR REFLECTIVE SHEETING	☐	☐	☐		
D. PILOT VEHICLE WITH FLASHING LIGHTS AND MESSAGE BOARD	☐	☐	☐		
E. LIGHTING AIMED NOT TO IMPEDE TRAFFIC	☐	☐	☐		
AREA NO. 4 – CLEAR ZONE/HAZARDS	**Y**	***N**	**N/A**	**DC**	**REMARKS**
A. NO EQUIPMENT/MATERIALS/HAZARDS STORED IN CLEAR ZONE	☐	☐	☐		
B. DROP-OFFS AND ABOVE GROUND HAZARDS ARE PROTECTED IN ACCORDANCE WITH APPROVED TCP AND DESIGN STANDARDS	☐	☐	☐		
AREA NO. 5 – TEMPORARY PAVEMENT MARKINGS	**Y**	***N**	**N/A**	**DC**	**REMARKS**
A. CORRECT APPLICATIONS AND WIDTH	☐	☐	☐		
B. REFLECTIVITY CONDITION SATISFACTORY (TAPE/PAINT/MESSAGES)	☐	☐	☐		
C. CONFLICTING MARKINGS AND PAVEMENT DEBRIS PROPERLY REMOVED	☐	☐	☐		

MAINTENANCE OF TRAFFIC (MOT) INSPECTION REVIEW REPORT

AREA NO. 6 – TEMPORARY BARRIER WALL	Y	*N	N/A	DC	REMARKS
A. BARRIER CONNECTED AND ANCHORED IN ACCORDANCE WITH APPROPRIATE DESIGN STANDARD	☐	☐	☐		
B. TRANSITION and OVERLAPS INSTALLED PER DESIGN STANDARDS	☐	☐	☐		
C. CRASH CUSHIONS INSTALLED CORRECTLY AND PROPERLY MAINTAINED	☐	☐	☐		
D. PROPER OFFSET AND DEFLECTION SPACE MAINTAINED	☐	☐	☐		
AREA NO. 7 – FLAGGERS	**Y**	***N**	**N/A**	**DC**	**REMARKS**
A. LIST OF TRAINED FLAGGERS SUBMITTED TO PROJECT ADMINISTRATOR BEFORE CONSTRUCTION BEGINS	☐	☐	☐		
B. FLAGGER AHEAD SIGN INSTALLED PROPERLY	☐	☐	☐		
C. FLAGGER WEARING APPROVED SAFETY VEST/USING PROPER STOP/SLOW PADDLE	☐	☐	☐		
D. FLAGGER STATION HAS PROPER LIGHTING FOR NIGHT WORK	☐	☐	☐		
AREA NO. 8 – LANE CLOSURES	**Y**	***N**	**N/A**	**DC**	**REMARKS**
A. PROPER TRANSITION, SIGHT DISTANCE and BUFFER SPACE	☐	☐	☐		
B. PROPER DEVICE SPACING AND VISIBILITY	☐	☐	☐		
C. PAVEMENT MARKINGS PLACED CORRECTLY	☐	☐	☐		
D. PROPER MERGING	☐	☐	☐		
AREA NO. 9 – DETOURS	**Y**	***N**	**N/A**	**DC**	**REMARKS**
A. DETOURS INSTALLED IN ACCORDANCE WITH APPROVED TCP WITH PROPER SIGNING AND PAVEMENT MARKINGS	☐	☐	☐		
B. SPECIAL DETOURS (I.E. LANE SHIFTS or DIVERSIONS) ARE PROPERLY INSTALLED	☐	☐	☐		
AREA NO. 10 – PEDESTRIAN/BICYCLIST ACCOMMODATIONS	**Y**	***N**	**N/A**	**DC**	**REMARKS**
A. PEDESTRIAN DETOURS and DIVERSIONS INSTALLED PER TCP	☐	☐	☐		
B. TEMPORARY WALKWAYS HAVE PROPER SIGNING AND ADA COMPLIANT	☐	☐	☐		
C. PEDESTRIAN LCDs PROPERLY INSTALLED	☐	☐	☐		
D. EXISTING, NEW, and TEMPORARY CURB RAMPS HAVE DETECTABLE WARNINGS	☐	☐	☐		
AREA NO. 11 – BUSINESS ACCOMMODATIONS	**Y**	***N**	**N/A**	**DC**	**REMARKS**
A. VEHICLE AND PEDESTRIAN ENTRANCES MAINTAINED WITH PROPER DEVICES, SIGNING AND VISIBILITY	☐	☐	☐		

AREA NO. 12 – TRAFFIC CONTROL DEVICES

TYPE	VISIBLE			DEVICES CLEAN			SPACED PROPERLY			NOT MIXED			WORKING (%)	REFL			COLOR			REMARKS/DATE CORRECTED
	Y	*N	N/A	Y	*N	N/A	Y	*N	N/A	Y	*N	N/A		Y	*N	N/A	Y	*N	N/A	
CONES	☐	☐	☐	☐	☐	☐	☐	☐	☐	☐	☐	☐		☐	☐	☐	☐	☐	☐	
DRUMS	☐	☐	☐	☐	☐	☐	☐	☐	☐	☐	☐	☐		☐	☐	☐	☐	☐	☐	
BARRICADES	☐	☐	☐	☐	☐	☐	☐	☐	☐	☐	☐	☐		☐	☐	☐	☐	☐	☐	
FIXED CHANNELIZING DEVICES	☐	☐	☐	☐	☐	☐	☐	☐	☐	☐	☐	☐		☐	☐	☐	☐	☐	☐	
SIGNS	☐	☐	☐	☐	☐	☐	☐	☐	☐	☐	☐	☐		☐	☐	☐	☐	☐	☐	
RPM's	☐	☐	☐	☐	☐	☐	☐	☐	☐	☐	☐	☐		☐	☐	☐	☐	☐	☐	
ARROW BOARD	☐	☐	☐	☐	☐	☐	☐	☐	☐	☐	☐	☐		☐	☐	☐	☐	☐	☐	
PCMS	☐	☐	☐	☐	☐	☐	☐	☐	☐	☐	☐	☐		☐	☐	☐	☐	☐	☐	
RADAR SPEED DISPLAY UNIT	☐	☐	☐	☐	☐	☐	☐	☐	☐	☐	☐	☐		☐	☐	☐	☐	☐	☐	
STOP/SLOW PADDLE	☐	☐	☐	☐	☐	☐	☐	☐	☐	☐	☐	☐		☐	☐	☐	☐	☐	☐	
PEDESTRIAN LCDs	☐	☐	☐	☐	☐	☐	☐	☐	☐	☐	☐	☐		☐	☐	☐	☐	☐	☐	

Senior Project Engineer/Project Administrator

Signature

MAINTENANCE OF TRAFFIC (MOT) INSPECTION REVIEW REPORT

FORM INSTRUCTIONS: The Senior Project Engineer/Project Administrator will complete the MOT Inspection Review Report that will cover weekly daytime and night time inspections for projects. Notify the WTS to correct all safety deficiencies immediately. The WTS shall not allow minor deficiencies that are not safety hazards to remain uncorrected for more than 24 hours.

A) The Senior Project Engineer/Project Administrator shall use consecutive numbers for each report completed for each project.

B) Contract Number.

C) Financial Project Identification Number.

D) Federal Aid Project Number.

E) Prime Contractor's Name.

F) Date of review.

G) MOT work phase at time of review.

H) Project Location (State Road Number, County Road Number, etc).

I) The conditions (areas 1-12) that must be reviewed in the field with the boxes checked showing the compliant/non-compliant areas in the Work Zone. **Enter the date when the deficiencies were corrected (DC).** Use the remarks column to summarize the deficiency.

J) Printed name and signature of Senior Project Engineer/Project Administrator.

Stormwater Pollution Prevention Plan Inspection Report Form

Inspections must occur at least once a week and within 24 hours of the end of a storm event that is 0.50 inches or greater.

Project Name:_____ FDEP NPDES Stormwater Identification Number: FLR10_____

Location	Rain data	Type of control (see below)	Date installed / modified	Current Condition (see below)	Corrective Action / Other Remarks

Condition Code:

G = Good M = Marginal, needs maintenance or replacement soon P = Poor, needs immediate maintenance or replacement

C = Needs to be cleaned O = Other

Control Type Codes

1. Silt Fence	10. Storm drain inlet protection	19. Reinforced soil retaining system	28. Tree protection
2. Earth dikes	11. Vegetative buffer strip	20. Gabion	29. Detention pond
3. Structural diversion	12. Vegetative preservation area	21. Sediment Basin	30. Retention pond
4. Swale	13. Retention Pond	22. Temporary seed / sod	31. Waste disposal / housekeeping
5. Sediment Trap	14. Construction entrance stabilization	23. Permanent seed / sod	32. Dam
6. Check dam	15. Perimeter ditch	24. Mulch	33. Sand Bag
7. Subsurface drain	16. Curb and gutter	25. Hay Bales	34. Other
8. Pipe slope drain	17. Paved road surface	26. Geotextile	
9. Level spreaders	18. Rock outlet protection	27. Rip-rap	

Inspector Information:

_____ _____ _____

Name Qualification Date

The above signature also shall certify that this facility is in compliance with the Stormwater Pollution Prevention Plan and the State of Florida Generic Permit for Stormwater Discharge from Large and Small Construction Activities if there are not any incidents of non-compliance identified above.

* * * * * *

"I certify under penalty of law that this document and all attachments were prepared under my direction or supervision in accordance with a system designed to assure that qualified personnel properly gathered and evaluated the information submitted. Based on my inquiry of the person or persons who manage the system, or those persons directly responsible for gathering the information, the information submitted is, to the best of my knowledge and belief, true, accurate, and complete. I am aware that there are significant penalties for submitting false information, including the possibility of fine and imprisonment for knowing violations."

_____ _____

Name (Responsible Authority) Date

CONTRACT
FOR
26-ITB-018 Air Traffic Control Tower Rehabilitation

This Contract, entered into this _____ day of _____, 20___ by and between the Flagler County Board of County Commissioners, hereinafter called the **COUNTY**, and _____ , hereinafter called the **CONTRACTOR**.

WITNESSETH: That the **COUNTY** agrees with the **CONTRACTOR**, as follows:

1. The Contract shall consist of the following, all of which are hereby made a part thereof:

   a. Advertisement for Bids, Instructions to Bidders, Bidders Check List, Standard General Conditions, Standard Terms and Conditions and the Bid with any accompanying documents.

   b. Plans and Specifications, Special Provisions, Technical Specifications, Project Permits, any Addendum (No. __) or other information provided to the prospective bidders prior to receipt of bids.

   c. Bid Bond and Payment and Performance Bond

   d. Insurance Certificate(s)

   e. Project Forms

2. The **CONTRACTOR** agrees to furnish all labor, equipment, material and the skill necessary for the complete work as set forth in the component parts of the Contract, now on file in the Office of the Clerk of the Circuit Court at the Flagler Courthouse, Bunnell, Florida, described herein and to the satisfaction of the **COUNTY** or its duly authorized representative.

3. The **CONTRACTOR** agrees to commence the work to be done under this Contract on the date to be specified in the Notice to Proceed and fully complete all work hereunder within Two Hundred Forty (240) calendar days from the date set forth in the Notice-to-Proceed as completion date.

4. The **COUNTY** agrees to pay the **CONTRACTOR** for the faithful performance under this Contract the approximate amount of _____ ($_____) based on the estimated quantities and unit or lump sum prices contained herein and subject to additions or deductions as herein provided.

ATTEST:

FLAGLER COUNTY BOARD OF COUNTY COMMISSIONERS

_____
Tom Bexley, Clerk of the Circuit Court and Comptroller

_____
Leanne Pennington, Chair

APPROVED–AS-TO-FORM

_____
Sean Moylan, Deputy County Attorney

ATTEST:

CONTRACTOR:

BY: _____
(Signature)

BY: _____
(Signature)

_____
(Typed or Printed Name)

_____
(Typed or Printed Name)

_____
(Title)

_____
(Title)

CORPORATE SEAL:

BOND NO. _____

PAYMENT AND PERFORMANCE BOND

KNOW ALL MEN BY THESE PRESENTS, that we _____, hereinafter called "Principal", with a principal business address at _____, and a phone number of _____, and _____, duly authorized to do business in the State of Florida, pursuant to the laws of the State of Florida, hereinafter called "Surety", are each held and firmly bound unto the Flagler County Board of County Commissioners, 1769 E. Moody Boulevard, Building No. 2, Bunnell, Florida 32110, and a phone number of (386) 313-4001, hereinafter called "**Owner**", and as an additional oblige the State of Florida Department of Transportation, in the penal sum of _____ ($_____), lawful money of the United States of America, to be paid to Owner, to which payment well and truly be made we bind ourselves, our heirs, executors, personal representatives, successors, and assignees, jointly and severally and firmly by these presents.

Whereas, Principal has entered into an Agreement, with an effective date of ____ day of _____ , 20__, with Owner for accomplishing the construction of the Project known as **"26-ITB-018 Air Traffic Control Tower Rehabilitation"** in accordance with the Contract Documents related thereto, which Agreement is on file in the Office of the Clerk of Circuit Court at the Flagler County Courthouse, Bunnell, Florida, and which Agreement is incorporated herein by reference and made a part hereof (hereinafter, the "Agreement").

NOW THEREFORE, THE CONDITION OF THIS BOND IS SUCH THAT IF THE PRINCIPAL in all respects shall comply with Section 337.18(1), Florida Statutes, and shall promptly, faithfully, efficiently, and fully perform the Agreement, and any alterations as may be made in said Agreement as provided for therein, and within the time period specified, and further, shall remedy any errors in partial or final estimates and any defects which may exist, appear, occur or result in or from said work within a period of one (1) year, or other period otherwise specified in the Agreement, from the date of final acceptance of the work under the Agreement, and further if the Principal shall promptly make payment to all persons furnishing labor, material, equipment, and supplies, and all persons defined in Section 713.01, Florida Statutes, whose claims derive directly or indirectly from the prosecution of the work provided for in the Agreement (See Section 337.18(1)(a) through(f), Florida Statutes, for specific "claim" notice and time limitation requirements), and shall promptly pay all State Workers' Compensation and Unemployment Compensation taxes incurred in the performance of the Agreement, and shall be liable to the State of Florida in a civil action instituted by the Owner, Flagler County Board of County Commissioners, the Department of Transportation or any officer of the State of Florida authorized in such cases for double any amount in money or property the State of Florida may lose or be overcharged or otherwise defrauded of, by reason of any wrongful or criminal act, if any, of the Principal, its agents, and employees, and should the Principal not be declared to be in default under the Agreement, then the Bond shall be deemed void. In the event of default by the Principal, the Surety shall pay the Owner in addition to the above obligations, all liquidated damages and disincentives assessed against the Principal because of the default which were not withheld from Agreement proceeds and if the Owner at its sole option demands that the Surety take over the project, then in such event, the Surety may not select the Principal or any affiliate of the Principal to complete the project for and on behalf of the Surety without the Owner's express written consent and, finally if the subject Agreement required contractor qualification, under Section 337.14, Florida Statutes, or otherwise, the Surety must use a qualified contractor, who is approved by the Owner to perform the work. It is further covenanted and agreed that any alterations or additions made under this Agreement or in the work to be performed therein or the granting of any extension of time for the performance of the Agreement or any other forbearance by or on the part of

either the Owner or the Principal shall not in any way release the Principal and the Surety or either of them, their respective heirs, executors, administrators, successors, or assigns, from any liability hereunder. Notice to the Surety of such alterations, extension, or forbearance is hereby specifically waived. Under this Bond, the Surety, pursuant to Section 337.11(9)(a), Florida Statutes, shall be fully liable under such surety bond to the full extent of any modified contract amount up to and including 25 percent over the original contract amount and without regard to the fact that the Surety was not aware of or did not approve such modifications. However, if modifications of the original contract amount cumulatively result in modifications of the contract amount in excess of 25 percent of the original contract amount, the Surety's approval shall be required to bind the Surety under the Bond on that portion in excess of 25 percent of the original contract amount. This obligation shall remain in full force and effect until the full performance of all covenants, terms, and conditions herein stipulated. Failure by the Surety to perform obligations under the terms of this Bond may result in the Surety being disqualified from issuing bonds for future Owner contracts.

WITNESS the signature of the Principal and the signature of the Surety by _____ its _____ (Agent or Attorney-In-Fact) with the seals of the Principal and Surety hereunto affixed this _____ day of _____, 20____.

PRINCIPAL:_____
(Typed or Printed Name of Company)

WITNESS:_____ **BY:_____**
(Signature) **(Authorized Signature)**

_____ _____
(Typed or Printed Name) **(Typed or Printed Name)**

_____
(Title)

WITNESS:_____
(Signature)

_____
(Typed or Printed Name)

STATE OF _____

COUNTY OF _____

The foregoing instrument was acknowledged before me this ____ day of _____, 20___, by _____ (officer's name), as _____ (title) of _____ (company name), a _____ (state) _____ (corporation, limited liability corporation), who swore or affirmed that he/she is authorized to execute this Bond and to bind _____ (company name), a _____ (state) _____ (corporation, limited liability corporation).

_____ is personally known to me or has produced
_____ as identification and who did (did not) take an oath.

My Commission Expires: _____

Signature of Notary: _____
Printed: _____

(Affix Official Seal) Notary Public

Commission No. _____

SURETY:_____
(Typed or Printed Company Name)

_____

_____
(Business Address)

_____
(Surety Authorized Signature)

_____
(Printed Name)

Witness as to Surety _____
(Signature)

_____
(Printed Name)

Witness as to Surety _____
(Signature)

_____
(Printed Name)

OR

_____
As Attorney in Fact (Signature) (Attach Power)

_____
(Printed Name)

_____
(Business Address)

_____
(Telephone Number)

Witnessed by: _____
(Signature)

_____
(Printed Name)

Witnessed by: _____
(Signature)

_____
(Printed Name)

STATE OF _____

COUNTY OF _____

The foregoing instrument was acknowledged before me this ____ day of _____, 20___, by _____ (officer's name), as _____ (title) of _____ (company name), a _____ (state) _____ (corporation, limited liability corporation), who swore or affirmed that he/she is authorized to execute this Bond and to bind _____ (company name), a _____ (state) _____(corporation, limited liability corporation). _____ is personally known to me or has produced _____ as identification and who did (did not) take an oath.

My Commission Expires: _____

Signature of Notary: _____

Printed: _____

(Affix Official Seal) Notary Public

Commission No. _____

The Principal shall record this bond in the official records of the Clerk of Court of Flagler County prior to commencing the work.

NOTE: DATE OF BOND MUST NOT BE PRIOR TO DATE OF CONTRACT EXECUTION

Purchase Order (PO) Terms and Conditions

Providing any goods or service authorized by the PO constitutes acceptance of this entire PO without exception.

This PO authorizes delivery of the listed items or services. If a solicitation number is referenced, the terms and conditions of said solicitation become part of this PO. Deviation from prices on the PO is not permitted without a signed, corrected PO or Change Order. The "Provider" herein is the vendor of the goods or service under the approved PO.

Delivery. Shipping is defined as ***Freight on Board (FOB) Destination, Freight Allowed***. Title and risk of loss shall pass when items have been received, inspected, and accepted by Flagler County ("County"). All associated shipping, insurance, and other related costs shall be borne by the Provider.

Discontinued. Provider shall give County thirty (30) days advance notice of a discontinued item(s) so that County can purchase additional quantities of discontinued item(s). County must give written approval of replacement(s) if they exceed previous price or fail to meet quality, form, fit, or function of the discontinued item. Time is of the essence regarding Performance of Services and this PO can be terminated by the County for convenience, non-appropriation of funds, or non-performance.

Disputes. If such dispute arises under this PO and is not resolved informally by the parties within five (5) business days, the party bringing a claim ("Disputing Party") shall deliver to the first level representative of the other party a written statement ("Dispute Notice") describing the dispute. If the respective representatives cannot resolve the dispute within ten (10) days, the dispute shall be escalated through two higher levels of management. If the dispute has not been resolved within twenty-five (25) calendar days after delivery of the Disputing Party's notice, either party may give written notice to the other party declaring the resolution process terminated and pursue other legal recourse or initiate formal non-binding mediation before a single mediator, which shall be completed within thirty (30) days of initiation, in accordance with rules of practice and procedure adopted by the Supreme Court of Florida for court-ordered mediation, Rule 1.700, et seq., of the Florida Rules of Civil Procedure, and Chapter 44, Florida Statutes. If the dispute remains unresolved after conducting such mediation, then either party may proceed to finalize such termination remedies and commence litigation in a court of competent jurisdiction.

Governing Law/Jurisdiction/Venue. This PO shall be governed by the laws of the State of Florida and the venue for any litigation arising from this PO shall be in Flagler County, Florida. The parties to this PO knowingly, voluntarily and intentionally waive their rights to a jury trial. Each party agrees to bear its own costs and attorneys' fees relating to any dispute arising under this PO. The Provider shall comply with all applicable laws and regulations.

Insurance. For goods and services delivered or performed by Provider on County premises, Provider certifies it maintains comprehensive general liability, worker's compensation ***(or state-issued exemption)*** and auto insurance in the amounts acceptable to the County thereto pertaining to this PO, *and* from an A.M. Best "A— "or better rated insurance firm authorized by the State of Florida Insurance Commissioner. The County reserves the right to require that "Flagler County" be named as additional insured for projects when deemed necessary. For services performed off County premises and goods delivered by third-party carriers, the Provider shall use such carriers that maintain such insurance coverage as set forth above.

Intellectual Property. Provider agrees to protect, defend, indemnify, and save the County, its agents, officials, including elected officials, and employees of the County harmless from and against any and all claims, demands, actions, and causes of action which may arise asserting that a copyright, trademark, trade secret, or patent (collectively "Intellectual Property), as provided under this PO, infringes or misappropriates any third party's intellectual property. If Provider must pay a third party any license, royalty, or other such usage fee in order to deliver the item(s) under this PO, such third party and usage fee must be specified in the Provider's offer to sell to the County.

Indemnification. The Provider shall, at Provider's expense, indemnify, defend, and hold harmless the County, its officers, agents, and employees from or on account of any and all claims, actions, lawsuits, losses, expenses, injuries, damages, judgments, or liabilities of any kind whatsoever resulting from, arising out of, allegedly arising out of, or in connection with the Provider's performance or nonperformance of services pursuant to this PO, whether said services are performed by the Provider, its agents, sub-agents, subcontractors, suppliers, appointees, or employees, or on behalf of the Provider, unless said claims, actions, lawsuits, losses, expenses, injuries, damages, judgments, or liabilities result from, arise out of, or are in connection with the actions of the County, its officers, agents, or employees, for the sole benefit of the County and unrelated to the Provider's performance or nonperformance of its services under this PO.

Modification & Assignment. The County may unilaterally change, at no additional cost, the quantity and receiving point within the County for items not yet shipped. All other items must be mutually agreed upon in writing. County is not required to pay for defective items, back-orders, late deliveries, those quantities exceeding the PO quantity, or items shipped at a higher price than stated on the PO. Neither this PO nor any interest herein shall be assigned, transferred, or encumbered by Provider except as authorized in writing by the County.

Notices. All notices given by one party to the other party under this PO shall be delivered to the receiving party's address set forth on this PO either by hand, qualified courier, or e-mail and shall be deemed received the day after it is transmitted. For the County, it shall be addressed to Flagler County Board of County Commissioners, Attention: Office of Procurement and Contracts, 1769 E. Moody Boulevard, Building 2, Bunnell, Florida, 32110, or if by email: purchasing@flaglercounty.gov.

No Waiver. Except as expressly set forth herein, no failure or delay on the part of the County in exercising any right, power, or remedy hereunder shall operate as or be deemed a waiver thereof, nor shall any single or partial exercise of any right, power, or

remedy preclude any other or further exercise thereof, or the exercise of any other right, power, or remedy.

Order of Precedence. In the event of conflict between this PO or a County Contract, the originating County contract and amendments thereto shall be controlling. This control shall pertain to all specifications and scopes of work included in the originating County contract and any amendments thereto.

Payment. Except for construction services, which shall be paid pursuant to the Florida Prompt Payment Act, the County shall pay Provider within 45 (forty-five) days after receiving an accurate and undisputed invoice, unless the County accepts a prompt payment discount from Provider and the goods or services are not defective. Invoice, packing slip, delivery receipt, order acknowledgement, and correspondence shall clearly indicate the PO number. Pursuant to Chapter 218, F.S., the County will pay interest not to exceed one percent (1%) per month on all undisputed invoices not paid within forty-five (45) days after receipt of the entire order of the commodity or service AND a properly completed invoice, whichever is later. Any additional or different terms and conditions on Provider's documents shall be considered null and void. The County may deduct the amounts it is due from the Provider's payment or not pay disputed invoices until such a dispute is resolved. Nothing in this PO shall create any obligation on the part of the County to pay directly to any subcontractor or supplier of Provider any monies due to such subcontractor or supplier or claims of such subcontractor or supplier for amounts owed by Provider to subcontractor or supplier for goods or services provided under this PO.

Sovereign Immunity. The County expressly retains all rights, benefits, and immunities of sovereign immunity in accordance with §768.28, Florida Statutes. Notwithstanding anything set forth in any section of the Contract and/or this PO to the contrary, nothing in the Contract and/or this PO shall be deemed as a waiver of immunity of limits of liability of the County beyond any statutory limited waiver of immunity or limits of liability which may have been adopted by the Florida Legislature or may be adopted by the Florida Legislature and the cap on the amount and liability of the County for damages regardless of the number or nature of claims in tort, equity, or contract shall not exceed the dollar amount set by the legislature for tort.

Taxes. The County is tax exempt from Florida sales tax (Exemption # 85-8013245979C-5). Certificates are available on request.

UCC. In addition to any rights or remedies contained in this PO, each party shall have rights, duties, and remedies available through the Uniform Commercial Code (UCC).

Provider's Terms and Conditions. If Provider's terms and conditions conflict with the County's Terms and Conditions, the County's Terms and Conditions shall prevail.

Warranty. Provider warrants that all work or services performed under this PO shall be performed in a good and competent workmanlike manner to the satisfaction of the County, and materials shall be of good quality (unless otherwise stated on PO), and free from defects and pursuant to specifications and requirements of the contract and/or to this PO. The Provider warrants merchantability of all goods or services and that they are fit for the ordinary purposes they are intended to serve.

AIR TRAFFIC CONTROL TOWER REHABILITATION



FLAGLER EXECUTIVE AIRPORT
FLAGLER COUNTY, FLORIDA

PROJECT MANUAL & TECHNICAL SPECIFICATIONS

ISSUED FOR BID
26-ITB-018

Prepared by:

AVCON, INC.
5555 E. Michigan Street, Suite 200
Orlando, FL 32822
407.599.1122
www.avconinc.com

2026.0355.03

JULY 2026

PROJECT MANUAL & TECHNICAL SPECIFICATIONS

TABLE OF CONTENTS

GENERAL PROVISIONS
Definition of Terms GP-10
Proposal Requirements and Conditions GP-20
Award and Execution of Contract GP-30
Scope of Work GP-40
Control of Work GP-50
Control of Materials GP-60
Legal Regulations and Responsibility to Public GP-70
Execution and Progress GP-80
Attachment A to Section 80 – Construction Safety and Phasing Plan ..... CSPP
Measurement and Payment GP-90

SPECIAL PROVISIONS
Federal Contract Provisions .....
Davis Bacon Wage Rate Determination .....

TECHNICAL SPECIFICATIONS
Temporary Air and Water Pollution, Soil Erosion, and Siltation Control C-102
Mobilization C-105
FDOT Standard Specifications for Road and Bridge Construction P-100
Asphalt Pavement Rejuvenation P-632
Chain-Link Fence F-162
Sodding T-904

REFERENCE SPECIFICATIONS: The following FAA Advisory Circulars are not included in the Project Manual but form a part of the executed contract by reference. FAA Advisory Circulars may be downloaded from www.faa.gov.

150/5200-18C	Airport Safety Self-Inspection
150/5370-2G	Operational Safety on Airports During Construction

SECTION 10 DEFINITION OF TERMS

When the following terms are used in these specifications, in the contract, or in any documents or other instruments pertaining to construction where these specifications govern, the intent and meaning shall be defined as follows:

Paragraph Number	Term	Definition
10-01	**AASHTO**	The American Association of State Highway and Transportation Officials.
10-02	**Access Road**	The right-of-way, the roadway and all improvements constructed thereon connecting the airport to a public roadway.
10-03	**Advertisement**	A public announcement, as required by local law, inviting bids for work to be performed and materials to be furnished.
10-04	**Airport**	Airport means an area of land or water which is used or intended to be used for the landing and takeoff of aircraft; an appurtenant area used or intended to be used for airport buildings or other airport facilities or rights of way; airport buildings and facilities located in any of these areas, and a heliport.
10-05	**Airport Improvement Program (AIP)**	A grant-in-aid program, administered by the Federal Aviation Administration (FAA).
10-06	**Air Operations Area (AOA)**	The term air operations area (AOA) shall mean any area of the airport used or intended to be used for the landing, takeoff, or surface maneuvering of aircraft. An air operation area shall include such paved or unpaved areas that are used or intended to be used for the unobstructed movement of aircraft in addition to its associated runway, taxiway, or apron.
10-07	**Apron**	Area where aircraft are parked, unloaded or loaded, fueled and/or serviced.
10-08	**ASTM International (ASTM)**	Formerly known as the American Society for Testing and Materials (ASTM).
10-09	**Award**	The Owner's notice to the successful bidder of the acceptance of the submitted bid.
10-10	**Bidder**	Any individual, partnership, firm, or corporation, acting directly or through a duly authorized representative, who submits a proposal for the work contemplated.
10-11	**Building Area**	An area on the airport to be used, considered, or intended to be used for airport buildings or other airport facilities or rights-of-way together with all airport buildings and facilities located thereon.
10-12	**Calendar Day**	Every day shown on the calendar.

Paragraph Number	Term	Definition
10-13	**Certificate of Analysis (COA)**	The COA is the manufacturer's Certificate of Compliance (COC) including all applicable test results required by the specifications.
10-14	**Certificate of Compliance (COC)**	The manufacturer's certification stating that materials or assemblies furnished fully comply with the requirements of the contract. The certificate shall be signed by the manufacturer's authorized representative.
10-15	**Change Order**	A written order to the Contractor covering changes in the plans, specifications, or proposal quantities and establishing the basis of payment and contract time adjustment, if any, for work within the scope of the contract and necessary to complete the project.
10-16	**Contract**	A written agreement between the Owner and the Contractor that establishes the obligations of the parties including but not limited to performance of work, furnishing of labor, equipment and materials and the basis of payment. The awarded contract includes but may not be limited to: Advertisement, Contract form, Proposal, Performance bond, payment bond, General provisions, certifications and representations, Technical Specifications, Plans, Supplemental Provisions, standards incorporated by reference and issued addenda.
10-17	**Contract Item (Pay Item)**	A specific unit of work for which a price is provided in the contract.
10-18	**Contract Time**	The number of calendar days or working days, stated in the proposal, allowed for completion of the contract, including authorized time extensions. If a calendar date of completion is stated in the proposal, in lieu of a number of calendar or working days, the contract shall be completed by that date.
10-19	**Contractor**	The individual, partnership, firm, or corporation primarily liable for the acceptable performance of the work contracted and for the payment of all legal debts pertaining to the work who acts directly or through lawful agents or employees to complete the contract work.
10-20	**Contractors Quality Control (QC) Facilities**	The Contractor's QC facilities in accordance with the Contractor Quality Control Program (CQCP).
10-21	**Contractor Quality Control Program (CQCP)**	Details the methods and procedures that will be taken to assure that all materials and completed construction required by the contract conform to contract plans, technical specifications and other requirements, whether manufactured by the

Paragraph Number	Term	Definition
		Contractor, or procured from subcontractors or vendors.
10-22	**Control Strip**	A demonstration by the Contractor that the materials, equipment, and construction processes results in a product meeting the requirements of the specification.
10-23	**Construction Safety and Phasing Plan (CSPP)**	The overall plan for safety and phasing of a construction project developed by the airport operator, or developed by the airport operator's consultant and approved by the airport operator. It is included in the invitation for bids and becomes part of the project specifications.
10-24	**Drainage System**	The system of pipes, ditches, and structures by which surface or subsurface waters are collected and conducted from the airport area.
10-25	**Engineer**	The individual, partnership, firm, or corporation duly authorized by the Owner to be responsible for engineering, inspection, and/or observation of the contract work and acting directly or through an authorized representative.
10-26	**Equipment**	All machinery, together with the necessary supplies for upkeep and maintenance; and all tools and apparatus necessary for the proper construction and acceptable completion of the work.
10-27	**Extra Work**	An item of work not provided for in the awarded contract as previously modified by change order or supplemental agreement, but which is found by the Owner's Engineer or Resident Project Representative (RPR) to be necessary to complete the work within the intended scope of the contract as previously modified.
10-28	**FAA**	The Federal Aviation Administration. When used to designate a person, FAA shall mean the Administrator or their duly authorized representative.
10-29	**Federal Specifications**	The federal specifications and standards, commercial item descriptions, and supplements, amendments, and indices prepared and issued by the General Services Administration.
10-30	**Force Account**	**a.** Contract Force Account - A method of payment that addresses extra work performed by the Contractor on a time and material basis. **b.** Owner Force Account - Work performed for the project by the Owner's employees.
10-31	**Intention of Terms**	Whenever, in these specifications or on the plans, the words "directed," "required," "permitted," "ordered," "designated," "prescribed," or words of like import are

Paragraph Number	Term	Definition
		used, it shall be understood that the direction, requirement, permission, order, designation, or prescription of the Engineer and/or Resident Project Representative (RPR) is intended; and similarly, the words “approved,” “acceptable,” “satisfactory,” or words of like import, shall mean approved by, or acceptable to, or satisfactory to the Engineer and/or RPR, subject in each case to the final determination of the Owner. Any reference to a specific requirement of a numbered paragraph of the contract specifications or a cited standard shall be interpreted to include all general requirements of the entire section, specification item, or cited standard that may be pertinent to such specific reference.
10-32	**Lighting**	A system of fixtures providing or controlling the light sources used on or near the airport or within the airport buildings. The field lighting includes all luminous signals, markers, floodlights, and illuminating devices used on or near the airport or to aid in the operation of aircraft landing at, taking off from, or taxiing on the airport surface.
10-33	**Major and Minor Contract Items**	A major contract item shall be any item that is listed in the proposal, the total cost of which is equal to or greater than 20% of the total amount of the award contract. All other items shall be considered minor contract items.
10-34	**Materials**	Any substance specified for use in the construction of the contract work.
10-35	**Modification of Standards (MOS)**	Any deviation from standard specifications applicable to material and construction methods in accordance with FAA Order 5300.1.
10-36	**Notice to Proceed (NTP)**	A written notice to the Contractor to begin the actual contract work on a previously agreed to date. If applicable, the Notice to Proceed shall state the date on which the contract time begins.
10-37	**Owner**	The term “Owner” shall mean the party of the first part or the contracting agency signatory to the contract. Where the term “Owner” is capitalized in this document, it shall mean airport Sponsor only. The Owner for this project is Flagler County Board of County Commissioners (BoCC).
10-38	**Passenger Facility Charge (PFC)**	Per 14 Code of Federal Regulations (CFR) Part 158 and 49 United States Code (USC) § 40117, a PFC is

Paragraph Number	Term	Definition
		a charge imposed by a public agency on passengers enplaned at a commercial service airport it controls.
10-39	**Pavement Structure**	The combined surface course, base course(s), and subbase course(s), if any, considered as a single unit.
10-40	**Payment bond**	The approved form of security furnished by the Contractor and their own surety as a guaranty that the Contractor will pay in full all bills and accounts for materials and labor used in the construction of the work.
10-41	**Performance bond**	The approved form of security furnished by the Contractor and their own surety as a guaranty that the Contractor will complete the work in accordance with the terms of the contract.
10-42	**Plans**	The official drawings or exact reproductions which show the location, character, dimensions and details of the airport and the work to be done and which are to be considered as a part of the contract, supplementary to the specifications. Plans may also be referred to as 'contract drawings.'
10-43	**Project**	The agreed scope of work for accomplishing specific airport development with respect to a particular airport.
10-44	**Proposal**	The written offer of the bidder (when submitted on the approved proposal form) to perform the contemplated work and furnish the necessary materials in accordance with the provisions of the plans and specifications.
10-45	**Proposal guaranty**	The security furnished with a proposal to guarantee that the bidder will enter into a contract if their own proposal is accepted by the Owner.
10-46	**Quality Assurance (QA)**	Owner's responsibility to assure that construction work completed complies with specifications for payment.
10-47	**Quality Control (QC)**	Contractor's responsibility to control material(s) and construction processes to complete construction in accordance with project specifications.
10-48	**Quality Assurance (QA) Inspector**	An authorized representative of the Engineer and/or Resident Project Representative (RPR) assigned to make all necessary inspections, observations, tests, and/or observation of tests of the work performed or being performed, or of the materials furnished or being furnished by the Contractor.
10-49	**Quality Assurance (QA) Laboratory**	The official quality assurance testing laboratories of the Owner or such other laboratories as may be designated by the Engineer or RPR. May also be referred to as Engineer's, Owner's, or QA Laboratory.

Paragraph Number	Term	Definition
10-50	**Resident Project Representative (RPR)**	The individual, partnership, firm, or corporation duly authorized by the Owner to be responsible for all necessary inspections, observations, tests, and/or observations of tests of the contract work performed or being performed, or of the materials furnished or being furnished by the Contractor, and acting directly or through an authorized representative.
10-51	**Runway**	The area on the airport prepared for the landing and takeoff of aircraft.
10-52	**Runway Safety Area (RSA)**	A defined surface surrounding the runway prepared or suitable for reducing the risk of damage to aircraft. See the construction safety and phasing plan (CSPP) for limits of the RSA.
10-53	**Safety Plan Compliance Document (SPCD)**	Details how the Contractor will comply with the CSPP.
10-54	**Specifications**	A part of the contract containing the written directions and requirements for completing the contract work. Standards for specifying materials or testing which are cited in the contract specifications by reference shall have the same force and effect as if included in the contract physically.
10-55	**Sponsor**	A Sponsor is defined in 49 USC § 47102(24) as a public agency that submits to the FAA for an AIP grant; or a private Owner of a public-use airport that submits to the FAA an application for an AIP grant for the airport.
10-56	**Structures**	Airport facilities such as bridges; culverts; catch basins, inlets, retaining walls, cribbing; storm and sanitary sewer lines; water lines; underdrains; electrical ducts, manholes, handholes, lighting fixtures and bases; transformers; navigational aids; buildings; vaults; and, other manmade features of the airport that may be encountered in the work and not otherwise classified herein.
10-57	**Subgrade**	The soil that forms the pavement foundation.
10-58	**Superintendent**	The Contractor's executive representative who is present on the work during progress, authorized to receive and fulfill instructions from the RPR, and who shall supervise and direct the construction.
10-59	**Supplemental Agreement**	A written agreement between the Contractor and the Owner that establishes the basis of payment and contract time adjustment, if any, for the work affected by the supplemental agreement. A supplemental agreement is required if: (1) in scope work would increase or decrease the total amount of the awarded contract by more than 25%: (2) in scope work would

Paragraph Number	Term	Definition
		increase or decrease the total of any major contract item by more than 25%; (3) work that is not within the scope of the originally awarded contract; or (4) adding or deleting of a major contract item.
10-60	**Surety**	The corporation, partnership, or individual, other than the Contractor, executing payment or performance bonds that are furnished to the Owner by the Contractor.
10-61	**Taxilane**	A taxiway designed for low speed movement of aircraft between aircraft parking areas and terminal areas.
10-62	**Taxiway**	The portion of the air operations area of an airport that has been designated by competent airport authority for movement of aircraft to and from the airport's runways, aircraft parking areas, and terminal areas.
10-63	**Taxiway/Taxilane Safety Area (TSA)**	A defined surface alongside the taxiway prepared or suitable for reducing the risk of damage to an aircraft. See the construction safety and phasing plan (CSPP) for limits of the TSA.
10-64	**Work**	The furnishing of all labor, materials, tools, equipment, and incidentals necessary or convenient to the Contractor's performance of all duties and obligations imposed by the contract, plans, and specifications.
10-65	**Working day**	A working day shall be any day other than a legal holiday, Saturday, or Sunday on which the normal working forces of the Contractor may proceed with regular work for at least six (6) hours toward completion of the contract. When work is suspended for causes beyond the Contractor's control, it will not be counted as a working day. Saturdays, Sundays and holidays on which the Contractor's forces engage in regular work will be considered as working days.
10-66	**Owner Defined terms**	None

END OF SECTION 10

SECTION 20 PROPOSAL REQUIREMENTS AND CONDITIONS

20-01 ADVERTISEMENT (NOTICE TO BIDDERS). See the County's eProcurement Portal, OpenGov.

20-02 QUALIFICATION OF BIDDERS. Each bidder shall submit evidence of competency and evidence of financial responsibility to perform the work to the Owner at the time of bid opening.

Evidence of competency, unless otherwise specified, shall consist of statements covering the bidder's past experience on similar work, and a list of equipment and a list of key personnel that would be available for the work.

Each bidder shall furnish the Owner satisfactory evidence of their financial responsibility. Evidence of financial responsibility, unless otherwise specified, shall consist of a confidential statement or report of the bidder's financial resources and liabilities as of the last calendar year or the bidder's last fiscal year. Such statements or reports shall be certified by a public accountant. At the time of submitting such financial statements or reports, the bidder shall further certify whether their financial responsibility is approximately the same as stated or reported by the public accountant. If the bidder's financial responsibility has changed, the bidder shall qualify the public accountant's statement or report to reflect the bidder's true financial condition at the time such qualified statement or report is submitted to the Owner.

Unless otherwise specified, a bidder may submit evidence that they are prequalified with the State Highway Division and are on the current "bidder's list" of the state in which the proposed work is located. Evidence of State Highway Division prequalification may be submitted as evidence of financial responsibility in lieu of the certified statements or reports specified above.

20-03 CONTENTS OF PROPOSAL FORMS. The Owner's proposal forms state the location and description of the proposed construction; the place, date, and time of opening of the proposals; and the estimated quantities of the various items of work to be performed and materials to be furnished for which unit bid prices are asked. The proposal form states the time in which the work must be completed, and the amount of the proposal guaranty that must accompany the proposal. The Owner will accept only those Proposals properly executed on physical forms or electronic forms provided by the Owner. Bidder actions that may cause the Owner to deem a proposal irregular are given in paragraph 20-09 *Irregular proposals*.

Mobilization is limited to 10 percent of the total project cost.

A pre-bid conference is required on this project to discuss as a minimum, the following items: material requirements; submittals; Quality Control/Quality Assurance requirements; the construction safety and phasing plan including airport access and staging areas; and unique airfield paving construction requirements. The time, date, and location of the pre-bid meeting can be found in the County's eProcurement Portal, OpenGov.

20-04 ISSUANCE OF PROPOSAL FORMS. The Owner reserves the right to refuse to issue a proposal form to a prospective bidder if the bidder is in default for any of the following reasons:

a. Failure to comply with any prequalification regulations of the Owner, if such regulations are cited, or otherwise included, in the proposal as a requirement for bidding.

b. Failure to pay, or satisfactorily settle, all bills due for labor and materials on former contracts in force with the Owner at the time the Owner issues the proposal to a prospective bidder.

c. Documented record of Contractor default under previous contracts with the Owner.

d. Documented record of unsatisfactory work on previous contracts with the Owner.

20-05 INTERPRETATION OF ESTIMATED PROPOSAL QUANTITIES. An estimate of quantities of work to be done and materials to be furnished under these specifications is given in the proposal. It is the result of careful calculations and is believed to be correct. It is given only as a basis for comparison of proposals and the award of the contract. The Owner does not expressly, or by implication, agree that the actual quantities involved will correspond exactly therewith; nor shall the bidder plead misunderstanding or deception because of such estimates of quantities, or of the character, location, or other conditions pertaining to the work. Payment to the Contractor will be made only for the actual quantities of work performed or materials furnished in accordance with the plans and specifications. It is understood that the quantities may be increased or decreased as provided in the Section 40, paragraph 40-02, Alteration of Work and Quantities, without in any way invalidating the unit bid prices.

20-06 EXAMINATION OF PLANS, SPECIFICATIONS, AND SITE. The bidder is expected to carefully examine the site of the proposed work, the proposal, plans, specifications, and contract forms. Bidders shall satisfy themselves to the character, quality, and quantities of work to be performed, materials to be furnished, and to the requirements of the proposed contract. The submission of a proposal shall be prima facie evidence that the bidder has made such examination and is satisfied to the conditions to be encountered in performing the work and the requirements of the proposed contract, plans, and specifications.

20-07 PREPARATION OF PROPOSAL. The bidder shall submit their proposal on the forms furnished by the Owner. All blank spaces in the proposal forms, unless explicitly stated otherwise, must be correctly filled in where indicated for each and every item for which a quantity is given. The bidder shall state the price (written in ink or typed) both in words and numerals which they propose for each pay item furnished in the proposal. In case of conflict between words and numerals, the words, unless obviously incorrect, shall govern.

If the proposal is made by an individual, their name and post office address must be shown. If made by a partnership, the name and post office address of each member of the partnership must be shown. If made by a corporation, the person signing the proposal shall give the name of the state where the corporation was chartered and the name, titles, and business address of the president, secretary, and the treasurer. Anyone signing a proposal as an agent shall file evidence of their authority to do so and that the signature is binding upon the firm or corporation.

20-08 RESPONSIVE AND RESPONSIBLE BIDDER. A responsive bid conforms to all significant terms and conditions contained in the Owner's invitation for bid. It is the Owner's responsibility to decide if the exceptions taken by a bidder to the solicitation are material or not and the extent of deviation it is willing to accept.

A responsible bidder has the ability to perform successfully under the terms and conditions of a proposed procurement, as defined in 2 CFR § 200.318(h). This includes such matters as Contractor integrity, compliance with public policy, record of past performance, and financial and technical resources.

20-09 IRREGULAR PROPOSALS. Proposals shall be considered irregular for the following reasons:

a. If the proposal is on a form other than that furnished by the Owner, or if the Owner's form is altered, or if any part of the proposal form is detached.

b. If there are unauthorized additions, conditional or alternate pay items, or irregularities of any kind that make the proposal incomplete, indefinite, or otherwise ambiguous.

c. If the proposal does not contain a unit price for each pay item listed in the proposal, except in the case of authorized alternate pay items, for which the bidder is not required to furnish a unit price.

d. If the proposal contains unit prices that are obviously unbalanced.

e. If the proposal is not accompanied by the proposal guaranty specified by the Owner.

f. If the applicable Disadvantaged Business Enterprise information is incomplete.

The Owner reserves the right to reject any irregular proposal and the right to waive technicalities if such waiver is in the best interest of the Owner and conforms to local laws and ordinances pertaining to the letting of construction contracts.

20-10 BID GUARANTEE. Each separate proposal shall be accompanied by a bid bond, certified check, or other specified acceptable collateral, in the amount specified in the proposal form. Such bond, check, or collateral, shall be made payable to the Owner.

20-11 DELIVERY OF PROPOSAL. Each proposal shall be completed and submitted on the County's eProcurement Portal, OpenGov. Proposals received after the bid opening time shall be returned to the bidder unopened.

20-12 WITHDRAWAL OR REVISION OF PROPOSALS. A bidder may withdraw or revise (by withdrawal of one proposal and submission of another) a proposal provided that the bidder's request for withdrawal is received by the Owner by email before the time specified for opening bids. Revised proposals must be received at the place specified in the advertisement before the time specified for opening all bids.

20-13 PUBLIC OPENING OF PROPOSALS. Proposals shall be opened, and read, publicly at the time and place specified in the advertisement. Bidders, their authorized agents, and other interested persons are invited to attend. Proposals that have been withdrawn (by written or telegraphic request) or received after the time specified for opening bids shall be returned to the bidder unopened.

20-14 DISQUALIFICATION OF BIDDERS. A bidder shall be considered disqualified for any of the following reasons:

a. Submitting more than one proposal from the same partnership, firm, or corporation under the same or different name.

b. Evidence of collusion among bidders. Bidders participating in such collusion shall be disqualified as bidders for any future work of the Owner until any such participating bidder has been reinstated by the Owner as a qualified bidder.

c. If the bidder is considered to be in "default" for any reason specified in paragraph 20-04, *Issuance of Proposal Forms,* of this section.

20-15 Discrepancies and Omissions. A Bidder who discovers discrepancies or omissions with the project bid documents shall immediately notify the Owner's Engineer of the matter. A bidder that has doubt as to the true meaning of a project requirement may submit to the Owner's Engineer a written request for interpretation prior to the question deadline listed on the County's eProcurement Portal, OpenGov.

Any interpretation of the project bid documents by the Owner's Engineer will be by written addendum issued by the Owner. The Owner will not consider any instructions, clarifications or interpretations of the bidding documents in any manner other than written addendum.

END OF SECTION 20

SECTION 30 AWARD AND EXECUTION OF CONTRACT

30-01 CONSIDERATION OF PROPOSALS. After the proposals are publicly opened and read, they will be compared on the basis of the summation of the products obtained by multiplying the estimated quantities shown in the proposal by the unit bid prices. If a bidder's proposal contains a discrepancy between unit bid prices written in words and unit bid prices written in numbers, the unit bid price written in words shall govern.

Until the award of a contract is made, the Owner reserves the right to reject a bidder's proposal for any of the following reasons:

a. If the proposal is irregular as specified in Section 20, paragraph 20-09, *Irregular Proposals*.

b. If the bidder is disqualified for any of the reasons specified Section 20, paragraph 20-14, *Disqualification of Bidders*.

In addition, until the award of a contract is made, the Owner reserves the right to reject any or all proposals, waive technicalities, if such waiver is in the best interest of the Owner and is in conformance with applicable state and local laws or regulations pertaining to the letting of construction contracts; advertise for new proposals; or proceed with the work otherwise. All such actions shall promote the Owner's best interests.

30-02 AWARD OF CONTRACT. The award of a contract, if it is to be awarded, shall be made within 120 calendar days of the date specified for publicly opening proposals, unless otherwise specified herein.

If the Owner elects to proceed with an award of contract, the Owner will make award to the responsible bidder whose bid, conforming with all the material terms and conditions of the bid documents, is the lowest in price.

30-03 CANCELLATION OF AWARD. The Owner reserves the right to cancel the award without liability to the bidder, except return of proposal guaranty, at any time before a contract has been fully executed by all parties and is approved by the Owner in accordance with paragraph 30-07 *Approval of Contract*.

30-04 RETURN OF PROPOSAL GUARANTY. All proposal guaranties, except those of the two lowest bidders, will be returned immediately after the Owner has made a comparison of bids as specified in the paragraph 30-01, *Consideration of Proposals.* Proposal guaranties of the two lowest bidders will be retained by the Owner until such time as an award is made, at which time, the unsuccessful bidder's proposal guaranty will be returned. The successful bidder's proposal guaranty will be returned as soon as the Owner receives the contract bonds as specified in paragraph 30-05, *Requirements of Contract Bonds.*

30-05 REQUIREMENTS OF CONTRACT BONDS. At the time of the execution of the contract, the successful bidder shall furnish the Owner a surety bond or bonds that have been fully executed by the bidder and the surety guaranteeing the performance of the work and the payment of all legal debts that may be incurred by reason of the Contractor's performance of the work. The surety and the form of the bond or bonds shall be acceptable to the Owner. Unless otherwise

specified in this subsection, the surety bond or bonds shall be in a sum equal to the full amount of the contract.

30-06 EXECUTION OF CONTRACT. The successful bidder shall sign (execute) the necessary agreements for entering into the contract and return the signed contract to the Owner, along with the fully executed surety bond or bonds specified in paragraph 30-05, *Requirements of Contract Bonds,* of this section, within 15 calendar days from the date mailed or otherwise delivered to the successful bidder.

30-07 APPROVAL OF CONTRACT. Upon receipt of the contract and contract bond or bonds that have been executed by the successful bidder, the Owner shall complete the execution of the contract in accordance with local laws or ordinances, and return the fully executed contract to the Contractor. Delivery of the fully executed contract to the Contractor shall constitute the Owner's approval to be bound by the successful bidder's proposal and the terms of the contract.

30-08 FAILURE TO EXECUTE CONTRACT. Failure of the successful bidder to execute the contract and furnish an acceptable surety bond or bonds within the period specified in paragraph 30-06, *Execution of Contract,* of this section shall be just cause for cancellation of the award and forfeiture of the proposal guaranty, not as a penalty, but as liquidated damages to the Owner.

END OF SECTION 30

SECTION 40 SCOPE OF WORK

40-01 INTENT OF CONTRACT. The intent of the contract is to provide for construction and completion, in every detail, of the work described. It is further intended that the Contractor shall furnish all labor, materials, equipment, tools, transportation, and supplies required to complete the work in accordance with the plans, specifications, and terms of the contract.

40-02 ALTERATION OF WORK AND QUANTITIES. The Owner reserves the right to make such changes in quantities and work as may be necessary or desirable to complete, in a satisfactory manner, the original intended work. Unless otherwise specified in the Contract, the Owner's Engineer or RPR shall be and is hereby authorized to make, in writing, such in-scope alterations in the work and variation of quantities as may be necessary to complete the work, provided such action does not represent a significant change in the character of the work.

For purpose of this section, a significant change in character of work means: any change that is outside the current contract scope of work; any change (increase or decrease) in the total contract cost by more than 25%; or any change in the total cost of a major contract item by more than 25%.

Work alterations and quantity variances that do not meet the definition of significant change in character of work shall not invalidate the contract nor release the surety. Contractor agrees to accept payment for such work alterations and quantity variances in accordance with Section 90, paragraph 90-03, *Compensation for Altered Quantities*.

Should the value of altered work or quantity variance meet the criteria for significant change in character of work, such altered work and quantity variance shall be covered by a supplemental agreement. Supplemental agreements shall also require consent of the Contractor's surety and separate performance and payment bonds. If the Owner and the Contractor are unable to agree on a unit adjustment for any contract item that requires a supplemental agreement, the Owner reserves the right to terminate the contract with respect to the item and make other arrangements for its completion.

40-03 OMITTED ITEMS. The Owner, the Owner's Engineer or the RPR may provide written notice to the Contractor to omit from the work any contract item that does not meet the definition of major contract item. Major contract items may be omitted by a supplemental agreement. Such omission of contract items shall not invalidate any other contract provision or requirement.

Should a contract item be omitted or otherwise ordered to be non-performed, the Contractor shall be paid for all work performed toward completion of such item prior to the date of the order to omit such item. Payment for work performed shall be in accordance with Section 90, paragraph 90-04, *Payment for Omitted Items*.

40-04 EXTRA WORK. Should acceptable completion of the contract require the Contractor to perform an item of work not provided for in the awarded contract as previously modified by change order or supplemental agreement, Owner may issue a Change Order to cover the necessary extra work. Change orders for extra work shall contain agreed unit prices for performing the change order work in accordance with the requirements specified in the order, and shall contain any adjustment to the contract time that, in the RPR's opinion, is necessary for completion of the extra work.

When determined by the RPR to be in the Owner's best interest, the RPR may order the Contractor to proceed with extra work as provided in Section 90, paragraph 90-05, *Payment for Extra Work*. Extra work that is necessary for acceptable completion of the project, but is not within the general scope of the work covered by the original contract shall be covered by a supplemental agreement as defined in Section 10, paragraph 10-59, *Supplemental Agreement*.

If extra work is essential to maintaining the project critical path, RPR may order the Contractor to commence the extra work under a Time and Material contract method. Once sufficient detail is available to establish the level of effort necessary for the extra work, the Owner shall initiate a change order or supplemental agreement to cover the extra work.

Any claim for payment of extra work that is not covered by written agreement (change order or supplemental agreement) shall be rejected by the Owner.

40-05 MAINTENANCE OF TRAFFIC. It is the explicit intention of the contract that the safety of aircraft, as well as the Contractor's equipment and personnel, is the most important consideration. The Contractor shall maintain traffic in the manner detailed in the Construction Safety and Phasing Plan (CSPP).

a. It is understood and agreed that the Contractor shall provide for the free and unobstructed movement of aircraft in the air operations areas (AOAs) of the airport with respect to their own operations and the operations of all subcontractors as specified in Section 80, paragraph 80-04, *Limitation of Operations*. It is further understood and agreed that the Contractor shall provide for the uninterrupted operation of visual and electronic signals (including power supplies thereto) used in the guidance of aircraft while operating to, from, and upon the airport as specified in Section 70, paragraph 70-15, *Contractor's Responsibility for Utility Service and Facilities of Others*.

b. With respect to their own operations and the operations of all subcontractors, the Contractor shall provide marking, lighting, and other acceptable means of identifying personnel, equipment, vehicles, storage areas, and any work area or condition that may be hazardous to the operation of aircraft, fire-rescue equipment, or maintenance vehicles at the airport in accordance with the construction safety and phasing plan (CSPP) and the safety plan compliance document (SPCD).

c. When the contract requires the maintenance of an existing road, street, or highway during the Contractor's performance of work that is otherwise provided for in the contract, plans, and specifications, the Contractor shall keep the road, street, or highway open to all traffic and shall provide maintenance as may be required to accommodate traffic. The Contractor, at their expense, shall be responsible for the repair to equal or better than preconstruction conditions of any damage caused by the Contractor's equipment and personnel. The Contractor shall furnish, erect, and maintain barricades, warning signs, flag person, and other traffic control devices in reasonable conformity with the Manual on Uniform Traffic Control Devices (MUTCD) (http://mutcd.fhwa.dot.gov/), unless otherwise specified. The Contractor shall also construct and maintain in a safe condition any temporary connections necessary for ingress to and egress from abutting property or intersecting roads, streets or highways.

40-06 REMOVAL OF EXISTING STRUCTURES. All existing structures encountered within the established lines, grades, or grading sections shall be removed by the Contractor, unless such existing structures are otherwise specified to be relocated, adjusted up or down, salvaged, abandoned in place, reused in the work or to remain in place. The cost of removing such existing

structures shall not be measured or paid for directly, but shall be included in the various contract items.

Should the Contractor encounter an existing structure (above or below ground) in the work for which the disposition is not indicated on the plans, the Resident Project Representative (RPR) shall be notified prior to disturbing such structure. The disposition of existing structures so encountered shall be immediately determined by the RPR in accordance with the provisions of the contract.

Except as provided in Section 40, paragraph 40-07, *Rights in and Use of Materials Found in the Work*, it is intended that all existing materials or structures that may be encountered (within the lines, grades, or grading sections established for completion of the work) shall be used in the work as otherwise provided for in the contract and shall remain the property of the Owner when so used in the work.

40-07 RIGHTS IN AND USE OF MATERIALS FOUND IN THE WORK. Should the Contractor encounter any material such as (but not restricted to) sand, stone, gravel, slag, or concrete slabs within the established lines, grades, or grading sections, the use of which is intended by the terms of the contract to be embankment, the Contractor may at their own option either:

a. Use such material in another contract item, providing such use is approved by the RPR and is in conformance with the contract specifications applicable to such use; or,

b. Remove such material from the site, upon written approval of the RPR; or

c. Use such material for the Contractor's own temporary construction on site; or,

d. Use such material as intended by the terms of the contract.

Should the Contractor wish to exercise option a., b., or c., the Contractor shall request the RPR's approval in advance of such use.

Should the RPR approve the Contractor's request to exercise option a., b., or c., the Contractor shall be paid for the excavation or removal of such material at the applicable contract price. The Contractor shall replace, at their expense, such removed or excavated material with an agreed equal volume of material that is acceptable for use in constructing embankment, backfills, or otherwise to the extent that such replacement material is needed to complete the contract work. The Contractor shall not be charged for use of such material used in the work or removed from the site.

Should the RPR approve the Contractor's exercise of option a., the Contractor shall be paid, at the applicable contract price, for furnishing and installing such material in accordance with requirements of the contract item in which the material is used.

It is understood and agreed that the Contractor shall make no claim for delays by reason of their own exercise of option a., b., or c.

The Contractor shall not excavate, remove, or otherwise disturb any material, structure, or part of a structure which is located outside the lines, grades, or grading sections established for the work, except where such excavation or removal is provided for in the contract, plans, or specifications.

40-08 FINAL CLEANUP. Upon completion of the work and before acceptance and final payment will be made, the Contractor shall remove from the site all machinery, equipment, surplus and discarded materials, rubbish, temporary structures, and stumps or portions of trees. The Contractor shall cut all brush and woods within the limits indicated and shall leave the site in a neat and presentable condition. Material cleared from the site and deposited on adjacent property will not be considered as having been disposed of satisfactorily, unless the Contractor has obtained the written permission of the property Owner.

END OF SECTION 40

SECTION 50 CONTROL OF WORK

50-01 AUTHORITY OF THE RESIDENT PROJECT REPRESENTATIVE (RPR). The RPR has final authority regarding the interpretation of project specification requirements. The RPR shall determine acceptability of the quality of materials furnished, method of performance of work performed, and the manner and rate of performance of the work. The RPR does not have the authority to accept work that does not conform to specification requirements.

50-02 CONFORMITY WITH PLANS AND SPECIFICATIONS. All work and all materials furnished shall be in reasonably close conformity with the lines, grades, grading sections, cross-sections, dimensions, material requirements, and testing requirements that are specified (including specified tolerances) in the contract, plans, or specifications.

If the RPR finds the materials furnished, work performed, or the finished product not within reasonably close conformity with the plans and specifications, but that the portion of the work affected will, in their opinion, result in a finished product having a level of safety, economy, durability, and workmanship acceptable to the Owner, the RPR will advise the Owner of their determination that the affected work be accepted and remain in place. The RPR will document the determination and recommend to the Owner a basis of acceptance that will provide for an adjustment in the contract price for the affected portion of the work. Changes in the contract price must be covered by contract change order or supplemental agreement as applicable.

If the RPR finds the materials furnished, work performed, or the finished product are not in reasonably close conformity with the plans and specifications and have resulted in an unacceptable finished product, the affected work or materials shall be removed and replaced or otherwise corrected by and at the expense of the Contractor in accordance with the RPR's written orders.

The term "reasonably close conformity" shall not be construed as waiving the Contractor's responsibility to complete the work in accordance with the contract, plans, and specifications. The term shall not be construed as waiving the RPR's responsibility to insist on strict compliance with the requirements of the contract, plans, and specifications during the Contractor's execution of the work, when, in the RPR's opinion, such compliance is essential to provide an acceptable finished portion of the work.

The term "reasonably close conformity" is also intended to provide the RPR with the authority, after consultation with the Sponsor and FAA, to use sound engineering judgment in their determinations to accept work that is not in strict conformity, but will provide a finished product equal to or better than that required by the requirements of the contract, plans and specifications.

The RPR will not be responsible for the Contractor's means, methods, techniques, sequences, or procedures of construction or the safety precautions incident thereto.

50-03 COORDINATION OF CONTRACT, PLANS, AND SPECIFICATIONS. The contract, plans, specifications, and all referenced standards cited are essential parts of the contract requirements. If electronic files are provided and used on the project and there is a conflict between the electronic files and hard copy plans, the hard copy plans shall govern. A requirement occurring in one is as binding as though occurring in all. They are intended to be complementary and to describe and provide for a complete work. In case of discrepancy, calculated dimensions will

govern over scaled dimensions; contract technical specifications shall govern over contract general provisions, plans, cited standards for materials or testing, and cited advisory circulars (ACs); contract general provisions shall govern over plans, cited standards for materials or testing, and cited ACs; plans shall govern over cited standards for materials or testing and cited ACs. If any paragraphs contained in the Special Provisions conflict with General Provisions or Technical Specifications, the Special Provisions shall govern.

From time to time, discrepancies within cited testing standards occur due to the timing of the change, edits, and/or replacement of the standards. If the Contractor discovers any apparent discrepancy within standard test methods, the Contractor shall immediately ask the RPR for an interpretation and decision, and such decision shall be final.

The Contractor shall not take advantage of any apparent error or omission on the plans or specifications. In the event the Contractor discovers any apparent error or discrepancy, Contractor shall immediately notify the Owner or the designated representative in writing requesting their written interpretation and decision.

50-04 LIST OF SPECIAL PROVISIONS.

- Federal Contract Provisions
- Davis Bacon Wage Rate Determination

50-05 COOPERATION OF CONTRACTOR. The Contractor shall be supplied with an electronic PDF of the plans and specifications. The Contractor shall have available on the construction site at all times one hardcopy each of the plans and specifications. Additional hard copies of plans and specifications may be obtained by the Contractor for the cost of reproduction.

The Contractor shall give constant attention to the work to facilitate the progress thereof, and shall cooperate with the RPR and their inspectors and with other Contractors in every way possible. The Contractor shall have a competent superintendent on the work at all times who is fully authorized as their agent on the work. The superintendent shall be capable of reading and thoroughly understanding the plans and specifications and shall receive and fulfill instructions from the RPR or their authorized representative.

50-06 COOPERATION BETWEEN CONTRACTORS. The Owner reserves the right to contract for and perform other or additional work on or near the work covered by this contract.

When separate contracts are let within the limits of any one project, each Contractor shall conduct the work not to interfere with or hinder the progress of completion of the work being performed by other Contractors. Contractors working on the same project shall cooperate with each other as directed.

Each Contractor involved shall assume all liability, financial or otherwise, in connection with their own contract and shall protect and hold harmless the Owner from any and all damages or claims that may arise because of inconvenience, delays, or loss experienced because of the presence and operations of other Contractors working within the limits of the same project.

The Contractor shall arrange their work and shall place and dispose of the materials being used to not interfere with the operations of the other Contractors within the limits of the same project.

The Contractor shall join their work with that of the others in an acceptable manner and shall perform it in proper sequence to that of the others.

50-07 CONSTRUCTION LAYOUT AND STAKES. The Engineer/RPR shall establish necessary horizontal and vertical control. The establishment of Survey Control and/or reestablishment of survey control shall be by a State Licensed Land Surveyor. Contractor is responsible for preserving integrity of horizontal and vertical controls established by Engineer/RPR. In case of negligence on the part of the Contractor or their employees, resulting in the destruction of any horizontal and vertical control, the resulting costs will be deducted as a liquidated damage against the Contractor.

Prior to the start of construction, the Contractor will check all control points for horizontal and vertical accuracy and certify in writing to the RPR that the Contractor concurs with survey control established for the project. All lines, grades and measurements from control points necessary for the proper execution and control of the work on this project will be provided to the RPR. The Contractor is responsible to establish all layout required for the construction of the project.

Copies of survey notes will be provided to the RPR for each area of construction and for each placement of material as specified to allow the RPR to make periodic checks for conformance with plan grades, alignments and grade tolerances required by the applicable material specifications. Surveys will be provided to the RPR prior to commencing work items that cover or disturb the survey staking. Survey(s) and notes shall be provided in the following format(s): electronic (PDF) format.

Laser, GPS, String line, or other automatic control shall be checked with temporary control as necessary. In the case of error, on the part of the Contractor, their surveyor, employees or subcontractors, resulting in established grades, alignment or grade tolerances that do not concur with those specified or shown on the plans, the Contractor is solely responsible for correction, removal, replacement and all associated costs at no additional cost to the Owner.

No direct payment will be made, unless otherwise specified in contract documents, for this labor, materials, or other expenses. The cost shall be included in the price of the bid for the various items of the Contract.

50-08 AUTHORITY AND DUTIES OF QUALITY ASSURANCE (QA) INSPECTORS. QA inspectors shall be authorized to inspect all work done and all material furnished. Such QA inspection may extend to all or any part of the work and to the preparation, fabrication, or manufacture of the materials to be used. QA inspectors are not authorized to revoke, alter, or waive any provision of the contract. QA inspectors are not authorized to issue instructions contrary to the plans and specifications or to act as foreman for the Contractor.

QA Inspectors are authorized to notify the Contractor or their representatives of any failure of the work or materials to conform to the requirements of the contract, plans, or specifications and to reject such nonconforming materials in question until such issues can be referred to the RPR for a decision.

50-09 INSPECTION OF THE WORK. All materials and each part or detail of the work shall be subject to inspection. The RPR shall be allowed access to all parts of the work and shall be furnished with such information and assistance by the Contractor as is required to make a complete and detailed inspection.

If the RPR requests it, the Contractor, at any time before acceptance of the work, shall remove or uncover such portions of the finished work as may be directed. After examination, the Contractor shall restore said portions of the work to the standard required by the specifications. Should the work thus exposed or examined prove acceptable, the uncovering, or removing, and the replacing of the covering or making good of the parts removed will be paid for as extra work; but should the work so exposed or examined prove unacceptable, the uncovering, or removing, and the replacing of the covering or making good of the parts removed will be at the Contractor's expense.

Provide advance written notice to the RPR of work the Contractor plans to perform each week and each day. Any work done or materials used without written notice and allowing opportunity for inspection by the RPR may be ordered removed and replaced at the Contractor's expense.

Should the contract work include relocation, adjustment, or any other modification to existing facilities, not the property of the (contract) Owner, authorized representatives of the Owners of such facilities shall have the right to inspect such work. Such inspection shall in no sense make any facility owner a party to the contract, and shall in no way interfere with the rights of the parties to this contract.

50-10 REMOVAL OF UNACCEPTABLE AND UNAUTHORIZED WORK. All work that does not conform to the requirements of the contract, plans, and specifications will be considered unacceptable, unless otherwise determined acceptable by the RPR as provided in paragraph 50-02, *Conformity with Plans and Specifications*.

Unacceptable work, whether the result of poor workmanship, use of defective materials, damage through carelessness, or any other cause found to exist prior to the final acceptance of the work, shall be removed immediately and replaced in an acceptable manner in accordance with the provisions of Section 70, paragraph 70-14, *Contractor's Responsibility for Work*.

No removal work made under provision of this paragraph shall be done without lines and grades having been established by the RPR. Work done contrary to the instructions of the RPR, work done beyond the lines shown on the plans or as established by the RPR, except as herein specified, or any extra work done without authority, will be considered as unauthorized and will not be paid for under the provisions of the contract. Work so done may be ordered removed or replaced at the Contractor's expense.

Upon failure on the part of the Contractor to comply with any order of the RPR made under the provisions of this subsection, the RPR will have authority to cause unacceptable work to be remedied or removed and replaced; and unauthorized work to be removed and recover the resulting costs as a liquidated damage against the Contractor.

50-11 LOAD RESTRICTIONS. The Contractor shall comply with all legal load restrictions in the hauling of materials on public roads beyond the limits of the work. A special permit will not relieve the Contractor of liability for damage that may result from the moving of material or equipment.

The operation of equipment of such weight or so loaded as to cause damage to structures or to any other type of construction will not be permitted. Hauling of materials over the base course or surface course under construction shall be limited as directed. No loads will be permitted on a concrete pavement, base, or structure before the expiration of the curing period. The Contractor, at their own expense, shall be responsible for the repair to equal or better than preconstruction conditions of any damage caused by the Contractor's equipment and personnel.

50-12 MAINTENANCE DURING CONSTRUCTION. The Contractor shall maintain the work during construction and until the work is accepted. Maintenance shall constitute continuous and effective work prosecuted day by day, with adequate equipment and forces so that the work is maintained in satisfactory condition at all times.

In the case of a contract for the placing of a course upon a course or subgrade previously constructed, the Contractor shall maintain the previous course or subgrade during all construction operations.

All costs of maintenance work during construction and before the project is accepted shall be included in the unit prices bid on the various contract items, and the Contractor will not be paid an additional amount for such work.

50-13 FAILURE TO MAINTAIN THE WORK. Should the Contractor at any time fail to maintain the work as provided in paragraph 50-12, *Maintenance during Construction*, the RPR shall immediately notify the Contractor of such noncompliance. Such notification shall specify a reasonable time within which the Contractor shall be required to remedy such unsatisfactory maintenance condition. The time specified will give due consideration to the exigency that exists.

Should the Contractor fail to respond to the RPR's notification, the Owner may suspend any work necessary for the Owner to correct such unsatisfactory maintenance condition, depending on the exigency that exists. Any maintenance cost incurred by the Owner, shall be recovered as a liquidated damage against the Contractor.

50-14 PARTIAL ACCEPTANCE. If at any time during the execution of the project the Contractor substantially completes a usable unit or portion of the work, the occupancy of which will benefit the Owner, the Contractor may request the RPR to make final inspection of that unit. If the RPR finds upon inspection that the unit has been satisfactorily completed in compliance with the contract, the RPR may accept it as being complete, and the Contractor may be relieved of further responsibility for that unit. Such partial acceptance and beneficial occupancy by the Owner shall not void or alter any provision of the contract.

50-15 FINAL ACCEPTANCE. Upon due notice from the Contractor of presumptive completion of the entire project, the RPR and Owner will make an inspection. If all construction provided for and contemplated by the contract is found to be complete in accordance with the contract, plans, and specifications, such inspection shall constitute the final inspection. The RPR shall notify the Contractor in writing of final acceptance as of the date of the final inspection.

If, however, the inspection discloses any work, in whole or in part, as being unsatisfactory, the RPR will notify the Contractor and the Contractor shall correct the unsatisfactory work. Upon correction of the work, another inspection will be made which shall constitute the final inspection, provided the work has been satisfactorily completed. In such event, the RPR will make the final acceptance and notify the Contractor in writing of this acceptance as of the date of final inspection.

50-16 CLAIMS FOR ADJUSTMENT AND DISPUTES. If for any reason the Contractor deems that additional compensation is due for work or materials not clearly provided for in the contract, plans, or specifications or previously authorized as extra work, the Contractor shall notify the RPR in writing of their intention to claim such additional compensation before the Contractor begins the work on which the Contractor bases the claim. If such notification is not given or the RPR is not afforded proper opportunity by the Contractor for keeping strict account of actual cost as

required, then the Contractor hereby agrees to waive any claim for such additional compensation. Such notice by the Contractor and the fact that the RPR has kept account of the cost of the work shall not in any way be construed as proving or substantiating the validity of the claim. When the work on which the claim for additional compensation is based has been completed, the Contractor shall, within 10 calendar days, submit a written claim to the RPR who will present it to the Owner for consideration in accordance with local laws or ordinances.

Nothing in this subsection shall be construed as a waiver of the Contractor's right to dispute final payment based on differences in measurements or computations.

END OF SECTION 50

SECTION 60 CONTROL OF MATERIALS

60-01 SOURCE OF SUPPLY AND QUALITY REQUIREMENTS. The materials used in the work shall conform to the requirements of the contract, plans, and specifications. Unless otherwise specified, such materials that are manufactured or processed shall be new (as compared to used or reprocessed).

In order to expedite the inspection and testing of materials, the Contractor shall furnish documentation to the RPR as to the origin, composition, and manufacture of all materials to be used in the work. Documentation shall be furnished promptly after execution of the contract but, in all cases, prior to delivery of such materials.

At the RPR's option, materials may be approved at the source of supply before delivery. If it is found after trial that sources of supply for previously approved materials do not produce specified products, the Contractor shall furnish materials from other sources.

The Contractor shall furnish airport lighting equipment that meets the requirements of the specifications; and is listed in AC 150/5345-53, *Airport Lighting Equipment Certification Program* and *Addendum*, that is in effect on the date of advertisement.

60-02 SAMPLES, TESTS, AND CITED SPECIFICATIONS. All materials used in the work shall be inspected, tested, and approved by the RPR before incorporation in the work unless otherwise designated. Any work in which untested materials are used without approval or written permission of the RPR shall be performed at the Contractor's risk. Materials found to be unacceptable and unauthorized will not be paid for and, if directed by the RPR, shall be removed at the Contractor's expense.

Unless otherwise designated, quality assurance tests will be made by and at the expense of the Owner in accordance with the cited standard methods of ASTM, American Association of State Highway and Transportation Officials (AASHTO), federal specifications, Commercial Item Descriptions, and all other cited methods, which are current on the date of advertisement for bids.

The testing organizations performing on-site quality assurance field tests shall have copies of all referenced standards on the construction site for use by all technicians and other personnel. Unless otherwise designated, samples for quality assurance will be taken by a qualified representative of the RPR. All materials being used are subject to inspection, test, or rejection at any time prior to or during incorporation into the work. Copies of all tests will be furnished to the Contractor's representative at their request after review and approval of the RPR.

A copy of all Contractor QC test data shall be provided to the RPR daily, along with printed reports, in an approved format, on a weekly basis. After completion of the project, and prior to final payment, the Contractor shall submit a final report to the RPR showing all test data reports, plus an analysis of all results showing ranges, averages, and corrective action taken on all failing tests.

60-03 CERTIFICATION OF COMPLIANCE/ANALYSIS (COC/COA). The RPR may permit the use, prior to sampling and testing, of certain materials or assemblies when accompanied by manufacturer's COC stating that such materials or assemblies fully comply with the requirements of the contract. The certificate shall be signed by the manufacturer. Each lot of such materials or assemblies delivered to the work must be accompanied by a certificate of compliance in which

the lot is clearly identified. The COA is the manufacturer's COC and includes all applicable test results.

Materials or assemblies used on the basis of certificates of compliance may be sampled and tested at any time and if found not to be in conformity with contract requirements will be subject to rejection whether in place or not.

The form and distribution of certificates of compliance shall be as approved by the RPR.

When a material or assembly is specified by "brand name or equal" and the Contractor elects to furnish the specified "or equal," the Contractor shall be required to furnish the manufacturer's certificate of compliance for each lot of such material or assembly delivered to the work. Such certificate of compliance shall clearly identify each lot delivered and shall certify as to:

a. Conformance to the specified performance, testing, quality or dimensional requirements; and,

b. Suitability of the material or assembly for the use intended in the contract work.

The RPR shall be the sole judge as to whether the proposed "or equal" is suitable for use in the work.

The RPR reserves the right to refuse permission for use of materials or assemblies on the basis of certificates of compliance.

60-04 PLANT INSPECTION. The RPR or their authorized representative may inspect, at its source, any specified material or assembly to be used in the work. Manufacturing plants may be inspected from time to time for the purpose of determining compliance with specified manufacturing methods or materials to be used in the work and to obtain samples required for acceptance of the material or assembly.

Should the RPR conduct plant inspections, the following conditions shall exist:

a. The RPR shall have the cooperation and assistance of the Contractor and the producer with whom the Contractor has contracted for materials.

b. The RPR shall have full entry at all reasonable times to such parts of the plant that concern the manufacture or production of the materials being furnished.

c. If required by the RPR, the Contractor shall arrange for adequate office or working space that may be reasonably needed for conducting plant inspections. Place office or working space in a convenient location with respect to the plant.

It is understood and agreed that the Owner shall have the right to retest any material that has been tested and approved at the source of supply after it has been delivered to the site. The RPR shall have the right to reject only material which, when retested, does not meet the requirements of the contract, plans, or specifications.

60-05 ENGINEER/ RESIDENT PROJECT REPRESENTATIVE (RPR) FIELD OFFICE. An Engineer/RPR field office is not required.

60-06 STORAGE OF MATERIALS. Materials shall be stored to assure the preservation of their quality and fitness for the work. Stored materials, even though approved before storage, may again be inspected prior to their use in the work. Stored materials shall be located to facilitate their prompt inspection. The Contractor shall coordinate the storage of all materials with the RPR. Materials to be stored on airport property shall not create an obstruction to air navigation nor shall they interfere with the free and unobstructed movement of aircraft. Unless otherwise shown on the plans and/or CSPP, the storage of materials and the location of the Contractor's plant and parked equipment or vehicles shall be as directed by the RPR. Private property shall not be used for storage purposes without written permission of the Owner or lessee of such property. The Contractor shall make all arrangements and bear all expenses for the storage of materials on private property. Upon request, the Contractor shall furnish the RPR a copy of the property Owner's permission.

All storage sites on private or airport property shall be restored to their original condition by the Contractor at their expense, except as otherwise agreed to (in writing) by the Owner or lessee of the property.

60-07 UNACCEPTABLE MATERIALS. Any material or assembly that does not conform to the requirements of the contract, plans, or specifications shall be considered unacceptable and shall be rejected. The Contractor shall remove any rejected material or assembly from the site of the work, unless otherwise instructed by the RPR.

Rejected material or assembly, the defects of which have been corrected by the Contractor, shall not be returned to the site of the work until such time as the RPR has approved its use in the work.

60-08 OWNER FURNISHED MATERIALS. The Contractor shall furnish all materials required to complete the work, except those specified, if any, to be furnished by the Owner. Owner-furnished materials shall be made available to the Contractor at the location specified.

All costs of handling, transportation from the specified location to the site of work, storage, and installing Owner-furnished materials shall be included in the unit price bid for the contract item in which such Owner-furnished material is used.

After any Owner-furnished material has been delivered to the location specified, the Contractor shall be responsible for any demurrage, damage, loss, or other deficiencies that may occur during the Contractor's handling, storage, or use of such Owner-furnished material. The Owner will deduct from any monies due or to become due the Contractor any cost incurred by the Owner in making good such loss due to the Contractor's handling, storage, or use of Owner-furnished materials.

END OF SECTION 60

SECTION 70 LEGAL REGULATIONS AND RESPONSIBILITY TO PUBLIC

70-01 LAWS TO BE OBSERVED. The Contractor shall keep fully informed of all federal and state laws, all local laws, ordinances, and regulations and all orders and decrees of bodies or tribunals having any jurisdiction or authority, which in any manner affect those engaged or employed on the work, or which in any way affect the conduct of the work. The Contractor shall at all times observe and comply with all such laws, ordinances, regulations, orders, and decrees; and shall protect and indemnify the Owner and all their officers, agents, or servants against any claim or liability arising from or based on the violation of any such law, ordinance, regulation, order, or decree, whether by the Contractor or the Contractor's employees.

70-02 PERMITS, LICENSES, AND TAXES. The Contractor shall procure all permits and licenses, pay all charges, fees, and taxes, and give all notices necessary and incidental to the due and lawful execution of the work.

70-03 PATENTED DEVICES, MATERIALS, AND PROCESSES. If the Contractor is required or desires to use any design, device, material, or process covered by letters of patent or copyright, the Contractor shall provide for such use by suitable legal agreement with the Patentee or Owner. The Contractor and the surety shall indemnify and hold harmless the Owner, any third party, or political subdivision from any and all claims for infringement by reason of the use of any such patented design, device, material or process, or any trademark or copyright, and shall indemnify the Owner for any costs, expenses, and damages which it may be obliged to pay by reason of an infringement, at any time during the execution or after the completion of the work.

70-04 RESTORATION OF SURFACES DISTURBED BY OTHERS. The Owner reserves the right to authorize the construction, reconstruction, or maintenance of any public or private utility service, FAA or National Oceanic and Atmospheric Administration (NOAA) facility, or a utility service of another government agency at any time during the progress of the work. To the extent that such construction, reconstruction, or maintenance has been coordinated with the Owner, such authorized work (by others) must be shown on the plans and is indicated as follows: **N/A**.

Except as listed above, the Contractor shall not permit any individual, firm, or corporation to excavate or otherwise disturb such utility services or facilities located within the limits of the work without the written permission of the RPR.

Should the Owner of public or private utility service, FAA, or NOAA facility, or a utility service of another government agency be authorized to construct, reconstruct, or maintain such utility service or facility during the progress of the work, the Contractor shall cooperate with such Owners by arranging and performing the work in this contract to facilitate such construction, reconstruction or maintenance by others whether or not such work by others is listed above. When ordered as extra work by the RPR, the Contractor shall make all necessary repairs to the work which are due to such authorized work by others, unless otherwise provided for in the contract, plans, or specifications. It is understood and agreed that the Contractor shall not be entitled to make any claim for damages due to such authorized work by others or for any delay to the work resulting from such authorized work.

70-05 FEDERAL PARTICIPATION. The United States Government has agreed to reimburse the Owner for some portion of the contract costs. The contract work is subject to the inspection and approval of duly authorized representatives of the FAA Administrator. No requirement of this

contract shall be construed as making the United States a party to the contract nor will any such requirement interfere, in any way, with the rights of either party to the contract.

70-06 SANITARY, HEALTH, AND SAFETY PROVISIONS. The Contractor's worksite and facilities shall comply with applicable federal, state, and local requirements for health, safety and sanitary provisions.

70-07 PUBLIC CONVENIENCE AND SAFETY. The Contractor shall control their operations and those of their subcontractors and all suppliers, to assure the least inconvenience to the traveling public. Under all circumstances, safety shall be the most important consideration.

The Contractor shall maintain the free and unobstructed movement of aircraft and vehicular traffic with respect to their own operations and those of their own subcontractors and all suppliers in accordance with Section 40, paragraph 40-05, *Maintenance of Traffic,* and shall limit such operations for the convenience and safety of the traveling public as specified in Section 80, paragraph 80-04, *Limitation of Operations*.

The Contractor shall remove or control debris and rubbish resulting from its work operations at frequent intervals, and upon the order of the RPR. If the RPR determines the existence of Contractor debris in the work site represents a hazard to airport operations and the Contractor is unable to respond in a prompt and reasonable manner, the RPR reserves the right to assign the task of debris removal to a third party and recover the resulting costs as a liquidated damage against the Contractor.

70-08 CONSTRUCTION SAFETY AND PHASING PLAN (CSPP). The Contractor shall complete the work in accordance with the approved Construction Safety and Phasing Plan (CSPP) developed in accordance with AC 150/5370-2, Operational Safety on Airports During Construction. The CSPP is on sheet(s) **GC101 to GC501** of the project plans.

70-09 USE OF EXPLOSIVES. The use of explosives is not permitted on this project.

70-10 PROTECTION AND RESTORATION OF PROPERTY AND LANDSCAPE. The Contractor shall be responsible for the preservation of all public and private property, and shall protect carefully from disturbance or damage all land monuments and property markers until the Engineer/RPR has witnessed or otherwise referenced their location and shall not move them until directed.

The Contractor shall be responsible for all damage or injury to property of any character, during the execution of the work, resulting from any act, omission, neglect, or misconduct in manner or method of executing the work, or at any time due to defective work or materials, and said responsibility shall not be released until the project has been completed and accepted.

When or where any direct or indirect damage or injury is done to public or private property by or on account of any act, omission, neglect, or misconduct in the execution of the work, or in consequence of the non-execution thereof by the Contractor, the Contractor shall restore, at their expense, such property to a condition similar or equal to that existing before such damage or injury was done, by repairing, or otherwise restoring as may be directed, or the Contractor shall make good such damage or injury in an acceptable manner.

70-11 RESPONSIBILITY FOR DAMAGE CLAIMS. The Contractor shall indemnify and hold harmless the Engineer/RPR and the Owner and their officers, agents, and employees from all suits, actions, or claims, of any character, brought because of any injuries or damage received or sustained by any person, persons, or property on account of the operations of the Contractor; or on account of or in consequence of any neglect in safeguarding the work; or through use of unacceptable materials in constructing the work; or because of any act or omission, neglect, or misconduct of said Contractor; or because of any claims or amounts recovered from any infringements of patent, trademark, or copyright; or from any claims or amounts arising or recovered under the “Workmen’s Compensation Act,” or any other law, ordinance, order, or decree. Money due the Contractor under and by virtue of their own contract considered necessary by the Owner for such purpose may be retained for the use of the Owner or, in case no money is due, their own surety may be held until such suits, actions, or claims for injuries or damages shall have been settled and suitable evidence to that effect furnished to the Owner, except that money due the Contractor will not be withheld when the Contractor produces satisfactory evidence that he or she is adequately protected by public liability and property damage insurance.

70-12 THIRD PARTY BENEFICIARY CLAUSE. It is specifically agreed between the parties executing the contract that it is not intended by any of the provisions of any part of the contract to create for the public or any member thereof, a third-party beneficiary or to authorize anyone not a party to the contract to maintain a suit for personal injuries or property damage pursuant to the terms or provisions of the contract.

70-13 OPENING SECTIONS OF THE WORK TO TRAFFIC. If it is necessary for the Contractor to complete portions of the contract work for the beneficial occupancy of the Owner prior to completion of the entire contract, such “phasing” of the work must be specified below and indicated on the approved Construction Safety and Phasing Plan (CSPP) and the project plans. When so specified, the Contractor shall complete such portions of the work on or before the date specified or as otherwise specified.

Upon completion of any portion of work listed above, such portion shall be accepted by the Owner in accordance with Section 50, paragraph 50-14, *Partial Acceptance*.

No portion of the work may be opened by the Contractor until directed by the Owner in writing. Should it become necessary to open a portion of the work to traffic on a temporary or intermittent basis, such openings shall be made when, in the opinion of the RPR, such portion of the work is in an acceptable condition to support the intended traffic. Temporary or intermittent openings are considered to be inherent in the work and shall not constitute either acceptance of the portion of the work so opened or a waiver of any provision of the contract. Any damage to the portion of the work so opened that is not attributable to traffic which is permitted by the Owner shall be repaired by the Contractor at their expense.

The Contractor shall make their own estimate of the inherent difficulties involved in completing the work under the conditions herein described and shall not claim any added compensation by reason of delay or increased cost due to opening a portion of the contract work.

The Contractor must conform to safety standards contained AC 150/5370-2 and the approved CSPP.

Contractor shall refer to the plans, specifications, and the approved CSPP to identify barricade requirements, temporary and/or permanent markings, airfield lighting, guidance signs and other safety requirements prior to opening up sections of work to traffic.

70-14 CONTRACTOR'S RESPONSIBILITY FOR WORK. Until the RPR's final written acceptance of the entire completed work, excepting only those portions of the work accepted in accordance with Section 50, paragraph 50-14, *Partial Acceptance*, the Contractor shall have the charge and care thereof and shall take every precaution against injury or damage to any part due to the action of the elements or from any other cause, whether arising from the execution or from the non-execution of the work. The Contractor shall rebuild, repair, restore, and make good all injuries or damages to any portion of the work occasioned by any of the above causes before final acceptance and shall bear the expense thereof except damage to the work due to unforeseeable causes beyond the control of and without the fault or negligence of the Contractor, including but not restricted to acts of God such as earthquake, tidal wave, tornado, hurricane or other cataclysmic phenomenon of nature, or acts of the public enemy or of government authorities.

If the work is suspended for any cause whatever, the Contractor shall be responsible for the work and shall take such precautions necessary to prevent damage to the work. The Contractor shall provide for normal drainage and shall erect necessary temporary structures, signs, or other facilities at their own expense. During such period of suspension of work, the Contractor shall properly and continuously maintain in an acceptable growing condition all living material in newly established planting, seeding, and sodding furnished under the contract, and shall take adequate precautions to protect new tree growth and other important vegetative growth against injury.

70-15 CONTRACTOR'S RESPONSIBILITY FOR UTILITY SERVICE AND FACILITIES OF OTHERS. As provided in paragraph 70-04, *Restoration of Surfaces Disturbed by Others*, the Contractor shall cooperate with the owner of any public or private utility service, FAA or NOAA, or a utility service of another government agency that may be authorized by the Owner to construct, reconstruct or maintain such utility services or facilities during the progress of the work. In addition, the Contractor shall control their operations to prevent the unscheduled interruption of such utility services and facilities.

To the extent that such public or private utility services, FAA, or NOAA facilities, or utility services of another governmental agency are known to exist within the limits of the contract work, the approximate locations have been indicated on the plans and/or in the contract documents.

It is understood and agreed that the Owner does not guarantee the accuracy or the completeness of the location information relating to existing utility services, facilities, or structures that may be shown on the plans or encountered in the work. Any inaccuracy or omission in such information shall not relieve the Contractor of the responsibility to protect such existing features from damage or unscheduled interruption of service.

It is further understood and agreed that the Contractor shall, upon execution of the contract, notify the Owners of all utility services or other facilities of their plan of operations. Such notification shall be in writing addressed to "The Person to Contact" as provided in this paragraph and paragraph 70-04, *Restoration of Surfaces Disturbed By Others*. A copy of each notification shall be given to the RPR.

In addition to the general written notification provided, it shall be the responsibility of the Contractor to keep such individual Owners advised of changes in their plan of operations that would affect such Owners.

Prior to beginning the work in the general vicinity of an existing utility service or facility, the Contractor shall again notify each such Owner of their plan of operation. If, in the Contractor's opinion, the Owner's assistance is needed to locate the utility service or facility or the presence of a representative of the Owner is desirable to observe the work, such advice should be included in the notification. Such notification shall be given by the most expeditious means to reach the utility owner's "Person to Contact" no later than two normal business days prior to the Contractor's commencement of operations in such general vicinity. The Contractor shall furnish a written summary of the notification to the RPR.

The Contractor's failure to give the two days' notice shall be cause for the Owner to suspend the Contractor's operations in the general vicinity of a utility service or facility.

Where the outside limits of an underground utility service have been located and staked on the ground, the Contractor shall be required to use hand excavation methods within 3 feet (1 m) of such outside limits at such points as may be required to ensure protection from damage due to the Contractor's operations.

Should the Contractor damage or interrupt the operation of a utility service or facility by accident or otherwise, the Contractor shall immediately notify the proper authority and the RPR and shall take all reasonable measures to prevent further damage or interruption of service. The Contractor, in such events, shall cooperate with the utility service or facility owner and the RPR continuously until such damage has been repaired and service restored to the satisfaction of the utility or facility owner.

The Contractor shall bear all costs of damage and restoration of service to any utility service or facility due to their operations whether due to negligence or accident. The Owner reserves the right to deduct such costs from any monies due or which may become due the Contractor, or their own surety.

70-15.1 FAA FACILITIES AND CABLE RUNS. The Contractor is hereby advised that the construction limits of the project include existing facilities and buried cable runs that are owned, operated and maintained by the FAA. The Contractor, during the execution of the project work, shall comply with the following:

a. The Contractor shall permit FAA maintenance personnel the right of access to the project work site for purposes of inspecting and maintaining all existing FAA owned facilities.

b. The Contractor shall provide notice to the FAA Air Traffic Organization (ATO)/Technical Operations/System Support Center (SSC) Point-of-Contact through the airport Owner a minimum of seven (7) calendar days prior to commencement of construction activities in order to permit sufficient time to locate and mark existing buried cables and to schedule any required facility outages.

c. If execution of the project work requires a facility outage, the Contractor shall contact the FAA Point-of-Contact a minimum of 72 hours prior to the time of the required outage.

d. Any damage to FAA cables, access roads, or FAA facilities during construction caused by the Contractor's equipment or personnel whether by negligence or accident will require the Contractor to repair or replace the damaged cables, access road, or FAA facilities to FAA requirements. The Contractor shall not bear the cost to repair damage to underground facilities or utilities improperly located by the FAA.

e. If the project work requires the cutting or splicing of FAA owned cables, the FAA Point-of-Contact shall be contacted a minimum of 72 hours prior to the time the cable work commences. The FAA reserves the right to have a FAA representative on site to observe the splicing of the cables as a condition of acceptance. All cable splices are to be accomplished in accordance with FAA specifications and require approval by the FAA Point-of-Contact as a condition of acceptance by the Owner. The Contractor is hereby advised that FAA restricts the location of where splices may be installed. If a cable splice is required in a location that is not permitted by FAA, the Contractor shall furnish and install a sufficient length of new cable that eliminates the need for any splice.

70-16 FURNISHING RIGHTS-OF-WAY. The Owner will be responsible for furnishing all rights-of-way upon which the work is to be constructed in advance of the Contractor's operations.

70-17 PERSONAL LIABILITY OF PUBLIC OFFICIALS. In carrying out any of the contract provisions or in exercising any power or authority granted by this contract, there shall be no liability upon the Engineer, RPR, their authorized representatives, or any officials of the Owner either personally or as an official of the Owner. It is understood that in such matters they act solely as agents and representatives of the Owner.

70-18 NO WAIVER OF LEGAL RIGHTS. Upon completion of the work, the Owner will expeditiously make final inspection and notify the Contractor of final acceptance. Such final acceptance, however, shall not preclude or stop the Owner from correcting any measurement, estimate, or certificate made before or after completion of the work, nor shall the Owner be precluded or stopped from recovering from the Contractor or their surety, or both, such overpayment as may be sustained, or by failure on the part of the Contractor to fulfill their obligations under the contract. A waiver on the part of the Owner of any breach of any part of the contract shall not be held to be a waiver of any other or subsequent breach.

The Contractor, without prejudice to the terms of the contract, shall be liable to the Owner for latent defects, fraud, or such gross mistakes as may amount to fraud, or as regards the Owner's rights under any warranty or guaranty.

70-19 ENVIRONMENTAL PROTECTION. The Contractor shall comply with all federal, state, and local laws and regulations controlling pollution of the environment. The Contractor shall take necessary precautions to prevent pollution of streams, lakes, ponds, and reservoirs with fuels, oils, asphalts, chemicals, or other harmful materials and to prevent pollution of the atmosphere from particulate and gaseous matter.

70-20 ARCHAEOLOGICAL AND HISTORICAL FINDINGS. Unless otherwise specified in this subsection, the Contractor is advised that the site of the work is not within any property, district, or site, and does not contain any building, structure, or object listed in the current National Register of Historic Places published by the United States Department of Interior.

Should the Contractor encounter, during their operations, any building, part of a building, structure, or object that is incongruous with its surroundings, the Contractor shall immediately cease operations in that location and notify the RPR. The RPR will immediately investigate the Contractor's finding and the Owner will direct the Contractor to either resume operations or to suspend operations as directed.

Should the Owner order suspension of the Contractor's operations in order to protect an archaeological or historical finding, or order the Contractor to perform extra work, such shall be covered by an appropriate contract change order or supplemental agreement as provided in Section 40, paragraph 40-04, *Extra Work,* and Section 90, paragraph 90-05, *Payment for Extra Work*. If appropriate, the contract change order or supplemental agreement shall include an extension of contract time in accordance with Section 80, paragraph 80-07, *Determination and Extension of Contract Time*.

70-21 INSURANCE REQUIREMENTS.

Refer to the insurance requirements under the Standard Terms & Conditions section in the County's eProcurement portal, OpenGov.

END OF SECTION 70

SECTION 80 EXECUTION AND PROGRESS

80-01 SUBLETTING OF CONTRACT. The Owner will not recognize any subcontractor on the work. The Contractor shall at all times when work is in progress be represented either in person, by a qualified superintendent, or by other designated, qualified representative who is duly authorized to receive and execute orders of the Resident Project Representative (RPR).

The Contractor shall perform, with his organization, an amount of work equal to at least **5** percent of the total contract cost.

Should the Contractor elect to assign their contract, said assignment shall be concurred in by the surety, shall be presented for the consideration and approval of the Owner, and shall be consummated only on the written approval of the Owner.

The Contractor shall provide copies of all subcontracts to the RPR 14 days prior to being utilized on the project. As a minimum, the information shall include the following:

- Subcontractor's legal company name.
- Subcontractor's legal company address, including County name.
- Principal contact person's name, telephone and fax number.
- Complete narrative description, and dollar value of the work to be performed by the subcontractor.
- Copies of required insurance certificates in accordance with the specifications.
- Minority/ non-minority status.

80-02 NOTICE TO PROCEED (NTP). The Owners notice to proceed will state the date on which contract time commences. The Contractor is expected to commence project operations within **seven (7)** days of the NTP date. The Contractor shall notify the RPR at least 24 hours in advance of the time contract operations begins. The Contractor shall not commence any actual operations prior to the date on which the notice to proceed is issued by the Owner.

80-03 EXECUTION AND PROGRESS. Unless otherwise specified, the Contractor shall submit their coordinated construction schedule showing all work activities for the RPR's review and acceptance at least **10 days** prior to the start of work. The Contractor's progress schedule, once accepted by the RPR, will represent the Contractor's baseline plan to accomplish the project in accordance with the terms and conditions of the Contract. The RPR will compare actual Contractor progress against the baseline schedule to determine that status of the Contractor's performance. The Contractor shall provide sufficient materials, equipment, and labor to guarantee the completion of the project in accordance with the plans and specifications within the time set forth in the proposal.

If the Contractor falls significantly behind the submitted schedule, the Contractor shall, upon the RPR's request, submit a revised schedule for completion of the work within the contract time and modify their operations to provide such additional materials, equipment, and labor necessary to meet the revised schedule. Should the execution of the work be discontinued for any reason, the Contractor shall notify the RPR at least 24 hours in advance of resuming operations.

The Contractor shall not commence any actual construction prior to the date on which the NTP is issued by the Owner.

The Contractor shall maintain the work schedule and provide an update and analysis of the progress schedule on a twice monthly basis, or as otherwise specified in the contract. Submission of the work schedule shall not relieve the Contractor of overall responsibility for scheduling, sequencing, and coordinating all work to comply with the requirements of the contract.

80-04 LIMITATION OF OPERATIONS. The Contractor shall control their operations and the operations of their subcontractors and all suppliers to provide for the free and unobstructed movement of aircraft in the air operations areas (AOA) of the airport.

When the work requires the Contractor to conduct their operations within an AOA of the airport, the work shall be coordinated with airport operations (through the RPR) at least 48 hours prior to commencement of such work. The Contractor shall not close an AOA until so authorized by the RPR and until the necessary temporary marking, signage and associated lighting is in place as provided in Section 70, paragraph 70-08, *Construction Safety and Phasing Plan (CSPP)*.

When the contract work requires the Contractor to work within an AOA of the airport on an intermittent basis (intermittent opening and closing of the AOA), the Contractor shall maintain constant communications as specified; immediately obey all instructions to vacate the AOA; and immediately obey all instructions to resume work in such AOA. Failure to maintain the specified communications or to obey instructions shall be cause for suspension of the Contractor's operations in the AOA until satisfactory conditions are provided. The areas of the AOA identified in the Construction Safety Phasing Plan (CSPP) and as listed below, cannot be closed to operating aircraft to permit the Contractor's operations on a continuous basis and will therefore be closed to aircraft operations intermittently as follows:

The Contractor shall be required to conform to safety standards contained in AC 150/5370-2, Operational Safety on Airports During Construction and the approved CSPP.

80-04.1 OPERATIONAL SAFETY ON AIRPORT DURING CONSTRUCTION. All Contractors' operations shall be conducted in accordance with the approved project Construction Safety and Phasing Plan (CSPP) and the Safety Plan Compliance Document (SPCD) and the provisions set forth within the current version of AC 150/5370-2, Operational Safety on Airports During Construction. The CSPP included within the contract documents conveys minimum requirements for operational safety on the airport during construction activities. The Contractor shall prepare and submit a SPCD that details how it proposes to comply with the requirements presented within the CSPP.

The Contractor shall implement all necessary safety plan measures prior to commencement of any work activity. The Contractor shall conduct routine checks to assure compliance with the safety plan measures.

The Contractor is responsible to the Owner for the conduct of all subcontractors it employs on the project. The Contractor shall assure that all subcontractors are made aware of the requirements of the CSPP and SPCD and that they implement and maintain all necessary measures.

No deviation or modifications may be made to the approved CSPP and SPCD unless approved in writing by the Owner. The necessary coordination actions to review Contractor proposed modifications to an approved CSPP or approved SPCD can require a significant amount of time.

80-05 CHARACTER OF WORKERS, METHODS, AND EQUIPMENT. The Contractor shall, at all times, employ sufficient labor and equipment for prosecuting the work to full completion in the manner and time required by the contract, plans, and specifications.

All workers shall have sufficient skill and experience to perform properly the work assigned to them. Workers engaged in special work or skilled work shall have sufficient experience in such work and in the operation of the equipment required to perform the work satisfactorily.

Any person employed by the Contractor or by any subcontractor who violates any operational regulations or operational safety requirements and, in the opinion of the RPR, does not perform his work in a proper and skillful manner or is intemperate or disorderly shall, at the written request of the RPR, be removed immediately by the Contractor or subcontractor employing such person, and shall not be employed again in any portion of the work without approval of the RPR.

Should the Contractor fail to remove such person or persons, or fail to furnish suitable and sufficient personnel for the proper execution of the work, the RPR may suspend the work by written notice until compliance with such orders.

All equipment that is proposed to be used on the work shall be of sufficient size and in such mechanical condition as to meet requirements of the work and to produce a satisfactory quality of work. Equipment used on any portion of the work shall not cause injury to previously completed work, adjacent property, or existing airport facilities due to its use.

When the methods and equipment to be used by the Contractor in accomplishing the work are not prescribed in the contract, the Contractor is free to use any methods or equipment that will accomplish the work in conformity with the requirements of the contract, plans, and specifications.

When the contract specifies the use of certain methods and equipment, such methods and equipment shall be used unless otherwise authorized by the RPR. If the Contractor desires to use a method or type of equipment other than specified in the contract, the Contractor may request authority from the RPR to do so. The request shall be in writing and shall include a full description of the methods and equipment proposed and of the reasons for desiring to make the change. If approval is given, it will be on the condition that the Contractor will be fully responsible for producing work in conformity with contract requirements. If, after trial use of the substituted methods or equipment, the RPR determines that the work produced does not meet contract requirements, the Contractor shall discontinue the use of the substitute method or equipment and shall complete the remaining work with the specified methods and equipment. The Contractor shall remove any deficient work and replace it with work of specified quality, or take such other corrective action as the RPR may direct. No change will be made in basis of payment for the contract items involved nor in contract time as a result of authorizing a change in methods or equipment under this paragraph.

80-06 TEMPORARY SUSPENSION OF THE WORK. The Owner shall have the authority to suspend the work wholly, or in part, for such period or periods the Owner may deem necessary, due to unsuitable weather, or other conditions considered unfavorable for the execution of the

work, or for such time necessary due to the failure on the part of the Contractor to carry out orders given or perform any or all provisions of the contract.

In the event that the Contractor is ordered by the Owner, in writing, to suspend work for some unforeseen cause not otherwise provided for in the contract and over which the Contractor has no control, the Contractor may be reimbursed for actual money expended on the work during the period of shutdown. No allowance will be made for anticipated profits. The period of shutdown shall be computed from the effective date of the written order to suspend work to the effective date of the written order to resume the work. Claims for such compensation shall be filed with the RPR within the time period stated in the RPR's order to resume work. The Contractor shall submit with their own claim information substantiating the amount shown on the claim. The RPR will forward the Contractor's claim to the Owner for consideration in accordance with local laws or ordinances. No provision of this article shall be construed as entitling the Contractor to compensation for delays due to inclement weather or for any other delay provided for in the contract, plans, or specifications.

If it becomes necessary to suspend work for an indefinite period, the Contractor shall store all materials in such manner that they will not become an obstruction nor become damaged in any way. The Contractor shall take every precaution to prevent damage or deterioration of the work performed and provide for normal drainage of the work. The Contractor shall erect temporary structures where necessary to provide for traffic on, to, or from the airport.

80-07 DETERMINATION AND EXTENSION OF CONTRACT TIME. The number of calendar days shall be stated in the proposal and contract and shall be known as the Contract Time.

If the contract time requires extension for reasons beyond the Contractor's control, it shall be adjusted as follows:

80-07.1 CONTRACT TIME BASED ON CALENDAR DAYS. Contract Time based on calendar days shall consist of the number of calendar days stated in the contract counting from the effective date of the Notice to Proceed and including all Saturdays, Sundays, holidays, and non-work days. All calendar days elapsing between the effective dates of the Owner's orders to suspend and resume all work, due to causes not the fault of the Contractor, shall be excluded.

At the time of final payment, the contract time shall be increased in the same proportion as the cost of the actually completed quantities bears to the cost of the originally estimated quantities in the proposal. Such increase in the contract time shall not consider either cost of work or the extension of contract time that has been covered by a change order or supplemental agreement. Charges against the contract time will cease as of the date of final acceptance.

80-08 FAILURE TO COMPLETE ON TIME. For each calendar day or working day, as specified in the contract, that any work remains uncompleted after the contract time (including all extensions and adjustments as provided in paragraph 80-07, *Determination and Extension of Contract Time*) the sum specified in the contract and proposal as liquidated damages (LD) will be deducted from any money due or to become due the Contractor or their own surety. Such deducted sums shall not be deducted as a penalty but shall be considered as liquidation of a reasonable portion of damages including but not limited to additional engineering services that will be incurred by the Owner should the Contractor fail to complete the work in the time provided in their contract

Schedule	Liquidated Damages Cost	Allowed Construction Time
Start to SC*	$1,500.00/day	120 Calendar Days
SC* to FC**	$1,500.00/day	30 Calendar Days

The maximum construction time allowed for the project will not be more than **150** calendar days. Permitting the Contractor to continue and finish the work or any part of it after the time fixed for its completion, or after the date to which the time for completion may have been extended, will in no way operate as a wavier on the part of the Owner of any of its rights under the contract.

80-09 DEFAULT AND TERMINATION OF CONTRACT. The Contractor shall be considered in default of their contract and such default will be considered as cause for the Owner to terminate the contract for any of the following reasons, if the Contractor:

a. Fails to begin the work under the contract within the time specified in the Notice to Proceed, or

b. Fails to perform the work or fails to provide sufficient workers, equipment and/or materials to assure completion of work in accordance with the terms of the contract, or

c. Performs the work unsuitably or neglects or refuses to remove materials or to perform anew such work as may be rejected as unacceptable and unsuitable, or

d. Discontinues the execution of the work, or

e. Fails to resume work which has been discontinued within a reasonable time after notice to do so, or

f. Becomes insolvent or is declared bankrupt, or commits any act of bankruptcy or insolvency, or

g. Allows any final judgment to stand against the Contractor unsatisfied for a period of 10 days, or

h. Makes an assignment for the benefit of creditors, or

i. For any other cause whatsoever, fails to carry on the work in an acceptable manner.

Should the Owner consider the Contractor in default of the contract for any reason above, the Owner shall immediately give written notice to the Contractor and the Contractor’s surety as to the reasons for considering the Contractor in default and the Owner’s intentions to terminate the contract.

If the Contractor or surety, within a period of 10 days after such notice, does not proceed in accordance therewith, then the Owner will, upon written notification from the RPR of the facts of such delay, neglect, or default and the Contractor’s failure to comply with such notice, have full power and authority without violating the contract, to take the execution of the work out of the hands of the Contractor. The Owner may appropriate or use any or all materials and equipment that have been mobilized for use in the work and are acceptable and may enter into an agreement for the completion of said contract according to the terms and provisions thereof, or use such other methods as in the opinion of the RPR will be required for the completion of said contract in an acceptable manner.

All costs and charges incurred by the Owner, together with the cost of completing the work under contract, will be deducted from any monies due or which may become due the Contractor. If such expense exceeds the sum which would have been payable under the contract, then the Contractor and the surety shall be liable and shall pay to the Owner the amount of such excess.

80-10 TERMINATION FOR NATIONAL EMERGENCIES. The Owner shall terminate the contract or portion thereof by written notice when the Contractor is prevented from proceeding with the construction contract as a direct result of an Executive Order of the President with respect to the execution of war or in the interest of national defense.

When the contract, or any portion thereof, is terminated before completion of all items of work in the contract, payment will be made for the actual number of units or items of work completed at the contract price or as mutually agreed for items of work partially completed or not started. No claims or loss of anticipated profits shall be considered.

Reimbursement for organization of the work, and other overhead expenses, (when not otherwise included in the contract) and moving equipment and materials to and from the job will be considered, the intent being that an equitable settlement will be made with the Contractor.

Acceptable materials, obtained or ordered by the Contractor for the work and that are not incorporated in the work shall, at the option of the Contractor, be purchased from the Contractor at actual cost as shown by receipted bills and actual cost records at such points of delivery as may be designated by the RPR.

Termination of the contract or a portion thereof shall neither relieve the Contractor of their responsibilities for the completed work nor shall it relieve their surety of its obligation for and concerning any just claim arising out of the work performed.

80-11 WORK AREA, STORAGE AREA AND SEQUENCE OF OPERATIONS. The Contractor shall obtain approval from the RPR prior to beginning any work in all areas of the airport. No operating runway, taxiway, or air operations area (AOA) shall be crossed, entered, or obstructed while it is operational. The Contractor shall plan and coordinate work in accordance with the approved CSPP and SPCD.

END OF SECTION 80

ATTACHMENT "A"

TO SECTION 80

CONSTRUCTION SAFETY AND PHASING PLAN (CSPP)

FOR THE CONSTRUCTION OF

AIR TRAFFIC CONTROL TOWER REHABILITATION

AT

FLAGLER EXECUTIVE AIRPORT
FLAGLER COUNTY, FLORIDA

JULY 2026

TABLE OF CONTENTS

1.0 PURPOSE

2.0 SCOPE OF PROJECT AND CSPP

3.0 PLAN REQUIREMENTS

- 3.1 Coordination
  - a. Pre-construction Conference
  - b. Contractor Progress Meetings
  - c. Scope or Schedule Changes
  - d. FAA ATO Coordination
  - e. Pre-Paving Meeting
  - f. Payment
- 3.2 Phasing
  - a. Phase Elements (Work Areas)
  - b. Construction Work Phasing Requirements
- 3.3 Areas and Operations Affected by the Construction Activity
  - a. Identification of Affected Areas
  - b. Mitigation of Effects
- 3.4 Protection of Navigational Aids (NAVAIDS)
- 3.5 Contractor Access
  - a. Location of Stockpiled Construction Materials
  - b. Vehicle and Pedestrian Operations
  - c. Security
- 3.6 Wildlife Management
  - a. Trash
  - b. Standing Water
  - c. Tall Grass and Seeds
  - d. Poorly Maintained Fencing and Gates
  - e. Disruption of Existing Wildlife Habitat
- 3.7 Foreign Object Debris (FOD) Management
- 3.8 Hazardous Materials (HAZMAT) Management
- 3.9 Notification of Construction Activity
  - a. Maintenance of a List of Responsible Representatives/Point of Contact
  - b. Notices to Airman (NOTAM)
  - c. Emergency Notification Procedures
  - d. Accidents
  - e. Coordination with NSBFD Personnel
  - f. Notification to the FAA
- 3.10 Inspection Requirements
  - a. Daily (or more frequent) Inspections
  - b. Inspecting Areas Re-opened to Aircraft Traffic
  - c. Final Inspections
- 3.11 Underground Utilities
- 3.12 Penalties
- 3.13 Special Conditions
- 3.14 Runway and Taxiway Visual Aids
  - a. General
  - b. Markings
  - c. Lighting and Visual NAVAIDS
  - d. Signs
  - e. Maintenance of Airport Lighting

3.15 Marking and Signs for Access Routes
3.16 Hazard Marking and Lighting
a. Purpose
b. Equipment
3.17 Work Zone Lighting for Nighttime Construction
3.18 Protection of Airfield Areas
a. Runway Safety Area (RSA)
b. Runway Object Free Area (ROFA)
c. Taxiway Safety Area (TSA)
d. Taxiway Object Free Area (TOFA)
e. Obstacle Free Zone (OFZ)
f. Runway Approach/Departure Surfaces
3.19 Other Limitations on Construction
A. Prohibitions
B. Restrictions

APPENDICES:

APPENDIX 1 – Construction Safety and Phasing Plan Drawings – See Contract Drawings

CONSTRUCTION SAFETY AND PHASING PLAN (CSPP)

1.0 PURPOSE.

Aviation safety is the primary consideration at airports, especially during construction. The Owner's Construction Safety and Phasing Plan (CSPP) and the contractor's Safety Plan Compliance Certification (SPCC) are the primary tools to ensure safety compliance when coordinating construction activities with airport operations. These documents identify aspects of the construction project that pose a potential safety hazard to airport operations and outline respective mitigation procedures for each hazard.

The CSPP sets forth benchmarks and requirements for the project to help maintain the highest levels of safety, security and efficiency at the airport at the time of construction. Requirements for this CSPP were developed from FAA Advisory Circular (AC) 150/5370-2 Operational Safety on Airports During Construction, latest edition.

The CSPP is a standalone document, written to correspond with the safety and security requirements set forth in the AC, the airport safety and security requirements, and local codes and requirements. The CSPP is to be used by all personnel involved in the project. The CSPP covers the actions of not only the construction personnel and equipment, but also the action of inspection personnel and airport staff.

This document has been developed in order to minimize interruptions to airport operations, reduce construction costs, and maximize the performance and safety of construction activity. Strict adherence to the provisions of the CSPP by all personnel assigned to or visiting the construction site is mandatory

In the event the Contractor's activities are found in non-compliance with the provisions of the CSPP, the Owner's Representative will direct the Contractor, in writing, to immediately cease those operations in violation. In addition, a safety meeting will be conducted for the purpose of reviewing those provisions in the CSPP which were violated. The Contractor will not be allowed to resume any construction operations until conclusion of the safety meeting and all corrective actions have been implemented.

2.0 SCOPE OF PROJECT AND CSPP.

The proposed project generally includes the rehabilitation of the existing air traffic control tower at the Flagler Executive Airport. The project includes, structural, architectural, mechanical, electrical, plumbing, access control, and civil/site improvements, repairs, replacements, and new installations.

Safety, maintaining aircraft operations, and construction costs are all interrelated. The phasing of this project was carefully determined to reduce significant impact on hangar access and aircraft taxiing operations. Since safety must not be compromised, the Owner must strike a balance between maintaining aircraft operations and construction costs. This balance will vary widely depending on the operational needs and resources of the airport and will require early coordination with airport users and the FAA. As the project design progresses, the necessary construction locations, activities and associated costs will be identified. As they are identified, their impact on airport operations must be assessed. Adjustments are made to the proposed construction activities, often by phasing the project and/or to airport operations in order to maintain operational safety. This planning effort will ultimately result in a project CSPP. The development of the CSPP takes place through the following five steps:

1. Identify Affected Areas
2. Describe Current Operations
3. Allow for Temporary Changes to Operations
4. Take Required Measures to Revise Operations
5. Manage Safety Risk

3.0 PLAN REQUIREMENTS.

3.1 COORDINATION. The following items shall be coordinated as required:

a. **Pre-construction Conference.** A pre-construction meeting will be conducted to discuss contract requirements, operational safety, testing, quality control, quality acceptance, security, safety, labor requirements, environmental factors, and other issues. All parties affected by the construction will be asked to attend including, but not limited to the Owner, ATCT Personnel, Tenants, Contractor, Subcontractors, and Engineer.

At the pre-construction meeting, the Contractor shall submit a plan of operation and schedule of work to the Engineer for review and approval. The Contractor's plan of operation shall indicate, in detail, the amount of construction planned, and the number of shifts and/or overtime operations proposed for the project. The schedule of work shall clearly indicate the sequence of work to be performed. The Contractor shall conform, at all times, to the requirements of these provisions and with current safety practices, rules, regulations and security requirements of the Owner. To the extent practicable, the pre-construction meeting will be held prior to issuance of a Notice to Proceed.

b. **Contractor Progress Meetings.** A minimum of one progress meeting to discuss scheduling and coordination shall be held each week unless otherwise directed by the Owner, throughout the duration of the Contract, between the Owner, Contractor, Engineer and any other interested parties at a time and place to be designated by the Engineer. These meetings shall include a detailed discussion of construction phasing and safety with regard to the Contractor's compliance with the requirements stipulated in the Contract Documents.

In attendance at these meetings shall be a Contractor's representative with the authority to make decisions concerning the scheduling and coordination of work. Progress meetings shall be facilitated by the Engineer. Operational safety shall be a standing agenda item during progress meetings throughout the construction project.

c. **Scope or Schedule Changes.** Changes in the Scope of Work or Project Schedule shall be governed by Section 40 and Section 80 of the Contract Documents. Any proposed change that results in a deviation from the established CSPP as expressed by the Contract Documents must be submitted to the FAA and Owner for review and approval. FAA review and approval can be expected to take a minimum of sixty (60) business days.

d. **FAA ATO Coordination.** Early coordination with Federal Aviation Administration (FAA) Air Traffic Organization (ATO) is required to schedule airway facility shutdowns and restarts. Relocation or adjustments to NAVAIDs, or changes to final grades in critical areas, may require an FAA flight inspection prior to restarting the facility. Flight inspections shall be coordinated and scheduled well in advance of the intended facility restart. Flight inspections shall be as required by technical specifications or special provisions.

e. **Pre-Paving Meeting.** If paving is included in this project, a pre-paving meeting will be held to discuss the status of preliminary submittals, the Engineer's inspection of the plant and laboratory, test section requirements, paving plan requirements, and production requirements.

f. **Payment.** The cost of complying with the requirements of this section, including but not limited to scheduling; providing flag people; construction, maintenance of and removal of temporary access roads and staging areas; providing, placing, relocating, maintaining and removing temporary barricades; protection of aircraft and vehicular traffic; installation, maintenance and removal of temporary airfield markings; maintenance of airport lighting circuits; cleaning of paved surfaces; restoration of surfaces disturbed as a result of the Contractor's operations; providing, maintaining, and removing warning signs, hazard markings, barricades, lights, or lighted closed runway markers; providing, maintaining, and removing temporary drainage; providing, maintaining, and removing temporary access gates; providing padlocks for access gates; and all security requirements shall be included under Pay Item GP 80,

Construction Safety and Phasing Plan.

3.2 PHASING.

a. Phase Elements (Work Areas)

Phase Descriptions: The work of the project shall be completed in **one (1) phase** and is anticipated to be completed over a period of **150 consecutive calendar days**. Phase I is anticipated to receive a Notice To Proceed in late 2026, and the full scope of work, described above, will be completed within this phase.

Work Area Descriptions: The work of the project shall be completed in a single work area. The work area is described below:

Phase I:

Work Area: Includes the area inside the Air Traffic Control Tower secured area.

b. Construction Work Phasing Requirements

The Contractor shall obtain approval from the Engineer prior to beginning any work in all areas of the airport. No active runway or taxiway shall be crossed, entered, or obstructed at any time. The Contractor shall plan and coordinate his/her work in such a manner as to ensure safety and a minimum of hindrance to airport operations. All Contractor equipment and material stockpiles shall be stored at locations determined during construction or as shown on the Construction Safety and Phasing Plan Drawings (Appendix 1). No equipment will be allowed to park within the approach area of an active runway at any time.

During the work under this Contract, the Owner will make such arrangements to coordinate aircraft movements and Airport operations as necessary to conform to the construction procedures as outlined below and as shown on the Contract Drawings. The Contractor shall give adequate notice to the Engineer, so as to afford time to coordinate construction with the Owner. No work shall proceed in any area without prior approval.

The Contractor shall always confine construction operations to the construction work area and designated haul routes. Contractor personnel, equipment, stored materials, subcontractors and suppliers will not be allowed in any other area within the Air Operations Area and within the Airport boundaries without prior approval of the Owner or Engineer.

The Engineer will perform a visual site assessment before the Contractor proceeds into a new work area. The Contractor shall be held responsible for all repairs and cleanup costs incurred as a result of the Contractor's construction operations. Restoration shall be the complete return of all work areas to the original conditions.

Temporary cables in grass areas shall be marked with barricades.

Prior to the start of construction operations, the Contractor shall perform the following:

- Coordinate issuing Notices to Airmen (NOTAM) with the Owner and Engineer for the construction activities and closures as applicable per phase and/or work area at least 72 hours in advance of the work.
- Place barricades as indicated on the construction safety and phasing plan drawing as applicable per phase and work area.

At the conclusion of construction operations, the Contractor shall perform the following:

- Remove barricades as indicated on the construction safety and phasing plan drawings.

- Clean all paved surfaces.
- Restore all disturbed turf areas with sod.
- Coordinate cancellation of the NOTAMs with the Owner and Engineer.

Phase I

Work Area: During work in this area, the Contractor shall coordinate with the Owner and ATCT staff to ensure that access in and out of the site and the tower are unrestricted throughout the construction.

At the start of work, the Contractor shall perform the following:

- Install barricades, signage, and MOT measures as needed based on the scope of work being completed.

- NOTAM to be coordinated with ATCT and Owner 72 hours prior to the start of work.

Work Area is limited to one hundred twenty (120) consecutive calendar days to reach substantial completion, and an additional thirty (30) calendar days to reach final completion.

3.3 AREAS AND OPERATIONS AFFECTED BY THE CONSTRUCTION ACTIVITY.

Contractor, subcontractor, and supplier employees or any other unauthorized persons shall be restricted from entering an active airport operating area without previous permission from the Owner and the Air Traffic Control Tower.

In an emergency, the Owner or other designated airport representative may order the Contractor to suspend operations; move personnel, equipment, and materials to a safe location; and stand by until aircraft use is completed.

The Contractor shall cooperate with the airport users through the Engineer, in coordination with airport operations, in scheduling the operations to provide adequate clearance for safe aircraft parking, fueling, maintenance, loading or unloading, maneuvering, taxing operations, or other aircraft operations.

a. **Identification of Affected Areas:** The following is a summary of impacts to the Airport Operations Areas resulting from the proposed construction and work phasing.

Table 3.3A Construction Effect on Airport Operations		
Project	**Taxilane Reconstruction**	
Phase	Phase I - Work Areas A, B, C, D and E. (See Section 3.2 for description)	
Operational Requirements	**Normal (Existing)**	**Anticipated (During Construction)**
Scope of Work	The full scope of work for this project will be completed without Runway Impacts.	
RW 11 Average Aircraft Operations	Carrier: N/A | GA: 130/Day | Military: 2/Day	Carrier: N/A | GA: 130/Day | Military: 2/Day
RW 29 Average Aircraft Operations	Carrier: N/A | GA: 130/Day | Military: 2/Day	Carrier: N/A | GA: 130/Day | Military: 2/Day
Runway 11-29 ARC	C-III	C-III
RW 11 Approach Visibility Mins.	1 ¼ mile	1 ¼ mile
RW 29 Approach Visibility Mins	1 ¼ mile	1 ¼ mile
Runway 11 Declared Distances	TORA: 5,500 ft	TORA: 5,500 ft
	TODA: 5,500 ft	TODA: 5,500 ft
	ASDA: 5,500 ft	ASDA: 5,500 ft
	LDA: 5,500 ft	LDA: 5,500 ft
Runway 29 Declared Distances	TORA: 5,500 ft	TORA: 5,500 ft
	TODA: 5,500 ft	TODA: 5,500 ft
	ASDA: 5,500 ft	ASDA: 5,500 ft
	LDA: 5,500 ft	LDA: 5,500 ft
RW 06 Average Aircraft Operations	Carrier: N/A | GA: 130/Day | Military: 2/Day	Carrier: N/A | GA: 130/Day | Military: 2/Day
RW 24 Average Aircraft Operations	Carrier: N/A | GA: 130/Day | Military: 2/Day	Carrier: N/A | GA: 130/Day | Military: 2/Day
Runway 06-24 ARC	C-II	C-II
RW 06 Approach Visibility Mins	1 mile	1 mile
RW 24 Approach Visibility Mins	1 mile	1 mile
Runway 06 Declared Distances	TORA: 5,000 ft	TORA: 5,000 ft
	TODA: 5,000 ft	TODA: 5,000 ft
	ASDA: 5,000 ft	ASDA: 5,000 ft
	LDA: 5,000 ft	LDA: 5,000 ft
Runway 24 Declared Distances	TORA: 5,000 ft	TORA: 5,000 ft
	TODA: 5,000 ft	TODA: 5,000 ft
	ASDA: 5,000 ft	ASDA: 5,000 ft
	LDA: 5,000 ft	LDA: 5,000 ft
Taxiway A ADG	II	II
Taxiway A1 ADG	II	II
Taxiway B ADG	II	II
Taxiway C ADG	II	II
Taxiway D ADG	II	II
Taxiway E ADG	II	II
Taxiway F ADG	II	II
Taxiway G ADG	II	II
Taxiway H ADG	II	II
ATCT (hours open)	07:00 - 21:00 (local)	07:00 – 21:00 (local)
ARFF Index	N/A	N/A
Special Conditions	N/A	N/A

b. Mitigation of effects.

This CSPP has established specific requirements and operational procedures necessary to maintain the safety and efficiency of airport operations during the construction of this project.

All coordination pertaining to airport operations during construction will go through the Owner's Representative and the Airport Director. Any required NOTAM's to be issued will be sent through the Owner's Representative and issued by Owner or the ATCT.

i. Temporary Changes to runway and/or taxiway operations:
Any affected Airport Operations Areas identified in the previous section for reduced access or identified as being closed entirely to aircraft traffic, will be barricaded by the use of low profile, lighted barricades placed as shown Construction Safety and Phasing Plan Drawings. In addition, required NOTAM's shall be issued on the various temporary changes to aircraft access through the affected areas.

ii. Detours for Flagler County Fire Department (FCFD) and other airport vehicles:
The project work site shall remain open to all FCFD vehicles in emergency situations. The contractor is required to maintain access in and around the project work area for all FCFD vehicles. Proper routing of this traffic will be effectively communicated to all supervisory personnel involved in the construction project.

iii. Maintenance of essential utilities:
Special attention shall be given to preventing unscheduled interruption of utility services and facilities. It is the Contractor's responsibility to have the locations of cabling and other underground utilities marked prior to beginning excavation. Any locations provided by the Owner are approximate locations and the Contractor shall verify all locations prior to beginning excavations. When an underground cable or utility is damaged due to the Contractor's negligence the Contractor shall immediately repair the affected cable or utility at his/her own expense. Full coordination between airport staff, field inspectors, and construction personnel will be exercised to ensure that all airport power and control cables are fully protected prior to any excavation.

iv. Temporary Changes to air traffic control procedures:
Changes to air traffic control procedures have been coordinated with the airport and ATO. Any additional requests for changes must be made to the Owner, through the Engineer, in writing. These requested changes will be reviewed by the Engineer, Owner and ATO. If these changes are acceptable to all the aforementioned parties, the Engineer will request a modification to the CSPP previously submitted to the FAA. The Contractor shall plan on a minimum 60 days for this process to be completed. No deviation to the original CSPP shall be made without final FAA approval.

3.4 PROTECTION OF NAVIGATIONAL AIDS (NAVAIDS).

Before commencing construction activity, parking vehicles, or storing construction equipment and materials near a NAVAID, coordination with the appropriate FAA ATO to evaluate the effects of construction activity and the required distances and direction from the NAVAID is required.

Runway 11-29 and Runway 6-24 NAVAIDs (PAPIs and REILs) will remain in service, without exception.

Individuals responsible for coordinating when each shutdown occurs and when each facility will be out of service are the Contractor, Owner, and Engineer.

Protection of NAVAIDS will be in accordance with sections 3.2 Coordination, 3.10 Notification of

Construction Activities, 3.12 Underground Utilities, and 3.15 Runway and Taxiway Visual Aids of this document.

3.5 CONTRACTOR ACCESS.

This section of the CSPP details the areas to which the contractor must have access, and how contractor personnel will access the project work area.

a. Location of stockpiled construction materials.

The Contractor shall store material and equipment and schedule his operations for work to be done so that no unauthorized interference to normal Airport operations will result. Construction operations shall not be conducted in a manner to cause interference with Airport Operations.

Stockpiled materials and equipment storage are not permitted within the Runway Safety Area/ Taxiway Safety Area (RSA/TSA), Obstacle Free Zone (OFZ) or Object Free Area (OFA) of an operational runway or taxiway. Stockpiled construction materials must be located inside the contractor staging areas as shown on the Construction Safety and Phasing Plan Drawings (Appendix 1) unless otherwise approved by the Engineer.

Stockpiled material shall be constrained in a manner to prevent movement resulting from either aircraft jet blast or wind conditions in excess of ten miles per hour. In addition, stockpiled material shall have silt fence located around the material to prevent Foreign Object Debris (FOD) from moving onto the airfield pavements or polluting watercourses. Stockpiled material may not exceed 25 feet in height.

Open trenches exceeding 3 inches in depth and 5 inches in width or stockpiled material are not permitted within the limits of safety areas of operational runways or taxiways. Stockpiled material shall not be permitted within the protected areas of the runways or allowed to penetrate any of the protected airspace.

Spoil and Disposal Areas: Spoil shall be disposed of offsite by the contractor unless otherwise shown or specified. No direct payment will be made for spoiling and disposal operations. The cost of spoiling material on site, or of spoiling material off-site, shall be considered incidental to this Contract and the costs shall be included in the various pay items involved.

Location of stockpiled construction materials shall be in accordance with sections 3.6 Wildlife Management, 3.7 Foreign Object Debris (FOD) and 3.17 Hazard Marking and Lighting of this document.

b. Vehicle and pedestrian operations. Vehicle and pedestrian access routes for airport construction projects must be controlled to prevent inadvertent or unauthorized entry of persons, vehicles, or animals onto the Air Operations Area (AOA).

The airport Owner will coordinate requirements for vehicle operations with the affected airport tenants. Specific vehicle and pedestrian requirements for this project are as follows:

All construction vehicles and personnel shall be restricted to the immediate work areas specified by the contract for this project. These areas include the haul routes into the work area, the designated contractor staging area and any other required area under construction. Use of alternate haul routes or staging areas by the contractor shall not be permitted without prior notification and approval by the Owner's Representative.

i. Construction Site Parking:

The Contractor's personal vehicle parking area shall be outside of the airport security fence as shown on the Construction Safety and Phasing Plan drawings (Appendix 1).

A staging area, as indicated on the Contract Drawings, will be provided where the Contractor may set up a field office and store equipment and materials. The Contractor shall make his own arrangements for and bear all costs of required utilities. The Contractor shall use and maintain the site in accordance with requirements of the Owner. Upon completion of work, the Contractor's staging area shall be removed, and the area cleaned and restored to original or better condition.

ii. Construction Equipment Parking:

The Contractor's equipment storage area shall be in the contractor staging area as shown on the Construction Safety and Phasing Plan drawings (Appendix 1). The Contractor's equipment and construction vehicles shall be restricted to the construction site or storage areas during construction and parked in the equipment storage area during non-working periods. Maximum allowable equipment height in the staging area shall be 25 feet. Maximum allowable equipment height in the work areas shall be 25 feet. Maximum allowable equipment height at the borrow area shall be 25 feet (if applicable).

Contractor must service all construction vehicles within the limits of the project work area or the Contractor's Staging Area. Parked construction vehicles must be outside the OFA and never in the safety area of an active runway or taxiway. Inactive equipment must not be parked on closed taxiways or runways. If it is necessary to leave specialized equipment on a closed taxiway or runway at night, the equipment must be well lighted. Employees shall also park construction vehicles outside the OFA when not in use by construction personnel (for example, overnight, on weekends, or during other periods when construction is not active). Parking areas must not obstruct the clear line of sight by the ATCT, as applicable, to any taxiways or runways under air traffic control nor obstruct any runway visual aids, signs, or navigation aids.

iii. Access and Haul Roads:

The Contractor shall clear, construct and maintain haul routes as required for the execution of the work. The haul routes and access points shall only be in the locations approved by the Engineer and the Owner or as shown on the Construction Safety and Phasing Plan drawings (Appendix 1).

Access or haul routes used by contractor vehicles must be clearly marked to prevent inadvertent entry to areas open to airport operations. Construction traffic must remain on the designated haul routes, never straying from the approved paths. The Contractor shall fully describe the appropriate access routes to all his/her employees, subcontractors and material delivery personnel.

The Contractor shall be responsible for maintaining existing haul routes. At the completion of the project, these areas shall be returned to their original lines and grades and shall be restored to a condition equal to or better than original. Additionally, all contractor installed access roads shall be turned over to the Airport and remain in place. All non-paved areas that are disturbed by Contractor's haul roads, staging area, etc., located outside of the seeding/sodding limits shown on the plans shall be re-seeded/re-sodded and restored to their original or better condition by the Contractor at no additional cost to the Owner.

The Contractor shall control and coordinate the material (supplies) that are hauled to and from work area. Delivery of equipment and materials to the area of work shall be by way of the access route shown on the Construction Safety and Phasing Plan drawings (Appendix 1) or designated by the Owner or Engineer.

The Contractor shall maintain all haul routes and work areas in a dust free condition at all times.

The Contractor shall control dust from the construction operations by vacuum type sweeping, watering or other methods as approved by the Engineer. Contractor shall have equipment (in operating condition) on site, at all times, to control dust. If the Contractor fails to comply with this requirement, construction will be suspended until a plan for controlling the dust is approved by

the Engineer. Landside haul routes, boulevards and drives shall be kept clean by use of a vacuum sweeper on a daily basis as required.

Application of water on dirt or gravel haul routes must be provided as often as necessary. Haul roads in any airport traffic areas must be especially monitored for dust and debris to prevent any potential Foreign Object Debris (FOD) situations.

The existing perimeter roads and access roads shall remain open and accessible for airport personnel at all times. Special attention must be given to ensure that if construction traffic is to share or cross any FCFD routes, that fire department vehicles right of way is not impeded at any time, and that construction traffic on haul roads do not interfere with NAVAIDs or approach surfaces of operational runways.

Portions of the project area(s) shall be bounded by the low-profile barricades identifying Contractor personnel and vehicle area operation limits. The locations of any barricaded project limits, haul routes, Contractor Staging Areas, and associated safety and security details are also provided graphically in the attached exhibits.

iv. Marking and Lighting of Vehicles:

When any vehicle or piece of equipment, other than one that has prior approval from the Owner, must operate on an airport, it shall be escorted and properly identified.

The Contractor shall limit access within the airport security fence to authorized vehicles. All authorized vehicles shall have a vehicle dashboard placard permit issued by the Owner or an identification sign on both sides of the vehicle containing the Contractor's company name. Private vehicles of the Contractor's personnel must be parked outside the airport security fence and will not be allowed within the airport security fence at any time.

All vehicles operating on the airport and in the general vicinity of the safety area or in aircraft movement areas must be marked with flashing yellow/amber beacons or orange and white flags during daylight hours. During hours of darkness or low visibility they shall be marked with at least flashing yellow/amber beacons.

Beacons and flags must be maintained to standards and in good working and operational condition. Beacons must be located on the uppermost part of the vehicle structure, visible from any direction, and flash 75 +/- 15 flashes per minute. Flags shall be 3' by 3' with alternating 1' by 1' international orange and white squares and shall be replaced by the contractor if they become faded, discolored, or ragged as determined by Airport Operations or the Owner's Representative.

v. Description of Proper Vehicle Operations:

The Contractor shall be required to follow guidance on the additional identification and control of construction equipment per the Airport's Security Plan. No Contractor vehicle or pedestrian crossing of active runways or taxiways will be allowed at any time during the work of this Contract, unless otherwise specified. No deviation from the pedestrian and vehicle routes to and from the Project Areas will be allowed unless specific permission has been granted by the Owner.

The ground movement of aircraft shall have the right-of-way at all times, and the Contractor's vehicles and equipment shall yield to aircraft at all times.

vi. Required Escorts:

Escorts are not required.

All construction-related activity taking place within any airport defined movement area requires radio communication with the FAA control tower or UNICOM unless prior approval is obtained from Airport Operations. Spotters and/or flaggers having radio or telephone contact with the Airport or Tower may be used with the approval of the Engineer.

At no time shall active taxiways or taxi lanes be crossed by construction equipment without notification and proper approval/clearance from radio-trained gate guards or Airport Operations.

vii. Training Requirements for Vehicle Drivers:

The Flagler Executive Airport does not require badging or driver training. It is the responsibility of the Contractor to ensure that all employees that are permitted to drive on the airfield have the correct training and competency to operate a vehicle on an active airfield and communicate with the ATCT personnel as

needed. The Owner, Engineer, and ATCT personnel reserve the right to ban any and all personnel or employees from driving on the airfield, with or without cause.

viii. Situational Awareness:

Aircraft traffic will continue to use existing runways, aprons, and taxiways of the Airport during the time that work under a contract is being performed. The Contractor shall, at all time, conduct the work as to create no hindrance, hazard, or obstacle to aircraft using the Airport. Vehicle drivers must confirm by personnel observation that no aircraft is approaching their position (either in the air or on the ground) when given clearance to cross a runway, taxiway, or any other area open to airport operations.

ix. Two-way Radio Communication Procedures:

Two-way radio communications are required between Contractors and the Airport Traffic Control Tower. Vehicular traffic located in or crossing an active movement area shall have a working two-way radio and/or be directed by a flag person in radio contact with the Airport Traffic Control Tower. Prior to proceeding into the active movement area, all drivers shall confirm through personal observation that no aircraft is approaching the vehicle position. Construction personnel may operate in movement areas without two-way radio communication provided a NOTAM is issued closing the area, and provided that the area is properly marked to prevent incursions.

The Contractor shall comply with proper radio usage, including read back requirements and proper phraseology including the International Phonetic Alphabet. Failure to abide by these requirements may result in revoked driving privileges.

x. Maintenance of the Secured Area of the Airport.

Owner and Contractor must also maintain a high level of security during construction when access points are created in the security fencing to permit construction vehicle access. Temporary gates shall be equipped and/or manned by construction personnel to prevent unauthorized access by vehicles, animals or people. Procedures conforming to Airport security protocols should be in place to ensure that only authorized persons and vehicles have access to the AOA and to prohibit “piggybacking” behind another person or vehicle. Access shall be made available at all times to all airport emergency vehicles traveling to operations areas within the proximity of the construction work zone.

c. Security.

In general, security in the construction area is the responsibility of the Contractor.

The Contractor shall be responsible for maintaining security at all access gates used during the project and will be held liable by the Owner for any breach of security. No gate shall be left open. Owner and contractors must take care to maintain security during construction when access points are created in the security fencing to permit the passage of construction vehicles or personnel. Temporary gates shall be equipped so they can be securely closed and locked to prevent access by animals and unauthorized people. Procedures should be in place to ensure that only authorized persons and vehicles have access to the AOA and to prohibit “piggybacking” behind another person or vehicle.

The Contractor shall be required to maintain security and comply with the Transportation Security Administration Security Rules and Regulations throughout the duration of the project. The Contractor and the Surety shall indemnify and save harmless the Owner, Engineer and third party or political subdivision from any and all breaches of security and shall indemnify the Owner for any fines, expenses and damages which it may be obliged to pay by reason of any breach of security resulting from the Contractor's actions at any time during the prosecution of the work. Such breaches of security are subject to fines by the Transportation Security Administration of up to ten thousand dollars ($10,000) per incident.

3.6 WILDLIFE MANAGEMENT.

Construction contractors must carefully control and continuously remove waste or loose materials that might attract wildlife. Contractor personnel must be aware of and avoid construction activities that can create wildlife hazards on airports.

a. **Trash.** Food scraps from construction personnel activity must be collected and disposed of at a proper facility.

b. **Standing water.** Water shall not be allowed to collect and pool for more than any single 24-hour period. Temporary grading may be required to promote drainage during daily operations as well as between work phases.

c. **Tall grass and seeds.** The use of millet seed in turfing and seeding operations shall not be permitted.

d. **Poorly maintained fencing and gates.** The Contractor shall maintain a constant secure perimeter to the airfield, including continuous security perimeter fencing and gates (if applicable).

e. **Disruption of existing wildlife habitat.** Gopher Tortoises are known to be on-site and in the vicinity of the project area. Provisions have been made in the Contract to allow the Contractor time to conduct a survey of the site to locate and identify existing gopher tortoise burrows within and around the active work areas. If impacts to existing burrows or habitat cannot be avoided, the Contractor shall be required to apply for and obtain the proper permits and approvals to relocate the tortoises either on site or off site as needed. Protection, removal, and relocation of Gopher Tortoises is the sole responsibility of the Contractor. Failure to protect endangered species on Airport Property will result in fines and penalties from the authorities having jurisdiction over the work. The Owner and Engineer shall not be held liable for failures to identify and protect existing burrows or tortoises.

Contractor shall take immediate remedial action to remove wildlife attractants should any occurrence be noted. Contractor shall immediately report to the Engineer and Owner should any wildlife congregation be noted, and in particular if mammals enter the airport through the construction gate.

3.7 FOREIGN OBJECT DEBRIS (FOD) MANAGEMENT.

Special care and measures shall be taken to prevent Foreign Object Debris (FOD) damage when working in an airport environment. Waste and loose materials, commonly referred to as FOD, are capable of causing damage to aircraft landing gears, propellers, and jet engines. The Contractor shall be responsible for implementing an approved FOD Management Plan prior to the start of construction activities. The FOD Management Plan will have procedures for prevention, regular cleanup, and containment of construction material and debris. FOD control and monitoring methods shall be in accordance with AC 150/5370-2 (*Operational Safety on Airports during Construction "latest edition"*). The Contractor will ensure all vehicles related to the construction project using paved surfaces in the AOA shall be free of any debris that could create a FOD hazard. Special attention will be given to the cleaning of cracks and pavement joints. All taxiways, aprons, and runways must remain clean. Waste containers with attached lids shall be required on construction sites.

Special attention should be given to securing lightweight construction material (concrete insulating blankets, tarps, insulation, etc.). Specific securing procedures and/or chain-link enclosures may be required.

Contractors will provide their own equipment for vehicle and equipment washing and clean up.

Immediate access to a power sweeper is required when construction occurs on any pavement area inside the AOA, unless an appropriate alternative has been approved by the Owner's Representative and Air Traffic Control Manager.

3.8 HAZARDOUS MATERIALS (HAZMAT) MANAGEMENT.

Contractors operating construction vehicles and equipment on the airport must be prepared to expeditiously contain and clean-up spills resulting from fuel, hydraulic fluid, or other chemical fluid leaks. Transport and handling of other hazardous materials on an airport also require special procedures. To that end, the Contractor is required to develop a spill prevention plan and response procedures for vehicle operations prior to the start of construction activities. This includes maintenance of appropriate Material Safety Data Sheets (MSDS) and appropriate prevention and response equipment on-site.

Fueling Procedures and Spill Recovery Procedures shall be in accordance with Florida Fire Prevention Code, latest edition, and the National Fire Protection Association standard procedures for spill response, latest edition. If fueling is to take place in the staging area, it must be away from catch basins. Contractor must have spill containment kits on site.

In the event of a fuel spill or the spill of other hazardous materials, the Contractor shall immediately notify the Owner and the Engineer, the St. Johns River Water Management District, and the Environmental Protection Agency.

Contractor shall abide by the specific requirements contained in the Technical Specifications of this contract.

3.9 NOTIFICATION OF CONSTRUCTION ACTIVITY.

The following is information and procedures for immediate notification of airport users and the FAA of any conditions adversely affecting the operational safety of the airport.

a. **Maintenance of a list of Responsible Representatives/ Point of contact.** A list of responsible representatives and points of contact shall be created by the Engineer, the Airport and the Contractor prior to the start of construction. This list shall be compiled as part of the project pre-construction meeting agenda. Procedures will be established to contact all parties, including after regular work hours. Updates will be made to the list throughout the project duration by the Engineer. Contractor points of contact shall be incorporated into the contractor's SPCD.

b. **Notices to Airman (NOTAM).** Only the Owner may initiate or cancel NOTAMs on airport conditions and is the only entity that can close or open a runway or taxiway. The Owner must coordinate the issuance, maintenance, and cancellation of NOTAMs about airport conditions resulting from construction activities with tenants and the local air traffic facility (control tower, approach control, or air traffic control center), and must provide information on closed or hazardous conditions on airport movement areas to the FAA Flight Service Station (FSS) so it can issue a NOTAM. The Owner must file and maintain a list of authorized representatives with the FSS. Only the FAA may issue or cancel NOTAMs on shutdown or irregular operation of FAA owned facilities. Any person having reason to believe that a NOTAM is missing, incomplete, or inaccurate must notify the Owner. See Section 3.14 regarding issuing NOTAMs for partially closed runways versus runways with displaced thresholds.

Any NOTAMs for planned airfield closures for this project must be coordinated through the airport director and the airports duly appointed construction management representative. Reference Section 3.2 for planned closures for this project, which require issuance of a NOTAM.

c. **Emergency Notification Procedures.** In the event of an aircraft emergency, severe weather conditions, or any issue as determined by the Airport that may affect aircraft operations, the Contractor's personnel and/or equipment may be required to immediately vacate the area(s) affected. Points of contact for the various parties involved with the project shall be identified and shared at the pre-construction meeting among the various parties. Emergency points of contact shall be incorporated into the contractor's SPCD.

d. **Accidents**. The Contractor shall provide at the site such equipment and medical facilities as are necessary to supply first aid service to anyone who may be injured in connection with the work. The Contractor must promptly report in writing to the Engineer all accidents whatsoever arising out of, or in connection with, the performance for the work, whether on or adjacent to the site which caused death, personal injury or property damages, giving full details and statements of witnesses. In addition, if death or serious injuries or serious damages are caused, the accident shall be reported immediately by telephone or messenger to both the Engineer and the Owner.

If any claim is made by anyone against the Contractor or any Subcontractor on account of any accident, the Contractor shall promptly report the facts in writing to the Engineer giving full details of the claims.

e. **Coordination with FCFD Personnel.** The contractor shall coordinate, through the duly appointed airport representative with FCFD personnel, mutual aid providers and other emergency services if construction requires the following:

- The deactivation and subsequent reactivation of water lines or fire hydrants, or
- The re-routing, blocking and restoration of emergency access routes, or
- The use of hazardous materials on the airfield.

Procedures and methods for addressing any planned or emergency response actions on the airfield concerning this project shall be established and implemented prior to the start of construction.

f. **Notification to the FAA.**

i. **Part 77.** Any person proposing construction or alteration of objects that affect navigable airspace, as defined in Part 77, must notify the FAA. This includes construction equipment and proposed parking areas for this equipment (i.e. cranes, graders, other equipment) on airports. FAA Form 7460- 1, Notice of Proposed Construction or Alteration is used for this purpose and submitted to the appropriated FAA Airports Regional or District Office. A 7460-1 form for this project has been completed and submitted by the Airport Owner/Engineer for using equipment with a maximum height of **25 feet**. A new 7460-1 form must be submitted to the FAA for review and comment for any equipment which the Contractor will use which is taller than the equipment used in the above

7460- 1 submission. The Engineer will be responsible for submitting the new 7460-1 form to the FAA. To that end, the Contractor shall identify the equipment, including the maximum height it will extended to during construction, the area(s) in which the equipment will be used, and the duration the equipment will be used

ii. **Part 157.** With some exceptions, Title 14CFR Part 157, Notice of Construction, Alteration, Activation, and Deactivation of Airports, requires that the Owner notify the FAA in writing whenever a non-Federally funded project involves the construction of a new airport; the construction, realigning, altering, activating, or abandoning of a runway, landing strip, or associated taxiway; or the deactivation or abandoning of an entire airport. Notification involves submitting FAA Form 7480-1, Notice of Landing Area Proposal, to the nearest FAA Airports Regional or District Office.

iii. **NAVAIDS.** For emergency (short notice) notification about impacts to both airport-owned and FAA-owned NAVAIDs, contact: 866-432-2622.

1. Airport owned/FAA maintained. If construction operations require a shutdown of more than 24 hours, or more than 4 hours daily on consecutive days, of a NAVAID owned by the airport but maintained by the FAA, provide a 45-day minimum notice to FAA ATO/Technical Operations prior to facility shutdown.

FAA owned. The Owner must notify the appropriate FAA ATO Service Area Planning and Requirements (P&R) Group a minimum of 45 days prior to implementing an event that causes impacts to NAVAIDs. (Impacts to FAA equipment covered by a Reimbursable Agreement (RA) do not have to be reported by the Owner). Coordinate work for an FAA owned NAVAID shutdown with the local FAA ATO/Technical Operations office, through the Engineer, including any necessary reimbursable agreements and flight checks. Detail procedures that address unanticipated utility outages and cable cuts that could impact FAA NAVAIDs. In addition, provide seven days' notice to schedule the actual shutdown.

3.10 INSPECTION REQUIREMENTS.

a. **Daily (or more frequent) inspections.** Inspections shall be conducted by the Contractor at least daily, but more frequently, if necessary, to ensure conformance with the CSPP. A sample checklist is provided in Appendix 2 of this document. In addition to Contractor's required inspections, Owner may inspect the construction site three (3) times a day to ensure compliance with the CSPP. The Owner's Representative will have full-time inspectors monitoring activity throughout construction. Promptly take all actions necessary to prevent or remedy any unsafe or potentially unsafe conditions as soon as they are discovered.

b. **Inspecting Areas re-opened to aircraft traffic**. Prior to re-opening any areas to air traffic, the contractor shall ensure all work is complete and equipment and materials have been vacated from the area. All work areas shall be thoroughly cleaned, swept, and checked for FOD. Once completed, the Owner/Engineer shall review, inspect and approve all areas for re-opening to air traffic.

c. **Final inspections.** A final inspection with the Owner's Representative, Airport and Contractor will take place prior to allowing airport operations.

3.11 UNDERGROUND UTILITIES.

Special attention shall be given to preventing unscheduled interruption of utility services and facilities. The Contractor shall locate and/or arrange for the location of all the underground cables. When an underground cable is damaged due to the Contractor's negligence the Contractor shall immediately repair the cable affected at his/her own expense. Full coordination between airport staff, field inspectors, and construction personnel will be exercised to ensure that all airport power and control cables are fully protected prior to

any excavation. Locations of cabling will be marked prior to beginning excavation.

Prior to opening an excavation, effort shall be made to determine whether underground installation: i.e., sewer, water, fuel, electric lines, etc., will be encountered, and if so, where such underground installations are located. When the excavation approaches the approximate locations of such an installation, the exact locations shall be determined by careful hand probing or hand digging, and/or use of a vacuum truck, and when it is uncovered, adequate protection shall be provided for the existing installation. All known owners of underground facilities in the area concerned shall be advised of proposed work at least 48 hours prior to the start of actual excavation.

The information concerning underground utilities was compiled from information and sketches furnished by or obtained from utility companies and the Airport. The Owner and the Engineer do not guarantee their accuracy. The Contractor is advised to determine the exact locations from the available sources of information or provide his own means of detection. The only case in which the Engineer will consider redesign or relocation of a proposed facility in the project is when an existing utility is located within the construction limits. In this case, the Engineer will work with the Owner to determine the appropriate action to resolve the conflict. If such relocation is impossible, the Engineer will consider re- design or relocation of the proposed facilities. In both cases, Contractor shall be responsible for all underground utilities and shall not be separately compensated for delays or extra cost.

Note that Sunshine 811 services do not include locating FAA and Owner facilities. However, the Contractor is still responsible for locating and protecting all existing utilities within and adjacent to the work areas and staging areas. Damage to existing utilities shall be repaired at the Contractor's expense and the repairs shall be completed in accordance with AHJ requirements.

Contact information for all utility owners will be provided for each company/agency.

3.12 PENALTIES.

Failure on the part of the contractor to adhere to prescribed requirements may have consequences that jeopardize the health, safety or lives of customers and employees at the airport. The Airport may issue warnings on the first offense based upon the circumstances of the incident. Individuals involved in non-compliance violations may be required to surrender their Airport Badges and/or be prohibited from working at the airport, pending an investigation of the matter.

Penalties for violations related to airport safety and security procedures will be established by the Airport.

Note: project shutdown or misdemeanor citations may be issued on a first offense. When construction operations are suspended, activity shall not resume until all deficiencies are rectified.

3.13 SPECIAL CONDITIONS.

In the event of an aircraft emergency, the Contractor's personnel and/or equipment may be required to immediately vacate the area. The Contractor will receive notification from airport operations when special conditions require the construction site to be vacated. In any event, extreme care should be exercised should construction personnel identify any FCFD or other emergency or rescue vehicle moving toward the Runway with emergency lights displayed. This will generally mean that an emergency situation is imminent.

Special conditions that could require suspension of the construction work include the following: aircraft in distress, aircraft accident, security breach, VIP operation, vehicle/pedestrian deviation, severe weather, or failing to abide by this Construction Safety and Phasing Plan and/or the Construction Safety and Phasing Plan drawings.

3.14 RUNWAY AND TAXIWAY VISUAL AIDS.

This topic includes marking, lighting, signs, and visual NAVAIDs. Those areas where aircraft will be operating shall be clearly and visibly separated from construction areas, including closed runways. Throughout the duration of the construction project, the Contractor shall inspect and verify that these areas remain clearly marked and visible at all times and that marking, lighting, signs and visual NAVAIDs remain in place and operational.

a. General. Airport markings, lighting, signs, and visual NAVAIDs must be clearly visible to pilots, not misleading, confusing, or deceptive. All must be secured in place to prevent movement by prop wash, jet blast, wing vortices, or other wind currents and constructed of materials that would minimize damage to an aircraft in the event of inadvertent contact.

Marking and lighting for a temporary threshold is not required.

Barricades, flagging, and flashers are required at the locations and times described in the subsection titled 3.2 Phasing shall be supplied by the Contractor. All Lighted Closed Runway Markers shall be provided by the Contractor and maintained by the Contractor for the duration of this project.

b. Markings. Markings must be in compliance with the standards of AC 150/5340-1, Standards for Airport Markings, current edition, and the drawings and technical specifications of this project.

c. Lighting and visual NAVAIDs. All taxiway edge lights in those sections of taxiways closed to aircraft traffic will be either de-energized or blacked out by use of an appropriately cut length of PVC pipe.

d. Signs. Signs must be in conformance with AC 150/5345-44, Specification for Runway and Taxiway Signs and AC 150/5340-18, Standard for Airport Sign Systems, current edition. Airfield signage will be installed and/or replaced/retrofitted along impacted taxiways and taxi lanes.

e. Maintenance of Airport Lighting. All existing airfield lighting circuits shall be maintained in full operation throughout the period of this Contract. Where disconnections are required, such work shall be scheduled at such times and in such a manner as approved by the Owner. The Contractor is required to allow the full use of airfield lighting circuits in open movement areas during night operations and during periods of low visibility. The Contractor shall provide such temporary lights and cables as required to maintain full use of existing airfield lighting circuits. Temporary above ground lighting cables, if approved, shall be delineated with stakes and flagging at the direction of the Engineer.

All circuits in the vicinity of the work area shall be tested prior to, during and after construction. The Contractor shall furnish all necessary equipment and appliances for testing the airport electrical systems and underground cable circuits as specified below. The Contractor shall perform all tests in the presence of the Engineer. The Contractor shall demonstrate the electrical characteristics to the satisfaction of the Engineer. All costs for testing are incidental and shall be at the sole expense of the Contractor. For phased projects, the tests must be completed by phase and results meeting the specifications below must be maintained by the Contractor throughout the entire project as well as during the ensuing warranty period.

Earth resistance testing methods shall be submitted to the Engineer for approval. Earth resistance testing results shall be recorded on an approved form and testing shall be performed in the presence of the Engineer. All such testing shall be at the sole expense of the Contractor.

Should the counterpoise or ground grid conductors be damaged or suspected of being damaged by construction activities the Contractor shall test the conductors for continuity with a low resistance ohmmeter. If damaged by the Contractor's activities, the Contractor shall be required to repair/replace at their own cost. The conductors shall be isolated such that no parallel path exists and tested for continuity. The Engineer shall approve of the test method selected. All such testing shall be at the sole expense of the Contractor.

The test equipment for insulation resistance shall be an insulation resistance tester (1,000V megger) with a digital readout. The instrument shall provide a 500-volt test for insulation resistance with a meter range of 0 to 500 megohms. The Contractor shall test, demonstrate and record to the satisfaction of the Engineer the following:

a. Test Requirements Prior to Construction.

(1) Test all circuits within the work area for continuity and insulation resistance to ground, at the electrical building, in the presence of the Engineer and the Owner.

(2) Provide a copy of the test results to the Engineer and the Owner.

(3) Check that all circuits are properly connected in accordance with applicable wiring diagrams.

b. Test Requirements During Construction. Circuit testing during construction shall be as directed and witnessed by the Engineer when the Contractor is working on existing circuitry or excavating adjacent to or near existing circuitry. Circuit testing during construction will not be required during the times when the Contractor's operations do not affect existing airfield lighting circuitry. It is the intent of this section to ensure that airfield lighting circuitry remains operational throughout the duration of the Contract.

(1) Test all circuits within the work area for continuity and insulation resistance to ground at the electrical building, prior to energizing any circuit.

(2) Insure that all circuits within the work area are operational, prior to the Contractor leaving the project at the end of the workday. Specific times for circuit checks will be determined by the Engineer relative to the Contractor's work hours each day.

(3) Segment test new non-grounded series circuits during installation. Length of cable segment tested shall not have more than five (5) splices, light units and/or electrical equipment between the ends being tested. Insulation resistance to ground shall be not less than 500 megohms.

(4) Ensure that the insulation resistance to ground of each segment of new non-grounded conductors of multiple conductor circuits is not less than 500 megaohms.

(5) That the impedance to ground of each ground rod does not exceed 25 ohms prior to establishing connections to other ground electrodes or equipment. The fall-of-potential ground impedance test shall be utilized, as described by ANSI/IEEE Standard 81, to verify this requirement. Ground rods testing higher than 25 ohms shall have a minimum extension of ten (10) feet of ground rod added, driven to the proper elevation and re-tested. Extensions shall be attached by exothermic methods and re-testing performed until the tests show 25 ohms resistance or less. Tests shall not be performed within 72 hours after a rainstorm has ended or when standing water is present around the ground rod.

(6) Ensure that all circuits are properly connected in accordance with applicable wiring diagrams.

(7) The Contractor shall test all circuits within the work area for continuity after backfilling cable trenches. The reading shall be logged and provided to the Engineer prior to payment of cable items.

(8) Provide a copy of all test results to Engineer and Owner on a daily basis.

c. Test Requirements at the Completion of the Project. The Contractor shall test and demonstrate to the satisfaction of the Engineer the following:

(1) Test all circuits within the work area for continuity and insulation resistance to ground, at the

electrical building, in the presence of the Engineer and the Owner.

(2) That all original lighting power and control circuits are continuous and insulation resistance to ground is not lower than before construction.

(3) That all affected lighting power and control circuits (existing and new) are continuous and free from short circuits. That all affected circuits (existing and new) are free from unspecified grounds.

(4) That all affected circuits (existing and new) are free from unspecified grounds.

(5) That the insulation resistance to ground of all new non-grounded series circuits or cable segments is not less than 50 megohms.

(6) That the insulation resistance to ground of all non-grounded conductors of new multiple circuits or circuit segments is not less than 50 megohms.

(7) That all affected circuits (existing and new) are properly connected in accordance with applicable wiring diagrams.

(8) That all affected circuits (existing and new) are operable. Tests shall be conducted that include operating each control not less than 10 times and the continuous operation of each lighting and power circuit for not less than 1/2 hour.

The Contractor shall be responsible for maintaining an insulation resistance of 50 megohms minimum, with isolation transformers connected, in new circuits and new segments of existing circuits through the end of the contract warranty period.

Two copies of tabulated results of all cable tests performed shall be supplied by the Contractor to the Engineer. Where connecting new cable to existing cable, ground resistance tests shall be performed on the new cable prior to connection to the existing circuit.

3.15 MARKING AND SIGNS FOR ACCESS ROUTES.

Location of haul routes on the airport site shall be as specified in the project drawing set and as provided graphically in the attached exhibits, reference Appendix 1. It shall be the Contractor's responsibility to coordinate off-site haul routes with the appropriate owner who has jurisdiction over the affected route. The haul routes, to the extent possible, shall be marked and signed in accordance with FAA airfield signage requirements, the Federal Highway Administration Manual on Uniform Traffic Control Devices (MUTCD) and/or state highway specifications, as applicable.

3.16 HAZARD MARKING AND LIGHTING.

a. Purpose. Hazard marking and lighting prevents pilots from entering areas closed to aircraft and prevents construction personnel from entering areas open to aircraft. To that end, comprehensible warning indicators for any area affected by construction that is normally accessible to aircraft, personnel, or vehicles shall be installed and maintained by the Contractor for the duration of construction operations.

b. Equipment. Low Profile Barricades of the type detailed in the project drawings with red omnidirectional flashing lights shall be placed outside the safety area of intersecting taxiways at the edge of the closed airfield surfaces and the project work limits. All Low-Profile Barricades placed throughout the project shall be interlocked. Layout locations for this equipment are as shown on the Construction Safety and Phasing Plan drawings and attached exhibits, reference Appendix 1.

Plastic Drum Type Barricades of the type detailed in the project drawings with omnidirectional flashing lights shall be placed. Layout locations for this equipment are as shown on the Construction Safety and Phasing Plan drawings and attached exhibits, reference Appendix 1.

The Contractor shall have a person on call 24 hours a day for emergency maintenance of airport hazard lighting and barricades. The Contractor must file the contact person's information with the Owner. Lighting should be checked for proper operation at least once per day, preferably at dusk.

3.17 WORK ZONE LIGHTING FOR NIGHTTIME CONSTRUCTION.

Prior to starting any night work, a temporary lighting plan shall be submitted by the Contractor to the Engineer for review and approval. Night work shall only be permitted if approved by the Engineer and the Owner. Any proposed night work is required to have any and all necessary lighting equipment to adequately illuminate the indicated work area. Construction lighting should be positioned to cast the most natural color illumination and contrast with a minimum of shadows. Any construction lighting and light towers used during nighttime construction must be removed from the construction site when the area is reopened to aircraft operations. It is the contractor's responsibility to provide the necessary lighting required to finish any proposed night work. No additional compensation or claims shall be made to execute night work. Additionally, this project is intended to be constructed in "1 shift per day" not to exceed 12 hours, without approval from the Engineer. Should the Contractor desire to perform night work, the RPR/Engineer/Inspector shall be permitted time to adjust schedules. No work shall be allowed for 24 hours prior to the start of night work, and no work shall be permitted 24 hours after the completion of night work to allow time for on site staff to adjust sleep schedules. No additional time shall be granted to the Contractor for these stoppages. The Contractor shall be required to factor these time limitations in to their schedule of work.

3.18 PROTECTION OF AIRFIELD AREAS.

Safety area encroachments, improper ground vehicle operations and unmarked or uncovered holes and trenches in the vicinity of aircraft operation surfaces and construction areas are the three most recurring threats to safety during construction. Protection of runway and taxiway safety areas, object free areas, obstacle free zones, and approach/departure surfaces shall be a standing requirement for the duration of construction operations.

a. Runway Safety Area (RSA). A runway safety area is the defined surface surrounding the runway prepared or suitable for reducing the risk of damage to airplanes in the event of an undershoot, overshoot, or excursion from the runway by aircraft.

Runway	Aircraft Design Group	RSA Distance from Centerline		RSA Width	RSA Length from End of Runway
		RSA	Holdline		
11-29	III	250 ft.	250 ft.	500 ft.	1,000 ft. Overrun 600 ft. Undershoot
6-24	II	200 ft.	250 ft.	400 ft.	1,000 ft. Overrun 600 ft. Undershoot

No construction may occur within the existing RSA while the runway is open. Any construction between RSA and Hold line must be approved by the Airport prior to starting work.

The airport owner must coordinate any adjustment of RSA dimensions, to meet the above requirement, with the appropriate FAA Airports Regional or District Office and the local FAA air traffic manager and issue a NOTAM.

Open trenches or excavations are not permitted within the RSA while the runway is open. The Contractor must backfill trenches before the runway is opened. Coverings are not allowed in runway safety areas.
There shall be no stockpiled materials or equipment stored within the limits of the RSA.
After the Runway has been closed, Contractors must prominently mark open trenches and excavations at the construction site with red or orange flags, as approved by the Owner, and light them with red lights during hours of restricted visibility or darkness.

Soil erosion must be controlled to maintain RSA standards, that is, the RSA must be cleared and graded and have no potentially hazardous ruts, humps, depressions, or other surface variations, and capable, under dry conditions, of supporting snow removal equipment, aircraft rescue and firefighting equipment, and the occasional passage of aircraft without causing structural damage to the aircraft.

b. Runway Object Free Area (ROFA). Construction, including excavations, may be permitted in the ROFA. However, equipment must be removed from the ROFA when not in use, and material should not be stockpiled in the ROFA if not necessary. Stockpiling material in the OFA requires submittal of a 7460-1 form and justification provided to the appropriate FAA Airports Regional or District Office for approval.

Runway	Aircraft Design Group	ROFA Distance from Centerline	ROFA Width	ROFA Length from End of
11-29	II	400 ft.	800 ft.	1,000 ft. Overrun 600 ft. Undershoot
6-24	II	400 ft.	800 ft.	1,000 ft. Overrun 600 ft. Undershoot

c. Taxiway Safety Area (TSA). The taxiway safety area is a defined surface alongside the taxiway prepared or suitable for reducing the risk of damage to an airplane unintentionally departing the taxiway. No construction may occur within the TSA while the taxiway is open for aircraft operations.

Taxiway	Aircraft Design Group	TSA Distance from Centerline	TSA Width
All	II	39.5 ft.	79 ft.

Open trenches or excavations are not permitted within the TSA while the taxiway is open. The Contractor must backfill trenches before the taxiway is opened. Coverings are not allowed in taxiway safety areas.

The airport owner must coordinate any adjustment of TSA dimensions, to meet the above requirement, with the appropriate FAA Airports Regional or District Office and the local FAA air traffic manager and issue a NOTAM.

After the Taxiway has been closed, Contractors must prominently mark open trenches and excavations at the construction site with red or orange flags, as approved by the Owner, and light them with red lights during hours of restricted visibility or darkness.

Soil erosion must be controlled to maintain TSA standards, that is, the TSA must be cleared and graded and have no potentially hazardous ruts, humps, depressions, or other surface variations, and capable, under dry conditions, of supporting snow removal equipment, aircraft rescue and firefighting equipment, and the occasional passage of aircraft without causing structural damage to the aircraft.

d. Taxiway Object Free Area (TOFA). Unlike the Runway Object Free Area, aircraft wings regularly penetrate the taxiway/taxilane object free area during normal operations. Thus, the restrictions are more stringent. No construction equipment may be parked within the TOFA while the taxiway/taxilane is open for aircraft operations.

Construction activity may be accomplished without adjusting the width of the taxiway object free area, subject to the following restrictions:

(i) Appropriate NOTAMs are issued.

(ii) Marking and lighting meeting the provisions above are implemented.

(iii) Five-foot clearance is maintained between equipment and materials and any part of an aircraft (includes wingtip overhang). In these situations, flaggers must be used to direct construction equipment, and wing walkers will be necessary to guide aircraft. Wing walkers should be

airline/aviation personnel rather than construction workers. If such clearance can only be maintained if an aircraft does not have full use of the entire taxiway width (with its main landing gear at the edge of the pavement), then it will be necessary to move personnel and equipment for the passage of that aircraft.

Taxiway	Aircraft Design Group	TOFA Distance from Centerline	TOFA Width
All	II	65.5 ft.	131 ft.

Taxilane	Aircraft Design Group	TLOFA Distance from Centerline	TLOFA Width
All	II	57.5 ft.	115 ft.

a. Obstacle Free Zone (OFZ). Construction personnel, material, and/or equipment may not penetrate the OFZ while the runway is open for aircraft operations. The OFZ is a defined volume of airspace centered about and above the runway centerline.

b. Runway approach/departure surfaces. All personnel, materials, and/or equipment must remain clear of the applicable threshold siting surfaces. Objects that do not penetrate these surfaces may still be obstructions to air navigation and may affect standard instrument approach procedures. Coordinate with the FAA through the appropriate FAA Airports Regional or District Office.

Construction activity in a runway approach/departure area may result in the need to partially close a runway or displace the existing runway threshold. Partial runway closure, displacement of the runway threshold, as well as closure of the complete runway and other portions of the movement area also require coordination through the Owner with the appropriate FAA air traffic manager (FSS if non-towered) and ATO/Technical Operations (for affected NAVAIDS) and airport users.

Runway End	Aircraft Approach Category	Airplane Design Group	Minimum Safety Area Behind Threshold	Minimum Unobstructed Approach Slope
11	C	II	200 ft.	34:1 to threshold
29	C	II	200 ft.	34:1 to threshold
6	C	II	200 ft.	34:1 to threshold
24	C	II	200 ft.	34:1 to threshold

3.19 OTHER LIMITATIONS ON CONSTRUCTION.

A. Prohibitions. The following prohibitions are in effect for the duration of this project:

1. No use of tall equipment (cranes, concrete pumps, and so on) unless a 7460-1 determination letter is issued for such equipment.
2. No use of open flame welding or torches unless fire safety precautions are provided, and the Owner has approved their use.
3. No use of electrical blasting caps or explosives of any kind on or within 1,000 ft (300 m) of the airport property.
4. No use of flare pots within the AOA.

B. Restrictions.

i. Construction suspension required during specific airport operations – Not Applicable

ii. Areas that cannot be worked on simultaneously –Work areas shall be completed in accordance to Section 3.2.b – Construction Work Phasing Requirements.

iii. Day or night construction restrictions – Night work shall not be allowed unless approved by the Engineer/Owner. Equipment for nighttime lighting of construction areas shall be sufficient to adequately illuminate the work area in order to ensure quality construction. The lights shall be positioned to provide the most natural color illumination and contrast with a minimum of shadows. Lighting pavements from both sides is considered preferable as lighting from only one side can result in objectionable shadows. Light towers shall be positioned and adjusted to aim away from ATCT cabs, active runways, and active taxiways to prevent blinding effects. The Contractor shall prepare a plan showing the locations, heights and aiming points of light towers for review by the Owner, Engineer and ATCT personnel. The final location and aiming of light towers shall be determined by trial, therefore, the Contractor must be aware that several attempts at locations and aiming angles may be necessary before the light towers can be operational. Light towers shall be removed from the construction site prior to opening the pavement to aircraft operations.

It is recommended that all equipment, except haul trucks, be equipped with artificial illumination to safely illuminate the area immediately surrounding their location.

Unless provided for elsewhere, the cost of nighttime lighting of construction areas shall be considered a subsidiary and incidental part of construction and as such, the Contractor shall include all costs associated with nighttime lighting of construction areas in the various pay items of work involved.

Where work on this Contract is not scheduled for night work and the Contractor requests and receives permission to work at night, there will be no additional compensation allowed for the extra costs associated with night work.

iv. Seasonal Construction Restrictions – Not Applicable

APPENDIX 1

CONSTRUCTION SAFETY AND PHASING PLAN DRAWINGS (CONSTRUCTION SAFETY AND PHASING PLANS GC101-GC501)

SECTION 90 MEASUREMENT AND PAYMENT

90-01 MEASUREMENT OF QUANTITIES. All work completed under the contract will be measured by the RPR, or their authorized representatives, using United States Customary Units of Measurement.

The method of measurement and computations to be used in determination of quantities of material furnished and of work performed under the contract will be those methods generally recognized as conforming to good engineering practice.

Unless otherwise specified, longitudinal measurements for area computations will be made horizontally, and no deductions will be made for individual fixtures (or leave-outs) having an area of 9 square feet (0.8 square meters) or less. Unless otherwise specified, transverse measurements for area computations will be the neat dimensions shown on the plans or ordered in writing by the RPR.

Unless otherwise specified, all contract items which are measured by the linear foot such as electrical ducts, conduits, pipe culverts, underdrains, and similar items shall be measured parallel to the base or foundation upon which such items are placed.

The term “lump sum” when used as an item of payment will mean complete payment for the work described in the contract. When a complete structure or structural unit (in effect, “lump sum” work) is specified as the unit of measurement, the unit will be construed to include all necessary fittings and accessories.

When requested by the Contractor and approved by the RPR in writing, material specified to be measured by the cubic yard (cubic meter) may be weighed, and such weights will be converted to cubic yards (cubic meters) for payment purposes. Factors for conversion from weight measurement to volume measurement will be determined by the RPR and shall be agreed to by the Contractor before such method of measurement of pay quantities is used.

Measurement and Payment Terms

Term	Description
Excavation and Embankment Volume	In computing volumes of excavation, the average end area method will be used unless otherwise specified.
Measurement and Proportion by Weight	The term “ton” will mean the short ton consisting of 2,000 pounds (907 km) avoirdupois. All materials that are measured or proportioned by weights shall be weighed on accurate, independently certified scales by competent, qualified personnel at locations designated by the RPR. If material is shipped by rail, the car weight may be accepted provided that only the actual weight of material is paid for. However, car weights will not be acceptable for material to be passed through mixing plants. Trucks used to haul material being paid for by weight shall be weighed empty

Term	Description
	daily at such times as the RPR directs, and each truck shall bear a plainly legible identification mark.
Measurement by Volume	Materials to be measured by volume in the hauling vehicle shall be hauled in approved vehicles and measured therein at the point of delivery. Vehicles for this purpose may be of any size or type acceptable for the materials hauled, provided that the body is of such shape that the actual contents may be readily and accurately determined. All vehicles shall be loaded to at least their water level capacity, and all loads shall be leveled when the vehicles arrive at the point of delivery.
Asphalt Material	Asphalt materials will be measured by the gallon (liter) or ton (kg). When measured by volume, such volumes will be measured at 60°F (16°C) or will be corrected to the volume at 60°F (16°C) using ASTM D1250 for asphalts. Net certified scale weights or weights based on certified volumes in the case of rail shipments will be used as a basis of measurement, subject to correction when asphalt material has been lost from the car or the distributor, wasted, or otherwise not incorporated in the work. When asphalt materials are shipped by truck or transport, net certified weights by volume, subject to correction for loss or foaming, will be used for computing quantities.
Cement	Cement will be measured by the ton (kg) or hundredweight (km).
Structure	Structures will be measured according to neat lines shown on the plans or as altered to fit field conditions.
Timber	Timber will be measured by the thousand feet board measure (MFBM) actually incorporated in the structure. Measurement will be based on nominal widths and thicknesses and the extreme length of each piece.
Plates and Sheets	The thickness of plates and galvanized sheet used in the manufacture of corrugated metal pipe, metal plate pipe culverts and arches, and metal cribbing will be specified and measured in decimal fraction of inch.
Miscellaneous Items	When standard manufactured items are specified such as fence, wire, plates, rolled shapes, pipe conduit, etc., and these items are identified by gauge, unit weight, section dimensions, etc., such identification will be considered to be nominal weights or dimensions. Unless more stringently controlled by tolerances in cited specifications, manufacturing tolerances established by the industries involved will be accepted.
Scales	Scales must be tested for accuracy and serviced before use. Scales for weighing materials which are required to be proportioned or measured and paid for by weight shall be furnished, erected, and maintained by the Contractor, or be certified permanently installed commercial scales. Platform scales shall be installed and maintained with the platform level and rigid bulkheads at each end.

Term	Description
	Scales shall be accurate within 0.5% of the correct weight throughout the range of use. The Contractor shall have the scales checked under the observation of the RPR before beginning work and at such other times as requested. The intervals shall be uniform in spacing throughout the graduated or marked length of the beam or dial and shall not exceed 0.1% of the nominal rated capacity of the scale, but not less than one pound (454 grams). The use of spring balances will not be permitted. In the event inspection reveals the scales have been “overweighing” (indicating more than correct weight) they will be immediately adjusted. All materials received subsequent to the last previous correct weighting-accuracy test will be reduced by the percentage of error in excess of 0.5%. In the event inspection reveals the scales have been under-weighing (indicating less than correct weight), they shall be immediately adjusted. No additional payment to the Contractor will be allowed for materials previously weighed and recorded. Beams, dials, platforms, and other scale equipment shall be so arranged that the operator and the RPR can safely and conveniently view them. Scale installations shall have available ten standard 50-pound (2.3 km) weights for testing the weighing equipment or suitable weights and devices for other approved equipment. All costs in connection with furnishing, installing, certifying, testing, and maintaining scales; for furnishing check weights and scale house; and for all other items specified in this subsection, for the weighing of materials for proportioning or payment, shall be included in the unit contract prices for the various items of the project.
Rental Equipment	Rental of equipment will be measured by time in hours of actual working time and necessary traveling time of the equipment within the limits of the work. Special equipment ordered in connection with extra work will be measured as agreed in the change order or supplemental agreement authorizing such work as provided in paragraph 90-05 *Payment for Extra Work*.
Pay Quantities	When the estimated quantities for a specific portion of the work are designated as the pay quantities in the contract, they shall be the final quantities for which payment for such specific portion of the work will be made, unless the dimensions of said portions of the work shown on the plans are revised by the RPR. If revised dimensions result in an increase or decrease in the quantities of such work, the final quantities for payment will be revised in the amount represented by the authorized changes in the dimensions.

90-02 SCOPE OF PAYMENT. The Contractor shall receive and accept compensation provided for in the contract as full payment for furnishing all materials, for performing all work under the

contract in a complete and acceptable manner, and for all risk, loss, damage, or expense of whatever character arising out of the nature of the work or the execution thereof, subject to the provisions of Section 70, paragraph 70-18, *No Waiver of Legal Rights*.

When the “basis of payment” subsection of a technical specification requires that the contract price (price bid) include compensation for certain work or material essential to the item, this same work or material will not also be measured for payment under any other contract item which may appear elsewhere in the contract, plans, or specifications.

90-03 COMPENSATION FOR ALTERED QUANTITIES. When the accepted quantities of work vary from the quantities in the proposal, the Contractor shall accept as payment in full, so far as contract items are concerned, payment at the original contract price for the accepted quantities of work actually completed and accepted. No allowance, except as provided for in Section 40, paragraph 40-02, *Alteration of Work and Quantities,* will be made for any increased expense, loss of expected reimbursement, or loss of anticipated profits suffered or claimed by the Contractor which results directly from such alterations or indirectly from their own unbalanced allocation of overhead and profit among the contract items, or from any other cause.

90-04 PAYMENT FOR OMITTED ITEMS. As specified in Section 40, paragraph 40-03, *Omitted Items,* the RPR shall have the right to omit from the work (order nonperformance) any contract item, except major contract items, in the best interest of the Owner.

Should the RPR omit or order nonperformance of a contract item or portion of such item from the work, the Contractor shall accept payment in full at the contract prices for any work actually completed and acceptable prior to the RPR’s order to omit or non-perform such contract item.

Acceptable materials ordered by the Contractor or delivered on the work prior to the date of the RPR’s order will be paid for at the actual cost to the Contractor and shall thereupon become the property of the Owner.

In addition to the reimbursement hereinbefore provided, the Contractor shall be reimbursed for all actual costs incurred for the purpose of performing the omitted contract item prior to the date of the RPR’s order. Such additional costs incurred by the Contractor must be directly related to the deleted contract item and shall be supported by certified statements by the Contractor as to the nature the amount of such costs.

90-05 PAYMENT FOR EXTRA WORK. Extra work, performed in accordance with Section 40, paragraph 40-04, *Extra Work*, will be paid for at the contract prices or agreed prices specified in the change order or supplemental agreement authorizing the extra work.

90-06 PARTIAL PAYMENTS. Partial payments will be made to the Contractor at least once each month as the work progresses. Said payments will be based upon estimates, prepared by the RPR, of the value of the work performed and materials complete and in place, in accordance with the contract, plans, and specifications. Such partial payments may also include the delivered actual cost of those materials stockpiled and stored in accordance with paragraph 90-07, *Payment for Materials on Hand*. No partial payment will be made when the amount due to the Contractor since the last estimate amounts to less than five hundred dollars.

From the total of the amount determined to be payable on a partial payment, five **(5) percent** of such total amount will be deducted and retained by the Owner for protection of the Owner’s

interests. Unless otherwise instructed by the Owner, the amount retained by the Owner will be in effect until the final payment is made except as follows:

a. Contractor may request release of retainage on work that has been partially accepted by the Owner in accordance with Section 50-14. Contractor must provide a certified invoice to the RPR that supports the value of retainage held by the Owner for partially accepted work.

b. In lieu of retainage, the Contractor may exercise at its option the establishment of an escrow account per paragraph 90-08.

The Contractor is required to pay all subcontractors for satisfactory performance of their contracts no later than 30 days after the Contractor has received a partial payment. Contractor must provide the Owner evidence of prompt and full payment of retainage held by the prime Contractor to the subcontractor within 30 days after the subcontractor's work is satisfactorily completed. A subcontractor's work is satisfactorily completed when all the tasks called for in the subcontract have been accomplished and documented as required by the Owner. When the Owner has made an incremental acceptance of a portion of prime contract, the work of a subcontractor covered by the acceptance is deemed to be satisfactorily completed.

When at least 95% of the work has been completed to the satisfaction of the RPR, the RPR shall, at the Owner's discretion and with the consent of the surety, prepare estimates of both the contract value and the cost of the remaining work to be done. The Owner may retain an amount not less than twice the contract value or estimated cost, whichever is greater, of the work remaining to be done. The remainder, less all previous payments and deductions, will then be certified for payment to the Contractor.

It is understood and agreed that the Contractor shall not be entitled to demand or receive partial payment based on quantities of work in excess of those provided in the proposal or covered by approved change orders or supplemental agreements, except when such excess quantities have been determined by the RPR to be a part of the final quantity for the item of work in question.

No partial payment shall bind the Owner to the acceptance of any materials or work in place as to quality or quantity. All partial payments are subject to correction at the time of final payment as provided in paragraph 90-09, *Acceptance and Final Payment*.

The Contractor shall deliver to the Owner a complete release of all claims for labor and material arising out of this contract before the final payment is made. If any subcontractor or supplier fails to furnish such a release in full, the Contractor may furnish a bond or other collateral satisfactory to the Owner to indemnify the Owner against any potential lien or other such claim. The bond or collateral shall include all costs, expenses, and attorney fees the Owner may be compelled to pay in discharging any such lien or claim.

90-07 PAYMENT FOR MATERIALS ON HAND. Partial payments may be made to the extent of the delivered cost of materials to be incorporated in the work, provided that such materials meet the requirements of the contract, plans, and specifications and are delivered to acceptable sites on the airport property or at other sites in the vicinity that are acceptable to the Owner. Such delivered costs of stored or stockpiled materials may be included in the next partial payment after the following conditions are met:

a. The material has been stored or stockpiled in a manner acceptable to the RPR at or on an approved site.

b. The Contractor has furnished the RPR with acceptable evidence of the quantity and quality of such stored or stockpiled materials.

c. The Contractor has furnished the RPR with satisfactory evidence that the material and transportation costs have been paid.

d. The Contractor has furnished the Owner legal title (free of liens or encumbrances of any kind) to the material stored or stockpiled.

e. The Contractor has furnished the Owner evidence that the material stored or stockpiled is insured against loss by damage to or disappearance of such materials at any time prior to use in the work.

It is understood and agreed that the transfer of title and the Owner's payment for such stored or stockpiled materials shall in no way relieve the Contractor of their responsibility for furnishing and placing such materials in accordance with the requirements of the contract, plans, and specifications.

In no case will the amount of partial payments for materials on hand exceed the contract price for such materials or the contract price for the contract item in which the material is intended to be used.

No partial payment will be made for stored or stockpiled living or perishable plant materials.

The Contractor shall bear all costs associated with the partial payment of stored or stockpiled materials in accordance with the provisions of this paragraph.

90-08 PAYMENT OF WITHHELD FUNDS. At the Contractor's option, if an Owner withholds retainage in accordance with the methods described in paragraph 90-06 *Partial Payments*, the Contractor may request that the Owner deposit the retainage into an escrow account. The Owner's deposit of retainage into an escrow account is subject to the following conditions:

a. The Contractor shall bear all expenses of establishing and maintaining an escrow account and escrow agreement acceptable to the Owner.

b. The Contractor shall deposit to and maintain in such escrow only those securities or bank certificates of deposit as are acceptable to the Owner and having a value not less than the retainage that would otherwise be withheld from partial payment.

c. The Contractor shall enter into an escrow agreement satisfactory to the Owner.

d. The Contractor shall obtain the written consent of the surety to such agreement.

90-09 ACCEPTANCE AND FINAL PAYMENT. When the contract work has been accepted in accordance with the requirements of Section 50, paragraph 50-15, *Final Acceptance*, the RPR will prepare the final estimate of the items of work actually performed. The Contractor shall approve the RPR's final estimate or advise the RPR of the Contractor's objections to the final

estimate which are based on disputes in measurements or computations of the final quantities to be paid under the contract as amended by change order or supplemental agreement. The Contractor and the RPR shall resolve all disputes (if any) in the measurement and computation of final quantities to be paid within 30 calendar days of the Contractor's receipt of the RPR's final estimate. If, after such 30-day period, a dispute still exists, the Contractor may approve the RPR's estimate under protest of the quantities in dispute, and such disputed quantities shall be considered by the Owner as a claim in accordance with Section 50, paragraph 50-16, *Claims for Adjustment and Disputes*.

After the Contractor has approved, or approved under protest, the RPR's final estimate, and after the RPR's receipt of the project closeout documentation required in paragraph 90-11, *Contractor Final Project Documentation*, final payment will be processed based on the entire sum, or the undisputed sum in case of approval under protest, determined to be due the Contractor less all previous payments and all amounts to be deducted under the provisions of the contract. All prior partial estimates and payments shall be subject to correction in the final estimate and payment.

If the Contractor has filed a claim for additional compensation under the provisions of Section 50, paragraph 50-16, *Claims for Adjustments and Disputes,* or under the provisions of this paragraph, such claims will be considered by the Owner in accordance with local laws or ordinances. Upon final adjudication of such claims, any additional payment determined to be due the Contractor will be paid pursuant to a supplemental final estimate.

90-10 CONSTRUCTION WARRANTY.

a. In addition to any other warranties in this contract, the Contractor warrants that work performed under this contract conforms to the contract requirements and is free of any defect in equipment, material, workmanship, or design furnished, or performed by the Contractor or any subcontractor or supplier at any tier.

b. This warranty shall continue for a period of one year from the date of final acceptance of the work, except as noted. If the Owner takes possession of any part of the work before final acceptance, this warranty shall continue for a period of one year from the date the Owner takes possession.

c. The Contractor shall remedy at the Contractor's expense any failure to conform, or any defect. In addition, the Contractor shall remedy at the Contractor's expense any damage to Owner real or personal property, when that damage is the result of the Contractor's failure to conform to contract requirements; or any defect of equipment, material, workmanship, or design furnished by the Contractor.

d. The Contractor shall restore any work damaged in fulfilling the terms and conditions of this clause. The Contractor's warranty with respect to work repaired or replaced will run for one year from the date of repair or replacement.

e. The Owner will notify the Contractor, in writing, within seven (7) days after the discovery of any failure, defect, or damage.

f. If the Contractor fails to remedy any failure, defect, or damage within 14 days after receipt of notice, the Owner shall have the right to replace, repair, or otherwise remedy the failure, defect, or damage at the Contractor's expense.

g. With respect to all warranties, express or implied, from subcontractors, manufacturers, or suppliers for work performed and materials furnished under this contract, the Contractor shall: (1) Obtain all warranties that would be given in normal commercial practice; (2) Require all warranties to be executed, in writing, for the benefit of the Owner, as directed by the Owner, and (3) Enforce all warranties for the benefit of the Owner.

h. This warranty shall not limit the Owner's rights with respect to latent defects, gross mistakes, or fraud.

90-11 CONTRACTOR FINAL PROJECT DOCUMENTATION. Approval of final payment to the Contractor is contingent upon completion and submittal of the items listed below. The final payment will not be approved until the RPR approves the Contractor's final submittal. The Contractor shall:

a. Provide two (2) copies of all manufacturers warranties specified for materials, equipment, and installations.

b. Provide weekly payroll records (not previously received) from the general Contractor and all subcontractors.

c. Complete final cleanup in accordance with Section 40, paragraph 40-08, *Final Cleanup*.

d. Complete all punch list items identified during the Final Inspection.

e. Provide complete release of all claims for labor and material arising out of the Contract.

f. Provide a certified statement signed by the subcontractors, indicating actual amounts paid to the Disadvantaged Business Enterprise (DBE) subcontractors and/or suppliers associated with the project.

g. When applicable per state requirements, return copies of sales tax completion forms.

h. Manufacturer's certifications for all items incorporated in the work.

i. All required record drawings, as-built drawings or as-constructed drawings.

j. Project Operation and Maintenance (O&M) Manual(s).

k. Security for Construction Warranty.

l. Equipment commissioning documentation submitted, if required.

m. Contractor's Affidavit of Payment of Debts and Claims (AIA Document G706) from the Prime Contractor.

n. Additional closeout documentation as requested by the Engineer.

END OF SECTION 90

FAA Airports

Contract Provision Guidelines for Obligated Sponsors and Airport Improvement Program Projects (Issued on March 17, 2026)

Contents

Appendix A – CONTRACT PROVISIONS 2

A1 ACCESS TO RECORDS AND REPORTS 2
A2 BREACH OF CONTRACT TERMS 3
A3 BUY AMERICAN PREFERENCE 4
A4 CIVIL RIGHTS - GENERAL 11
A5 CIVIL RIGHTS – TITLE VI ASSURANCE 12
A6 CLEAN AIR AND WATER POLLUTION CONTROL 15
A7 CONTRACT WORKHOURS AND SAFETY STANDARDS ACT REQUIREMENTS 16
A8 COPELAND "ANTI-KICKBACK" ACT 17
A9 DAVIS-BACON REQUIREMENTS 18
A10 DEBARMENT AND SUSPENSION 24
A11 DISADVANTAGED BUSINESS ENTERPRISE 25
A12 DISTRACTED DRIVING 26
A13 PROHIBITION ON CERTAIN TELECOMMUNICATIONS AND VIDEO SURVEILLANCE SERVICES OR EQUIPMENT 27
A14 FEDERAL FAIR LABOR STANDARDS ACT (FEDERAL MINIMUM WAGE) 28
A15 LOBBYING AND INFLUENCING FEDERAL EMPLOYEES 29
A16 OCCUPATIONAL SAFETY AND HEALTH ACT OF 1970 30
A17 PROCUREMENT OF RECOVERED MATERIALS 31
A18 TAX DELINQUENCY AND FELONY CONVICTIONS 32
A19 TERMINATION OF CONTRACT 33
A20 TRADE RESTRICTION CERTIFICATION 34
A21 VETERAN'S PREFERENCE 36
A22 DOMESTIC PREFERENCES FOR PROCUREMENTS 37
A23 PROHIBITION OF COVERED UNMANNED AIRCRAFT SYSTEMS (UAS) 38

APPENDIX A – CONTRACT PROVISIONS

A1 ACCESS TO RECORDS AND REPORTS

ACCESS TO RECORDS AND REPORTS

The Contractor must maintain an acceptable cost accounting system. The Contractor agrees to provide the Owner, the Federal Aviation Administration and the Comptroller General of the United States or any of their duly authorized representatives access to any books, documents, papers and records of the Contractor which are directly pertinent to the specific contract for the purpose of making audit, examination, excerpts and transcriptions. The Contractor agrees to maintain all books, records and reports required under this contract for a period of not less than three years after final payment is made and all pending matters are closed.

A2 BREACH OF CONTRACT TERMS

BREACH OF CONTRACT TERMS

Any violation or breach of terms of this contract on the part of the CONTRACTOR or its subcontractors may result in the suspension or termination of this contract or such other action that may be necessary to enforce the rights of the parties of this agreement.

Owner will provide CONTRACTOR written notice that describes the nature of the breach and corrective actions the CONTRACTOR must undertake in order to avoid termination of the contract. Owner reserves the right to withhold payments to Contractor until such time the Contractor corrects the breach or the Owner elects to terminate the contract. The Owner's notice will identify a specific date by which the CONTRACTOR must correct the breach. Owner may proceed with termination of the contract if the CONTRACTOR fails to correct the breach by the deadline indicated in the Owner's notice.

The duties and obligations imposed by the Contract Documents and the rights and remedies available thereunder are in addition to, and not a limitation of, any duties, obligations, rights and remedies otherwise imposed or available by law.

A3 BUY AMERICAN PREFERENCE

A3.1.1 Certification of Compliance with FAA Buy American Preference Statement

FAA BUY AMERICAN PREFERENCE

The Contractor certifies that its bid/offer is in compliance with 49 U.S.C. § 50101, BABA and other related Made in America Laws,[1] U.S. statutes, guidance, and FAA policies, which provide that Federal funds may not be obligated unless all iron, steel and manufactured goods used in AIP funded projects are produced in the United States, unless the Federal Aviation Administration has issued a waiver for the product; the product is listed as an Excepted Article, Material Or Supply in Federal Acquisition Regulation subpart 25.108; or is included in the FAA Nationwide Buy American Waivers Issued list.

The bidder or offeror must complete and submit the certification of compliance with FAA's Buy American Preference, BABA and Made in America laws included herein with their bid or offer. The Airport Sponsor/Owner will reject as nonresponsive any bid or offer that does not include a completed certification of compliance with FAA's Buy American Preference and BABA.

The bidder or offeror certifies that all constructions materials, defined to mean an article, material, or supply other than an item of primarily iron or steel; a manufactured product; cement and cementitious materials; aggregates such as stone, sand, or gravel; or aggregate binding agents or additives that are or consist primarily of: non-ferrous metals; plastic and polymer-based products (including polyvinylchloride, composite building materials, and polymers used in fiber optic cables); glass (including optic glass); lumber; or drywall used in the project are manufactured in the U.S.

The bidder or offeror certifies procurement of certain rolling stock using FAA grant funds will prohibit airports from using Federal financial assistance to procure buses or rail car vehicle rolling stock from covered entities.

[1] Per Executive Order 14005 "Made in America Laws" means all statutes, regulations, rules, and Executive Orders relating to federal financial assistance awards or federal procurement, including those that refer to "Buy America" or "Buy American," that require, or provide a preference for, the purchase or acquisition of goods, products, or materials produced in the United States, including iron, steel, and manufactured products offered in the United States.

A3.1.2 Certification of Compliance with FAA Buy American Preference – Construction Projects

As a matter of bid responsiveness, the bidder or offeror must complete, sign, date, and submit this certification statement with its proposal. The bidder or offeror must indicate how it intends to comply with 49 U.S.C. § 50101, BABA and other related Made in America Laws, U.S. statutes, guidance, and FAA policies, by selecting one of the following certification statements. These statements are mutually exclusive. Bidder must select one or the other (i.e., not both) by inserting a checkmark (ü) or the letter "X".

☐ Bidder or offeror hereby certifies that it will comply with 49 U.S.C. § 50101, BABA and other related U.S. statutes, guidance, and policies of the FAA by:

a) Only installing iron, steel and manufactured products produced in the United States;

b) Only installing construction materials defined as: an article, material, or supply – other than an item of primarily iron or steel; a manufactured product; cement and cementitious materials; aggregates such as stone, sand, or gravel; or aggregate binding agents or additives that are or consist primarily of non-ferrous metals; plastic and polymer-based products (including polyvinylchloride, composite building materials, and polymers used in fiber optic cables); glass (including optic glass); lumber or drywall that have been manufactured in the United States.

c) Installing manufactured products for which the Federal Aviation Administration (FAA) has issued a waiver as indicated by inclusion on the current FAA Nationwide Buy American Waivers Issued listing; or

d) Installing products listed as an Excepted Article, Material or Supply in Federal Acquisition Regulation Subpart 25.108.

By selecting this certification statement, the bidder or offeror agrees:

a) To provide to the Airport Sponsor or the FAA evidence that documents the source and origin of the iron, steel, and/or manufactured product.
b) To faithfully comply with providing U.S. domestic products.
c) To refrain from seeking a waiver request after establishment of the contract, unless extenuating circumstances emerge that the FAA determines justified.
d) Certify that all construction materials used in the project are manufactured in the U.S.

☐ The bidder or offeror hereby certifies it cannot comply with the 100 percent Buy American Preferences of 49 U.S.C. § 50101(a) but may qualify for a Type 3 or Type 4 waiver under 49 USC § 50101(b). By selecting this certification statement, the apparent bidder or offeror with the apparent low bid agrees:

a) To the submit to the Airport Sponsor or FAA within 15 calendar days of being selected as the responsive bidder, a formal waiver request and required documentation that supports the type of waiver being requested.

b) That failure to submit the required documentation within the specified timeframe is cause for a non-responsive determination that may result in rejection of the proposal.
c) To faithfully comply with providing U.S. domestic products at or above the approved U.S. domestic content percentage as approved by the FAA.
d) To furnish U.S. domestic product for any waiver request that the FAA rejects.
e) To refrain from seeking a waiver request after establishment of the contract, unless extenuating circumstances emerge that the FAA determines justified.

Required Documentation

Type 2 Waiver (Nonavailability) - The iron, steel, manufactured goods or construction materials or manufactured goods are not available in sufficient quantity or quality in the United States. The required documentation for the Nonavailability waiver is

a) Completed Content Percentage Worksheet and Final Assembly Questionnaire
b) Record of thorough market research, consideration where appropriate of qualifying alternate items, products, or materials including;
c) A description of the market research activities and methods used to identify domestically manufactured items capable of satisfying the requirement, including the timing of the research and conclusions reached on the availability of sources.

Type 3 Waiver – The cost of components and subcomponents produced in the United States is more than 60 percent of the cost of all components and subcomponents of the "facility/project." The required documentation for a Type 3 waiver is:

a) Completed Content Percentage Worksheet and Final Assembly Questionnaire including;
b) Listing of all manufactured products that are not comprised of 100 percent U.S. domestic content (excludes products listed on the FAA Nationwide Buy American Waivers Issued listing and products excluded by Federal Acquisition Regulation Subpart 25.108; products of unknown origin must be considered as non-domestic products in their entirety).
c) Cost of non-domestic components and subcomponents, excluding labor costs associated with final assembly and installation at project location.
d) Percentage of non-domestic component and subcomponent cost as compared to total "facility" component and subcomponent costs, excluding labor costs associated with final assembly and installation at project location.

Type 4 Waiver (Unreasonable Costs) - Applying this provision for iron, steel, manufactured goods or construction materials would increase the cost of the overall project by more than 25 percent. The required documentation for this waiver is:

a) A completed Content Percentage Worksheet and Final Assembly Questionnaire from
b) At minimum two comparable equal bids and/or offers;
c) Receipt or record that demonstrates that supplier scouting called for in Executive Order 14005, indicates that no domestic source exists for the project and/or component;
d) Completed waiver applications for each comparable bid and/or offer.

False Statements: Per 49 USC § 47126, this certification concerns a matter within the jurisdiction of the Federal Aviation Administration and the making of a false, fictitious, or fraudulent certification may render the maker subject to prosecution under Title 18, United States Code.

Date	Signature
Company Name	Title

A3.1.3 Certification of Compliance with FAA Buy American Preference – Equipment/Building Projects

As a matter of bid responsiveness, the bidder or offeror must complete, sign, date, and submit this certification statement with their proposal. The bidder or offeror must indicate how they intend to comply with 49 U.S.C. § 50101, and other Made in America Laws, U.S. statutes, guidance, and FAA policies by selecting one on the following certification statements. These statements are mutually exclusive. Bidder must select one or the other (not both) by inserting a checkmark (ü) or the letter "X".

☐ Bidder or offeror hereby certifies that it will comply with 49 U.S.C. § 50101, BABA and other related U.S. statutes, guidance, and policies of the FAA by:

a) Only installing steel and manufactured products produced in the United States;
b) Only installing construction materials defined as: an article, material, or supply – other than an item of primarily iron or steel; a manufactured product; cement and cementitious materials; aggregates such as stone, sand, or gravel; or aggregate binding agents or additives that are or consist primarily of non-ferrous metals; plastic and polymer-based products (including polyvinylchloride, composite building materials, and polymers used in fiber optic cables); glass (including optic glass); lumber or drywall that have been manufactured in the United States.
c) Installing manufactured products for which the Federal Aviation Administration (FAA) has issued a waiver as indicated by inclusion on the current FAA Nationwide Buy American Waivers Issued listing; or
d) Installing products listed as an Excepted Article, Material or Supply in Federal Acquisition Regulation Subpart 25.108.

By selecting this certification statement, the bidder or offeror agrees:

a) To provide to the Airport Sponsor or FAA evidence that documents the source and origin of the steel and manufactured product.
b) To faithfully comply with providing U.S. domestic product.
c) To furnish U.S. domestic product for any waiver request that the FAA rejects.
d) To refrain from seeking a waiver request after establishment of the contract, unless extenuating circumstances emerge that the FAA determines justified.

☐ The bidder or offeror hereby certifies it cannot comply with the 100 percent Buy American Preferences of 49 U.S.C. § 50101(a) but may qualify for a Type 3 waiver under 49 U.S.C. § 50101(b). By selecting this certification statement, the apparent bidder or offeror with the apparent low bid agrees:

a) To submit to the Airport Sponsor or FAA within 15 calendar days of being selected as the responsive bidder, a formal waiver request and required documentation that supports the type of waiver being requested.
b) That failure to submit the required documentation within the specified timeframe is cause for a non-responsive determination that may result in rejection of the proposal.

c) To faithfully comply with providing U.S. domestic products at or above the approved U.S. domestic content percentage as approved by the FAA.
d) To refrain from seeking a waiver request after establishment of the contract, unless extenuating circumstances emerge that the FAA determines justified.

Required Documentation

Type 2 Waiver (**Nonavailability)** - The iron, steel, manufactured goods or construction materials are not available in sufficient quantity or quality in the United States. The required documentation for the Nonavailability waiver is:

a) Completed Content Percentage Worksheet and Final Assembly Questionnaire
b) Record of thorough market research, consideration where appropriate of qualifying alternate items, products, or materials including;
c) A description of the market research activities and methods used to identify domestically manufactured items capable of satisfying the requirement, including the timing of the research and conclusions reached on the availability of sources.

Type 3 Waiver – The cost of the item components and subcomponents produced in the United States is more that 60 percent of the cost of all components and subcomponents of the "item". The required documentation for a Type 3 waiver is:

a) Completed Content Percentage Worksheet and Final Assembly Questionnaire including;
b) Listing of all product components and subcomponents that are not comprised of 100 percent U.S. domestic content (Excludes products listed on the FAA Nationwide Buy American Waivers Issued listing and products excluded by Federal Acquisition Regulation Subpart 25.108 (products of unknown origin must be considered as non-domestic products in their entirety).
c) Cost of non-domestic components and subcomponents, excluding labor costs associated with final assembly at place of manufacture.
d) Percentage of non-domestic component and subcomponent cost as compared to total "item" component and subcomponent costs, excluding labor costs associated with final assembly at place of manufacture.

Type 4 Waiver (Unreasonable Costs) - Applying this provision for iron, steel, manufactured goods or construction materials, would increase the cost of the overall project by more than 25 percent. The required documentation for this waiver is:

a) Completed Content Percentage Worksheet and Final Assembly Questionnaire from
b) At minimum two comparable equal bidders and/or offerors;
c) Receipt or record that demonstrates that supplier scouting called for in Executive Order 14005, indicates that no domestic source exists for the project and/or component;
d) Completed waiver applications for each comparable bid and/or offer.

False Statements: Per 49 U.S.C. § 47126, this certification concerns a matter within the jurisdiction of the Federal Aviation Administration and the making of a false, fictitious, or fraudulent certification may render the maker subject to prosecution under Title 18, United States Code.

Date	Signature
Company Name	Title

A4 CIVIL RIGHTS - GENERAL

GENERAL CIVIL RIGHTS PROVISIONS

In all its activities within the scope of its airport program, the Contractor agrees to comply with pertinent statutes, Executive Orders, and such rules as identified in Title VI List of Pertinent Nondiscrimination Acts and Authorities to ensure that no person shall, on the grounds of race, color, national origin, creed, sex, age, or disability be excluded from participating in any activity conducted with or benefiting from Federal assistance.

This provision is in addition to that required by Title VI of the Civil Rights Act of 1964.

A4.1.1 Specific Clause that is used for General Contract Agreements

The above provision binds the Contractor and subcontractors from the bid solicitation period through the completion of the contract.

A5 CIVIL RIGHTS – TITLE VI ASSURANCE

Insert this list in every contract or agreement, unless the Sponsor has determined and the FAA concurs, that the contract or agreement is not subject to the Nondiscrimination Acts and Authorities. This list can be omitted if the FAA has determined that the contractor or company is already subject to nondiscrimination requirements, which is a rare occurrence.

Title VI List of Pertinent Nondiscrimination Acts and Authorities

During the performance of this contract, the Contractor, for itself, its assignees, and successors in interest (hereinafter referred to as the "Contractor") agrees to comply with the following non-discrimination statutes and authorities; including but not limited to:

- Title VI of the Civil Rights Act of 1964 (42 U.S.C. § 2000d *et seq*., 78 stat. 252) (prohibits discrimination on the basis of race, color, national origin);
- 49 CFR Part 21 (Non-discrimination in Federally-Assisted programs of the Department of Transportation—Effectuation of Title VI of the Civil Rights Act of 1964) including amendments thereto;
- The Uniform Relocation Assistance and Real Property Acquisition Policies Act of 1970, (42 U.S.C. § 4601) (prohibits unfair treatment of persons displaced or whose property has been acquired because of Federal or Federal-aid programs and projects);
- Section 504 of the Rehabilitation Act of 1973 (29 U.S.C. § 794 *et seq*.), as amended (prohibits discrimination on the basis of disability); and 49 CFR part 27 (Nondiscrimination on the Basis of Disability in Programs or Activities Receiving Federal Financial Assistance);
- The Age Discrimination Act of 1975, as amended (42 .U.S.C. § 6101 *et seq*.) (prohibits discrimination on the basis of age);
- Airport and Airway Improvement Act of 1982 (49 U.S.C. § 47123), as amended (prohibits discrimination based on race, creed, color, national origin, or sex);
- The Civil Rights Restoration Act of 1987 (P.L. 100-259) (broadened the scope, coverage and applicability of Title VI of the Civil Rights Act of 1964, the Age Discrimination Act of 1975 and Section 504 of the Rehabilitation Act of 1973, by expanding the definition of the terms "programs or activities" to include all of the programs or activities of the Federal-aid recipients, sub-recipients and contractors, whether such programs or activities are Federally funded or not);
- Titles II and III of the Americans with Disabilities Act of 1990 (42 U.S.C. § 12101, et seq) (prohibit discrimination on the basis of disability in the operation of public entities, public and private transportation systems, places of public accommodation, and certain testing entities) as implemented by U.S. Department of Transportation regulations at 49 CFR Parts 37 and 38;
- Title IX of the Education Amendments of 1972, as amended, which prohibits you from discriminating because of sex in education programs or activities (20 U.S.C. § 1681, et seq).

A5.1.1 Nondiscrimination Requirements/Title VI Clauses for Compliance

The Sponsor must include this contract clause in:

1) Every contract or agreement (unless the Sponsor has determined, and the FAA concurs, that the contract or agreement is not subject to the Nondiscrimination Acts and Authorities); and

2) Service contracts with utility companies that are not already subject to substantively identical nondiscrimination requirements.

3) Other types of contracts with utility companies involving property covered by A5.4.2, A5.4.3, or A5.4.4.

Compliance with Nondiscrimination Requirements:

During the performance of this contract, the Contractor, for itself, its assignees, and successors in interest (hereinafter referred to as the "Contractor"), agrees as follows:

1. **Compliance with Regulations:** The Contractor (hereinafter includes consultants) will comply with the Title VI List of Pertinent Nondiscrimination Acts and Authorities, as they may be amended from time to time, which are herein incorporated by reference and made a part of this contract.
2. **Nondiscrimination:** The Contractor, with regard to the work performed by it during the contract, will not discriminate on the grounds of race, color, national origin), creed, sex, age, or disability in the selection and retention of subcontractors, including procurements of materials and leases of equipment. The Contractor will not participate directly or indirectly in the discrimination prohibited by the Nondiscrimination Acts and Authorities, including employment practices when the contract covers any activity, project, or program set forth in Appendix B of 49 CFR part 21 including amendments thereto.
3. **Solicitations for Subcontracts, including Procurements of Materials and Equipment:** In all solicitations, either by competitive bidding or negotiation made by the Contractor for work to be performed under a subcontract, including procurements of materials, or leases of equipment, each potential subcontractor or supplier will be notified by the Contractor of the contractor's obligations under this contract and the Nondiscrimination Acts and Authorities on the grounds of race, color, or national origin.
4. **Information and Reports:** The Contractor will provide all information and reports required by the Acts, the Regulations, and directives issued pursuant thereto and will permit access to its books, records, accounts, other sources of information, and its facilities as may be determined by the Sponsor or the Federal Aviation Administration to be pertinent to ascertain compliance with such Nondiscrimination Acts and Authorities and instructions. Where any information required of a contractor is in the exclusive possession of another who fails or refuses to furnish the information, the Contractor will so certify to the Sponsor or the Federal Aviation Administration, as appropriate, and will set forth what efforts it has made to obtain the information.
5. **Sanctions for Noncompliance: In** the event of a Contractor's noncompliance with the non-discrimination provisions of this contract, the Sponsor will impose such contract sanctions as it or the Federal Aviation Administration may determine to be appropriate, including, but not limited to:
    a. Withholding payments to the Contractor under the contract until the Contractor complies; and/or

b. Cancelling, terminating, or suspending a contract, in whole or in part.

6. **Incorporation of Provisions:** The Contractor will include the provisions of paragraphs one through six in every subcontract, including procurements of materials and leases of equipment, unless exempt by the Acts, the Regulations, and directives issued pursuant thereto. The Contractor will take action with respect to any subcontract or procurement as the Sponsor or the Federal Aviation Administration may direct as a means of enforcing such provisions including sanctions for noncompliance. Provided, that if the Contractor becomes involved in, or is threatened with litigation by a subcontractor, or supplier because of such direction, the Contractor may request the Sponsor to enter into any litigation to protect the interests of the Sponsor. In addition, the Contractor may request the United States to enter into the litigation to protect the interests of the United States.

A6 CLEAN AIR AND WATER POLLUTION CONTROL

CLEAN AIR AND WATER POLLUTION CONTROL

Contractor agrees to comply with all applicable standards, orders, and regulations issued pursuant to the Clean Air Act (42 U.S.C. §§ 7401-7671q) and the Federal Water Pollution Control Act as amended (33 U.S.C. §§ 1251-1387). The Contractor agrees to report any violation to the Owner immediately upon discovery. The Owner assumes responsibility for notifying the Environmental Protection Agency (EPA) and the Federal Aviation Administration.

Contractor must include this requirement in all subcontracts that exceed $150,000.

A7 CONTRACT WORKHOURS AND SAFETY STANDARDS ACT REQUIREMENTS

CONTRACT WORKHOURS AND SAFETY STANDARDS ACT REQUIREMENTS

1. Overtime Requirements.

No contractor or subcontractor contracting for any part of the contract work which may require or involve the employment of laborers or mechanics shall require or permit any such laborer or mechanic, including watchmen and guards, in any workweek in which he or she is employed on such work to work in excess of forty hours in such workweek unless such laborer or mechanic receives compensation at a rate not less than one and one-half times the basic rate of pay for all hours worked in excess of forty hours in such workweek.

2. Violation; Liability for Unpaid Wages; Liquidated Damages.

In the event of any violation of the clause set forth in paragraph (1) of this clause, the Contractor and any subcontractor responsible therefore shall be liable for the unpaid wages. In addition, such contractor and subcontractor shall be liable to the United States (in the case of work done under contract for the District of Columbia or a territory, to such District or to such territory), for liquidated damages. Such liquidated damages shall be computed with respect to each individual laborer or mechanic, including watchmen and guards, employed in violation of the clause set forth in paragraph (1) of this clause, in the sum of $33 for each calendar day on which such individual was required or permitted to work in excess of the standard workweek of forty hours without payment of the overtime wages required by the clause set forth in paragraph (1) of this clause.

3. Withholding for Unpaid Wages and Liquidated Damages.

The Federal Aviation Administration (FAA) or the Owner shall upon its own action or upon written request of an authorized representative of the Department of Labor withhold or cause to be withheld, from any moneys payable on account of work performed by the contractor or subcontractor under any such contract or any other Federal contract with the same prime contractor, or any other federally-assisted contract subject to the Contract Work Hours and Safety Standards Act, which is held by the same prime contractor, such sums as may be determined to be necessary to satisfy any liabilities of such contractor or subcontractor for unpaid wages and liquidated damages as provided in the clause set forth in paragraph (2) of this clause.

4. Subcontractors.

The Contractor or subcontractor shall insert in any subcontracts the clauses set forth in paragraphs (1) through (4) and also a clause requiring the subcontractor to include these clauses in any lower tier subcontracts. The prime contractor shall be responsible for compliance by any subcontractor or lower tier subcontractor with the clauses set forth in paragraphs (1) through (4) of this clause.

A8 COPELAND "ANTI-KICKBACK" ACT

COPELAND "ANTI-KICKBACK" ACT

Contractor must comply with the requirements of the Copeland "Anti-Kickback" Act (18 USC 874 and 40 USC 3145), as supplemented by Department of Labor regulation 29 CFR part 3. Contractor and subcontractors are prohibited from inducing, by any means, any person employed on the project to give up any part of the compensation to which the employee is entitled. The Contractor and each Subcontractor must submit to the Owner, a weekly statement on the wages paid to each employee performing on covered work during the prior week. Owner must report any violations of the Act to the Federal Aviation Administration.

A9 DAVIS-BACON REQUIREMENTS

DAVIS-BACON REQUIREMENTS

1. Minimum Wages.

(i) All laborers and mechanics employed or working upon the site of the work will be paid unconditionally and not less often than once a week, and without subsequent deduction or rebate on any account (except such payroll deductions as are permitted by the Secretary of Labor under regulations implementing the Copeland Act (29 CFR Part 3)), the full amount of wages and bona fide fringe benefits (or cash equivalent thereof) due at time of payment computed at rates not less than those contained in the wage determination of the Secretary of Labor which is attached hereto and made a part hereof, regardless of any contractual relationship which may be alleged to exist between the Contractor and such laborers and mechanics.

Contributions made or costs reasonably anticipated for bona fide fringe benefits under section 1(b)(2) of the Davis-Bacon Act on behalf of laborers or mechanics are considered wages paid to such laborers or mechanics, subject to the provisions of paragraph (1)(iv) of this section; also, regular contributions made or costs incurred for more than a weekly period (but not less often than quarterly) under plans, funds, or programs which cover the particular weekly period, are deemed to be constructively made or incurred during such weekly period. Such laborers and mechanics shall be paid the appropriate wage rate and fringe benefits on the wage determination for the classification of work actually performed, without regard to skill, except as provided in 29 CFR § 5.5(a)(4). Laborers or mechanics performing work in more than one classification may be compensated at the rate specified for each classification for the time actually worked therein: *Provided,* that the employer's payroll records accurately set forth the time spent in each classification in which work is performed. The wage determination (including any additional classification and wage rates conformed under (1)(ii) of this section) and the Davis-Bacon poster (WH-1321) shall be posted at all times by the Contractor and its subcontractors at the site of the work in a prominent and accessible place where it can easily be seen by the workers.

(ii)(A) The contracting officer shall require that any class of laborers or mechanics, including helpers, which is not listed in the wage determination and which is to be employed under the contract shall be classified in conformance with the wage determination. The contracting officer shall approve an additional classification and wage rate and fringe benefits therefore only when the following criteria have been met:

(1) The work to be performed by the classification requested is not performed by a classification in the wage determination;

(2) The classification is utilized in the area by the construction industry; and

(3) The proposed wage rate, including any bona fide fringe benefits, bears a reasonable relationship to the wage rates contained in the wage determination.

(B) If the Contractor and the laborers and mechanics to be employed in the classification (if known), or their representatives, and the contracting officer agree on the classification and wage rate (including

the amount designated for fringe benefits where appropriate), a report of the action taken shall be sent by the contracting officer to the Administrator of the Wage and Hour Division, U.S. Department of Labor, Washington, DC 20210. The Administrator, or an authorized representative, will approve, modify, or disapprove every additional classification action within 30 days of receipt and so advise the contracting officer or will notify the contracting officer within the 30-day period that additional time is necessary.

(C) In the event the Contractor, the laborers, or mechanics to be employed in the classification, or their representatives, and the contracting officer do not agree on the proposed classification and wage rate (including the amount designated for fringe benefits, where appropriate), the contracting officer shall refer the questions, including the views of all interested parties and the recommendation of the contracting officer, to the Administrator for determination. The Administrator, or an authorized representative, will issue a determination within 30 days of receipt and so advise the contracting officer or will notify the contracting officer within the 30-day period that additional time is necessary.

(D) The wage rate (including fringe benefits where appropriate) determined pursuant to subparagraphs (1)(ii) (B) or (C) of this paragraph, shall be paid to all workers performing work in the classification under this contract from the first day on which work is performed in the classification.

(iii) Whenever the minimum wage rate prescribed in the contract for a class of laborers or mechanics includes a fringe benefit which is not expressed as an hourly rate, the contractor shall either pay the benefit as stated in the wage determination or shall pay another bona fide fringe benefit or an hourly cash equivalent thereof.

(iv) If the Contractor does not make payments to a trustee or other third person, the Contractor may consider as part of the wages of any laborer or mechanic the amount of any costs reasonably anticipated in providing bona fide fringe benefits under a plan or program, *Provided,* that the Secretary of Labor has found, upon the written request of the Contractor, that the applicable standards of the Davis-Bacon Act have been met. The Secretary of Labor may require the Contractor to set aside in a separate account assets for the meeting of obligations under the plan or program.

2. Withholding. The Federal Aviation Administration or the Sponsor shall upon its own action or upon written request of an authorized representative of the Department of Labor withhold or cause to be withheld from the Contractor under this contract or any other Federal contract with the same prime contractor, or any other federally-assisted contract subject to Davis-Bacon prevailing wage requirements, which is held by the same prime contractor, so much of the accrued payments or advances as may be considered necessary to pay laborers and mechanics, including apprentices, trainees, and helpers, employed by the Contractor or any subcontractor the full amount of wages required by the contract. In the event of failure to pay any laborer or mechanic, including any apprentice, trainee, or helper, employed or working on the site of the work, all or part of the wages required by the contract, the Federal Aviation Administration may, after written notice to the Contractor, Sponsor, Applicant, or Owner, take such action as may be necessary to cause the suspension of any further payment, advance, or guarantee of funds until such violations have ceased.

3. Payrolls and Basic Records.

(i) Payrolls and basic records relating thereto shall be maintained by the Contractor during the course of the work and preserved for a period of three years thereafter for all laborers and mechanics working at the site of the work. Such records shall contain the name, address, and social security number of each such worker; his or her correct classification; hourly rates of wages paid (including rates of contributions or costs anticipated for bona fide fringe benefits or cash equivalents thereof of the types described in 1(b)(2)(B) of the Davis-Bacon Act); daily and weekly number of hours worked; deductions made; and actual wages paid. Whenever the Secretary of Labor has found under 29 CFR 5.5(a)(1)(iv) that the wages of any laborer or mechanic include the amount of any costs reasonably anticipated in providing benefits under a plan or program described in section 1(b)(2)(B) of the Davis-Bacon Act, the Contractor shall maintain records that show that the commitment to provide such benefits is enforceable, that the plan or program is financially responsible, and that the plan or program has been communicated in writing to the laborers or mechanics affected, and records which show the costs anticipated or the actual costs incurred in providing such benefits. Contractors employing apprentices or trainees under approved programs shall maintain written evidence of the registration of apprenticeship programs and certification of trainee programs, the registration of the apprentices and trainees, and the ratios and wage rates prescribed in the applicable programs.

(ii)(A) The Contractor shall submit weekly for each week in which any contract work is performed a copy of all payrolls to the Federal Aviation Administration if the agency is a party to the contract, but if the agency is not such a party, the Contractor will submit the payrolls to the applicant, Sponsor, or Owner, as the case may be, for transmission to the Federal Aviation Administration. The payrolls submitted shall set out accurately and completely all of the information required to be maintained under 29 CFR § 5.5(a)(3)(i), except that full social security numbers and home addresses shall not be included on weekly transmittals. Instead, the payrolls shall only need to include an individually identifying number for each employee (*e.g.,* the last four digits of the employee's social security number). The required weekly payroll information may be submitted in any form desired. Optional Form WH–347 is available for this purpose from the Wage and Hour Division Web site at *https://www.dol.gov/agencies/whd/government-contracts/construction/payroll-certification* or its successor site. The prime contractor is responsible for the submission of copies of payrolls by all subcontractors. Contractors and subcontractors shall maintain the full social security number and current address of each covered worker and shall provide them upon request to the Federal Aviation Administration if the agency is a party to the contract, but if the agency is not such a party, the Contractor will submit them to the applicant, Sponsor, or Owner, as the case may be, for transmission to the Federal Aviation Administration, the Contractor, or the Wage and Hour Division of the Department of Labor for purposes of an investigation or audit of compliance with prevailing wage requirements. It is not a violation of this section for a prime contractor to require a subcontractor to provide addresses and social security numbers to the prime contractor for its own records, without weekly submission to the sponsoring government agency (or the applicant, Sponsor, or Owner).

(B) Each payroll submitted shall be accompanied by a "Statement of Compliance," signed by the Contractor or subcontractor or his or her agent who pays or supervises the payment of the persons employed under the contract and shall certify the following:

(1) That the payroll for the payroll period contains the information required to be provided under 29 CFR § 5.5(a)(3)(ii), the appropriate information is being maintained under 29 CFR § 5.5 (a)(3)(i), and that such information is correct and complete;

(2) That each laborer and mechanic (including each helper, apprentice, and trainee) employed on the contract during the payroll period has been paid the full weekly wages earned, without rebate, either directly or indirectly, and that no deductions have been made either directly or indirectly from the full wages earned, other than permissible deductions as set forth in Regulations, 29 CFR Part 3;

(3) That each laborer or mechanic has been paid not less than the applicable wage rates and fringe benefits or cash equivalents for the classification of work performed, as specified in the applicable wage determination incorporated into the contract.

(C) The weekly submission of a properly executed certification set forth on the reverse side of Optional Form WH-347 shall satisfy the requirement for submission of the “Statement of Compliance” required by paragraph (3)(ii)(B) of this section.

(D) The falsification of any of the above certifications may subject the Contractor or subcontractor to civil or criminal prosecution under Section 1001 of Title 18 and Section 231 of Title 31 of the United States Code.

(iii) The Contractor or subcontractor shall make the records required under paragraph (3)(i) of this section available for inspection, copying, or transcription by authorized representatives of the Sponsor, the Federal Aviation Administration, or the Department of Labor and shall permit such representatives to interview employees during working hours on the job. If the Contractor or subcontractor fails to submit the required records or to make them available, the Federal agency may, after written notice to the Contractor, Sponsor, applicant, or Owner, take such action as may be necessary to cause the suspension of any further payment, advance, or guarantee of funds. Furthermore, failure to submit the required records upon request or to make such records available may be grounds for debarment action pursuant to 29 CFR § 5.12.

4. Apprentices and Trainees.

(i) Apprentices. Apprentices will be permitted to work at less than the predetermined rate for the work they performed when they are employed pursuant to and individually registered in a bona fide apprenticeship program registered with the U.S. Department of Labor, Employment and Training Administration, Office of Apprenticeship Training, Employer and Labor Services, or with a State Apprenticeship Agency recognized by the Office, or if a person is employed in his or her first 90 days of probationary employment as an apprentice in such an apprenticeship program, who is not individually registered in the program, but who has been certified by the Office of Apprenticeship Training, Employer and Labor Services or a State Apprenticeship Agency (where appropriate) to be eligible for probationary employment as an apprentice. The allowable ratio of apprentices to journeymen on the

job site in any craft classification shall not be greater than the ratio permitted to the contractor as to the entire work force under the registered program. Any worker listed on a payroll at an apprentice wage rate, who is not registered or otherwise employed as stated above, shall be paid not less than the applicable wage rate on the wage determination for the classification of work actually performed. In addition, any apprentice performing work on the job site in excess of the ratio permitted under the registered program shall be paid not less than the applicable wage rate on the wage determination for the work actually performed. Where a contractor is performing construction on a project in a locality other than that in which its program is registered, the ratios and wage rates (expressed in percentages of the journeyman's hourly rate) specified in the Contractor's or subcontractor's registered program shall be observed. Every apprentice must be paid at not less than the rate specified in the registered program for the apprentice's level of progress, expressed as a percentage of the journeymen hourly rate specified in the applicable wage determination. Apprentices shall be paid fringe benefits in accordance with the provisions of the apprenticeship program. If the apprenticeship program does not specify fringe benefits, apprentices must be paid the full amount of fringe benefits listed on the wage determination for the applicable classification. If the Administrator determines that a different practice prevails for the applicable apprentice classification, fringes shall be paid in accordance with that determination. In the event the Office of Apprenticeship Training, Employer and Labor Services, or a State Apprenticeship Agency recognized by the Office, withdraws approval of an apprenticeship program, the Contractor will no longer be permitted to utilize apprentices at less than the applicable predetermined rate for the work performed until an acceptable program is approved.

(ii) Trainees. Except as provided in 29 CFR § 5.16, trainees will not be permitted to work at less than the predetermined rate for the work performed unless they are employed pursuant to and individually registered in a program which has received prior approval, evidenced by formal certification by the U.S. Department of Labor, Employment and Training Administration. The ratio of trainees to journeymen on the job site shall not be greater than permitted under the plan approved by the Employment and Training Administration. Every trainee must be paid at no less than the rate specified in the approved program for the trainee's level of progress, expressed as a percentage of the journeyman hourly rate specified in the applicable wage determination. Trainees shall be paid fringe benefits in accordance with the provisions of the trainee program. If the trainee program does not mention fringe benefits, trainees shall be paid the full amount of fringe benefits listed on the wage determination unless the Administrator of the Wage and Hour Division determines that there is an apprenticeship program associated with the corresponding journeyman wage rate on the wage determination that provides for less than full fringe benefits for apprentices. Any employee listed on the payroll at a trainee rate that is not registered and participating in a training plan approved by the Employment and Training Administration shall be paid not less than the applicable wage rate on the wage determination for the classification of work actually performed. In addition, any trainee performing work on the job site in excess of the ratio permitted under the registered program shall be paid not less than the applicable wage rate on the wage determination for the work actually performed. In the event the Employment and Training Administration withdraws approval of a training program, the Contractor will no longer be permitted to utilize trainees at less than the applicable predetermined rate for the work performed until an acceptable program is approved.

5. Compliance with Copeland Act Requirements.

The Contractor shall comply with the requirements of 29 CFR Part 3, which are incorporated by reference in this contract.

6. Subcontracts.

The Contractor or subcontractor shall insert in any subcontracts the clauses contained in 29 CFR §§ 5.5(a)(1) through (10) and such other clauses as the Federal Aviation Administration may by appropriate instructions require, and also a clause requiring the subcontractors to include these clauses in any lower tier subcontracts. The prime contractor shall be responsible for compliance by any subcontractor or lower tier subcontractor with all the contract clauses in 29 CFR § 5.5.

7. Contract Termination: Debarment.

A breach of the contract clauses in paragraph 1 through 10 of this section may be grounds for termination of the contract, and for debarment as a contractor and a subcontractor as provided in 29 CFR § 5.12.

8. Compliance with Davis-Bacon and Related Act Requirements.

All rulings and interpretations of the Davis-Bacon and Related Acts contained in 29 CFR Parts 1, 3, and 5 are herein incorporated by reference in this contract.

9. Disputes Concerning Labor Standards.

Disputes arising out of the labor standards provisions of this contract shall not be subject to the general disputes clause of this contract. Such disputes shall be resolved in accordance with the procedures of the Department of Labor set forth in 29 CFR Parts 5, 6, and 7. Disputes within the meaning of this clause include disputes between the Contractor (or any of its subcontractors) and the contracting agency, the U.S. Department of Labor, or the employees or their representatives.

10. Certification of Eligibility.

(i) By entering into this contract, the Contractor certifies that neither it (nor he or she) nor any person or firm who has an interest in the Contractor's firm is a person or firm ineligible to be awarded Government contracts by virtue of section 3(a) of the Davis-Bacon Act or 29 CFR § 5.12(a)(1).

(ii) No part of this contract shall be subcontracted to any person or firm ineligible for award of a Government contract by virtue of section 3(a) of the Davis-Bacon Act or 29 CFR § 5.12(a)(1).

(iii) The penalty for making false statements is prescribed in the U.S. Criminal Code, 18 USC § 1001.

A10 DEBARMENT AND SUSPENSION

A10.1.1 Bidder or Offeror Certification

CERTIFICATION OF OFFEROR/BIDDER REGARDING DEBARMENT

By submitting a bid/proposal under this solicitation, the bidder or offeror certifies that neither it nor its principals are presently debarred or suspended by any Federal department or agency from participation in this transaction.

A10.1.2 Lower Tier Contract Certification

CERTIFICATION OF LOWER TIER CONTRACTORS REGARDING DEBARMENT

The successful bidder, by administering each lower tier subcontract that exceeds $25,000 as a "covered transaction", must confirm each lower tier participant of a "covered transaction" under the project is not presently debarred or otherwise disqualified from participation in this federally-assisted project. The successful bidder will accomplish this by:

1. Checking the System for Award Management at website: http://www.sam.gov.
2. Collecting a certification statement similar to the Certification of Offeror /Bidder Regarding Debarment, above.
3. Inserting a clause or condition in the covered transaction with the lower tier contract.

If the Federal Aviation Administration later determines that a lower tier participant failed to disclose to a higher tier participant that it was excluded or disqualified at the time it entered the covered transaction, the FAA may pursue any available remedies, including suspension and debarment of the non-compliant participant.

A11 DISADVANTAGED BUSINESS ENTERPRISE

A11.1.1 Solicitation Language (Solicitations with No DBE Contract Goal)

The requirements of 49 CFR Part 26 including any amendments thereto apply to this contract. It is the policy of the City of Ormond Beach to practice nondiscrimination based on race, color, sex, or national origin in the award or performance of this contract. The Owner encourages participation by all firms qualifying under this solicitation regardless of business size or ownership.

A12 DISTRACTED DRIVING

TEXTING WHEN DRIVING

In accordance with Executive Order 13513, "Federal Leadership on Reducing Text Messaging While Driving", (10/1/2009) and DOT Order 3902.10, "Text Messaging While Driving", (12/30/2009), the Federal Aviation Administration encourages recipients of Federal grant funds to adopt and enforce safety policies that decrease crashes by distracted drivers, including policies to ban text messaging while driving when performing work related to a grant or subgrant.

In support of this initiative, the Owner encourages the Contractor to promote policies and initiatives for its employees and other work personnel that decrease crashes by distracted drivers, including policies that ban text messaging while driving motor vehicles while performing work activities associated with the project. The Contractor must include the substance of this clause in all sub-tier contracts exceeding $15,000 that involve driving a motor vehicle in performance of work activities associated with the project.

A13 PROHIBITION ON CERTAIN TELECOMMUNICATIONS AND VIDEO SURVEILLANCE SERVICES OR EQUIPMENT

PROHIBITION ON CERTAIN TELECOMMUNICATIONS AND VIDEO SURVEILLANCE SERVICES OR EQUIPMENT

Contractor and Subcontractor agree to comply with mandatory standards and policies relating to use and procurement of certain telecommunications and video surveillance services or equipment in compliance with the National Defense Authorization Act P.L. 115-232, § 889(f)(1)).

A14 FEDERAL FAIR LABOR STANDARDS ACT (FEDERAL MINIMUM WAGE)

All contracts and subcontracts that result from this solicitation incorporate by reference the provisions of 29 CFR Part 201, et seq, the Federal Fair Labor Standards Act (FLSA), with the same force and effect as if given in full text. The FLSA sets minimum wage, overtime pay, recordkeeping, and child labor standards for full and part-time workers.

The CONTRACTOR has full responsibility to monitor compliance to the referenced statute or regulation. The CONTRACTOR must address any claims or disputes that arise from this requirement directly with the U.S. Department of Labor – Wage and Hour Division.

A15 LOBBYING AND INFLUENCING FEDERAL EMPLOYEES

CERTIFICATION REGARDING LOBBYING

The Bidder or Offeror certifies by signing and submitting this bid or proposal, to the best of his or her knowledge and belief, that:

(1) No Federal appropriated funds have been paid or will be paid, by or on behalf of the Bidder or Offeror, to any person for influencing or attempting to influence an officer or employee of an agency, a Member of Congress, an officer or employee of Congress, or an employee of a Member of Congress in connection with the awarding of any Federal contract, the making of any Federal grant, the making of any Federal loan, the entering into of any cooperative agreement, and the extension, continuation, renewal, amendment, or modification of any Federal contract, grant, loan, or cooperative agreement.

(2) If any funds other than Federal appropriated funds have been paid or will be paid to any person for influencing or attempting to influence an officer or employee of any agency, a Member of Congress, an officer or employee of Congress, or an employee of a Member of Congress in connection with this Federal contract, grant, loan, or cooperative agreement, the undersigned shall complete and submit Standard Form-LLL, "Disclosure Form to Report Lobbying," in accordance with its instructions.

(3) The undersigned shall require that the language of this certification be included in the award documents for all sub-awards at all tiers (including subcontracts, subgrants, and contracts under grants, loans, and cooperative agreements) and that all sub-recipients shall certify and disclose accordingly.

This certification is a material representation of fact upon which reliance was placed when this transaction was made or entered into. Submission of this certification is a prerequisite for making or entering into this transaction imposed by 31 U.S.C. § 1352. Any person who fails to file the required certification shall be subject to a civil penalty of not less than $10,000 and not more than $100,000 for each such failure.

A16 OCCUPATIONAL SAFETY AND HEALTH ACT OF 1970

All contracts and subcontracts that result from this solicitation incorporate by reference the requirements of 29 CFR Part 1910 with the same force and effect as if given in full text. The employer must provide a work environment that is free from recognized hazards that may cause death or serious physical harm to the employee. The employer retains full responsibility to monitor its compliance and their subcontractor's compliance with the applicable requirements of the Occupational Safety and Health Act of 1970 (29 CFR Part 1910). The employer must address any claims or disputes that pertain to a referenced requirement directly with the U.S. Department of Labor – Occupational Safety and Health Administration.

A17 PROCUREMENT OF RECOVERED MATERIALS

PROCUREMENT OF RECOVERED MATERIALS

Contractor and subcontractor agree to comply with Section 6002 of the Solid Waste Disposal Act, as amended by the Resource Conservation and Recovery Act, and the regulatory provisions of 40 CFR Part 247. In the performance of this contract and to the extent practicable, the Contractor and subcontractors are to use products containing the highest percentage of recovered materials for items designated by the Environmental Protection Agency (EPA) under 40 CFR Part 247 whenever:

1) The contract requires procurement of $10,000 or more of a designated item during the fiscal year; or
2) The contractor has procured $10,000 or more of a designated item using Federal funding during the previous fiscal year.

The list of EPA-designated items is available at www.epa.gov/smm/comprehensive-procurement-guidelines-construction-products.

Section 6002(c) establishes exceptions to the preference for recovery of EPA-designated products if the contractor can demonstrate the item is:

a) Not reasonably available within a timeframe providing for compliance with the contract performance schedule;
b) Fails to meet reasonable contract performance requirements; or
c) Is only available at an unreasonable price.

A18 TAX DELINQUENCY AND FELONY CONVICTIONS

CERTIFICATION OF OFFEROR/BIDDER REGARDING TAX DELINQUENCY AND FELONY CONVICTIONS

The applicant must complete the following two certification statements. The applicant must indicate its current status as it relates to tax delinquency and felony conviction by inserting a checkmark (ü) in the space following the applicable response. The applicant agrees that, if awarded a contract resulting from this solicitation, it will incorporate this provision for certification in all lower tier subcontracts.

Certifications

1) The applicant represents that it is ( ) is not ( ) a corporation that has any unpaid Federal tax liability that has been assessed, for which all judicial and administrative remedies have been exhausted or have lapsed, and that is not being paid in a timely manner pursuant to an agreement with the authority responsible for collecting the tax liability.

2) The applicant represents that it is ( ) is not ( ) a corporation that was convicted of a criminal violation under any Federal law within the preceding 24 months.

Note

If an applicant responds in the affirmative to either of the above representations, the applicant is ineligible to receive an award unless the Sponsor has received notification from the agency suspension and debarment official (SDO) that the SDO has considered suspension or debarment and determined that further action is not required to protect the Government's interests. The applicant therefore must provide information to the owner about its tax liability or conviction to the Owner, who will then notify the FAA Airports District Office, which will then notify the agency's SDO to facilitate completion of the required considerations before award decisions are made.

Term Definitions

Felony conviction: Felony conviction means a conviction within the preceding twenty four (24) months of a felony criminal violation under any Federal law and includes conviction of an offense defined in a section of the U.S. Code that specifically classifies the offense as a felony and conviction of an offense that is classified as a felony under 18 USC § 3559.

Tax Delinquency: A tax delinquency is any unpaid Federal tax liability that has been assessed, for which all judicial and administrative remedies have been exhausted, or have lapsed, and that is not being paid in a timely manner pursuant to an agreement with the authority responsible for collecting the tax liability.

A19 TERMINATION OF CONTRACT

A19.1.1 Termination for Convenience

TERMINATION FOR CONVENIENCE (CONSTRUCTION & EQUIPMENT CONTRACTS)

The Owner may terminate this contract in whole or in part at any time by providing written notice to the Contractor. Such action may be without cause and without prejudice to any other right or remedy of Owner. Upon receipt of a written notice of termination, except as explicitly directed by the Owner, the Contractor shall immediately proceed with the following obligations regardless of any delay in determining or adjusting amounts due under this clause:

1. Contractor must immediately discontinue work as specified in the written notice.
2. Terminate all subcontracts to the extent they relate to the work terminated under the notice.
3. Discontinue orders for materials and services except as directed by the written notice.
4. Deliver to the Owner all fabricated and partially fabricated parts, completed and partially completed work, supplies, equipment and materials acquired prior to termination of the work, and as directed in the written notice.
5. Complete performance of the work not terminated by the notice.
6. Take action as directed by the Owner to protect and preserve property and work related to this contract that Owner will take possession.

Owner agrees to pay Contractor for:

1. Completed and acceptable work executed in accordance with the contract documents prior to the effective date of termination;
2. Documented expenses sustained prior to the effective date of termination in performing work and furnishing labor, materials, or equipment as required by the contract documents in connection with uncompleted work;
3. Reasonable and substantiated claims, costs, and damages incurred in settlement of terminated contracts with Subcontractors and Suppliers; and
4. Reasonable and substantiated expenses to the Contractor directly attributable to Owner's termination action.

Owner will not pay Contractor for loss of anticipated profits or revenue or other economic loss arising out of or resulting from the Owner's termination action.

The rights and remedies this clause provides are in addition to any other rights and remedies provided by law or under this contract.

A19.1.2 Termination for Default

TERMINATION FOR CAUSE (CONSTRUCTION)

Section 80-09 of FAA Advisory Circular 150/5370-10 establishes standard language for conditions, rights, and remedies associated with Owner termination of this contract for cause due to default of the Contractor.

A20 TRADE RESTRICTION CERTIFICATION

TRADE RESTRICTION CERTIFICATION

By submission of an offer, the Offeror certifies that with respect to this solicitation and any resultant contract, the Offeror –

1) is not owned or controlled by one or more citizens of a foreign country included in the list of countries that discriminate against U.S. firms as published by the Office of the United States Trade Representative (USTR);

2) has not knowingly entered into any contract or subcontract for this project with a person that is a citizen or national of a foreign country included on the list of countries that discriminate against U.S. firms as published by the USTR; and

3) has not entered into any subcontract for any product to be used on the Federal project that is produced in a foreign country included on the list of countries that discriminate against U.S. firms published by the USTR.

This certification concerns a matter within the jurisdiction of an agency of the United States of America and the making of a false, fictitious, or fraudulent certification may render the maker subject to prosecution under Title 18 USC § 1001.

The Offeror/Contractor must provide immediate written notice to the Owner if the Offeror/Contractor learns that its certification or that of a subcontractor was erroneous when submitted or has become erroneous by reason of changed circumstances. The Contractor must require subcontractors provide immediate written notice to the Contractor if at any time it learns that its certification was erroneous by reason of changed circumstances.

Unless the restrictions of this clause are waived by the Secretary of Transportation in accordance with 49 CFR § 30.17, no contract shall be awarded to an Offeror or subcontractor:

1) who is owned or controlled by one or more citizens or nationals of a foreign country included on the list of countries that discriminate against U.S. firms published by the USTR; or
2) whose subcontractors are owned or controlled by one or more citizens or nationals of a foreign country on such USTR list; or
3) who incorporates in the public works project any product of a foreign country on such USTR list.

Nothing contained in the foregoing shall be construed to require establishment of a system of records in order to render, in good faith, the certification required by this provision. The knowledge and information of a contractor is not required to exceed that which is normally possessed by a prudent person in the ordinary course of business dealings.

The Offeror agrees that, if awarded a contract resulting from this solicitation, it will incorporate this provision for certification without modification in all lower tier subcontracts. The Contractor may rely on the certification of a prospective subcontractor that it is not a firm from a foreign country included on the list of countries that discriminate against U.S. firms as published by USTR, unless the Offeror has knowledge that the certification is erroneous.

This certification is a material representation of fact upon which reliance was placed when making an award. If it is later determined that the Contractor or subcontractor knowingly rendered an erroneous certification, the Federal Aviation Administration (FAA) may direct through the Owner cancellation of the contract or subcontract for default at no cost to the Owner or the FAA.

A21 VETERAN'S PREFERENCE

VETERAN'S PREFERENCE

In the employment of labor (excluding executive, administrative, and supervisory positions), the Contractor and all sub-tier contractors must give preference to covered veterans as defined within 49 U.S.C. § 47112. Covered veterans include Vietnam-era veterans, Persian Gulf veterans, Afghanistan-Iraq war veterans, disabled veterans, and small business concerns (as defined by 15 U.S.C. § 632) owned and controlled by disabled veterans. This preference only applies when there are covered veterans readily available and qualified to perform the work to which the employment relates.

A22 DOMESTIC PREFERENCES FOR PROCUREMENTS

CERTIFICATION REGARDING DOMESTIC PREFERENCES FOR PROCUREMENTS

The Bidder or Offeror certifies by signing and submitting this bid or proposal that, to the greatest extent practicable, the Bidder or Offeror has provided a preference for the purchase, acquisition, or use of goods, products, or materials produced in the United States (including, but not limited to, iron, aluminum, steel, cement, and other manufactured products) in compliance with 2 CFR § 200.322.

A23 PROHIBITION OF COVERED UNMANNED AIRCRAFT SYSTEMS (UAS)

The Bidder or Offeror certifies that they are aware of and comply with relevant Federal statutes and regulations, including those from the Federal Aviation Administration (FAA), for operating unmanned aircraft systems (UAS) in accordance, and in compliance with all related requirements in the FAA Reauthorization Act of 2024 (Public Law 118-63), section 936 (49 U.S.C. § 44801 note).

Contractor warrants that all UAS operations will be conducted in full compliance with all applicable Federal Aviation Administration (FAA) regulations, including but not limited to 14 CFR Part 107, and any other applicable local, state, or Federal laws and regulations.

Sponsors and subgrant recipients cannot use AIP grant funds to enter into, extend, or renew a contract related to covered unmanned aircraft systems (UAS). This includes both procurement and operational contracts, as well as contracts with entities that operate such systems.

"General Decision Number: FL20260232 05/18/2026

State: Florida

Construction Types: Building

Counties: Florida Counties of
Flagler and Volusia

Modification Number	Publication Date
0	01/02/2026
1	05/18/2026

ASBE0067-003 01/01/2021

	Rates	Fringes
ASBESTOS WORKER/HEAT & FROST INSULATOR	$ 30.12	13.11

ELEC0756-005 09/01/2025

	Rates	Fringes
ELECTRICIAN	$ 31.02	14.43

ELEV0139-002 01/01/2025

	Rates	Fringes
ELEVATOR MECHANIC FOOTNOTE: A. EMPLOYER CONTRIBUTIONS 8% OF REGULAR HOURLY RATE TO VACATION PAY CREDIT FOR EMPLOYEE WHO HAS WORKED IN BUSINESS MORE THAN 5 YEARS; EMPLOYER CONTRIBUTIONS 6% OF REGULAR HOURLY RATE TO VACATION PAY CREDIT FOR EMPLOYEE WHO HAS WORKED IN BUSINESS LESS THAN 5 YEARS. B. PAID HOLIDAYS: NEW YEAR'S DAY; MEMORIAL DAY; INDEPENDENCE DAY; LABOR DAY; VETERANS DAY; THANKSGIVING DAY; THE FRIDAY AFTER THANKSGIVING DAY; AND CHRISTMAS DAY	$ 53.73	38.44

ENGI0487-022 07/01/2016

	Rates	Fringes
OPERATOR: OILER	$ 23.50	9.20
OPERATOR: MECHANIC	$ 32.05	9.20
OPERATOR: FORKLIFT	$ 23.25	9.20

ENGI0673-016 05/01/2024

	Rates	Fringes
OPERATOR: CRANE (TOWER CRANE; CRAWLER CRANE; TRUCK CRANE; HYDRO CRANE)	$ 36.00	15.10
OPERATOR: CRANE (GANTRY CRANE; BRIDGE CRANE)	$ 36.00	15.10

IRON0402-001 10/01/2024

	Rates	Fringes
IRONWORKER: ORNAMENTAL	$ 28.90	15.66

PLUM0295-002 01/01/2025

	Rates	Fringes
PLUMBER	$ 41.60	22.68

PLUM0295-005 01/01/2025

	Rates	Fringes
HVAC MECHANIC: INCLUDES PIPE AND UNIT INSTALLATION.	$ 33.90	15.15

SFFL0821-004 07/01/2025

	Rates	Fringes
SPRINKLER FITTER (FIRE SPRINKLERS)	$ 35.03	24.00

SHEE0015-006 07/01/2023

	Rates	Fringes
SHEET METAL WORKER (INCLUDES HVAC DUCT INSTALLATION)	$ 25.75	16.92

SUFL2014-041 08/16/2016

	Rates	Fringes
TRUCK DRIVER: LOWBOY TRUCK	$ 14.24	0.00
TRUCK DRIVER: DUMP TRUCK	$ 12.95	2.28
TILE SETTER	$ 17.25	1.74
ROOFER	$ 16.59	0.00
PIPEFITTER, EXCLUDES HVAC PIPE AND UNIT INSTALLATION	$ 23.16	10.34
PAINTER: BRUSH, ROLLER AND SPRAY	$ 13.54	0.00
OPERATOR: ROLLER	$ 14.43	4.78
OPERATOR: LOADER	$ 16.30	0.00
OPERATOR: GRADER/BLADE	$ 18.97	0.00
OPERATOR: BULLDOZER	$ 15.40	1.90
OPERATOR: BACKHOE/EXCAVATOR/TRACKHOE	$ 17.80	2.81
LABORER: PIPELAYER	$ 15.00	0.54
LABORER: MASON TENDER - CEMENT/CONCRETE	$ 12.00	0.00
LABORER: COMMON OR GENERAL	$ 11.61	0.00
IRONWORKER, STRUCTURAL	$ 21.87	0.00
IRONWORKER, REINFORCING	$ 22.81	11.58
CEMENT MASON/CONCRETE FINISHER	$ 19.00	0.00
CARPENTER	$ 17.92	0.00

WELDERS - Receive rate prescribed for craft performing operation to which welding is incidental.

==========

Note: Executive Order (EO) 13706, Establishing Paid Sick Leave for Federal Contractors applies to all contracts subject to the Davis-Bacon Act for which the contract is awarded (and any solicitation was issued) on or after January 1, 2017. If this contract is covered by the EO, the contractor must provide employees with 1 hour of paid sick leave for every 30 hours they work, up to 56 hours of paid sick leave each year. Employees must be permitted to use paid sick leave for their own illness, injury or other health-related needs, including preventive care; to assist a family member (or person who is like family to the employee) who is ill, injured, or has other health-related needs, including preventive care; or for reasons resulting from, or to assist a family member (or person who is like family to the employee) who is a victim of, domestic violence, sexual assault, or stalking. Additional information

on contractor requirements and worker protections under the EO is available at https://www.dol.gov/agencies/whd/government-contracts.

Note: Executive Order 13658 generally applies to contracts subject to the Davis-Bacon Act that were awarded on or between January 1, 2015 and January 29, 2022, and that have not been renewed or extended on or after January 30, 2022. Executive Order 13658 does not apply to contracts subject only to the Davis-Bacon Related Acts regardless of when they were awarded. If a contract is subject to Executive Order 13658, the contractor must pay all covered workers at least $13.65 per hour (or the applicable wage rate listed on this wage determination, if it is higher) for all hours spent performing on the contract from May 11, 2026, through December 31, 2026. The applicable Executive Order minimum wage rate will be adjusted annually. Additional information on contractor requirements and worker protections under Executive Order 13658 is available at www.dol.gov/whd/govcontracts.

Unlisted classifications needed for work not included within the scope of the classifications listed may be added after award only as provided in the labor standards contract clauses (29CFR 5.5 (a) (1) (iii)).

The body of each wage determination lists the classifications and wage rates that have been found to be prevailing for the type(s) of construction and geographic area covered by the wage determination. The classifications are listed in alphabetical order under rate identifiers indicating whether the particular rate is a union rate (current union negotiated rate), a survey rate, a weighted union average rate, a state adopted rate, or a supplemental classification rate.

Union Rate Identifiers

A four-letter identifier beginning with characters other than "SU", "UAVG", "SA", or "SC" denotes that a union rate was prevailing for that classification in the survey. Example: PLUM0198-005 07/01/2024. PLUM is an identifier of the union whose collectively bargained rate prevailed in the survey for this classification, which in this example would be Plumbers. 0198 indicates the local union number or district council number where applicable, i.e., Plumbers Local 0198. The next number, 005 in the example, is an internal number used in processing the wage determination. The date, 07/01/2024 in the example, is the effective date of the most current negotiated rate.

Union prevailing wage rates are updated to reflect all changes over time that are reported to WHD in the rates in the collective bargaining agreement (CBA) governing the classification.

Union Average Rate Identifiers

The UAVG identifier indicates that no single rate prevailed for those classifications, but that 100% of the data reported for the classifications reflected union rates. EXAMPLE: UAVG-OH-0010 01/01/2024. UAVG indicates that the rate is a weighted union average rate. OH indicates the State of Ohio. The next number, 0010 in the example, is an internal number used in producing the wage determination. The date, 01/01/2024 in the example, indicates the date the wage determination was updated to reflect the most current union average rate.

A UAVG rate will be updated once a year, usually in January, to

reflect a weighted average of the current rates in the collective bargaining agreements on which the rate is based.

Survey Rate Identifiers

The ﷿SU﷿ identifier indicates that either a single non-union rate prevailed (as defined in 29 CFR 1.2) for this classification in the survey or that the rate was derived by computing a weighted average rate based on all the rates reported in the survey for that classification. As a weighted average rate includes all rates reported in the survey, it may include both union and non-union rates. Example: SUFL2022-007 6/27/2024. SU indicates the rate is a single non-union prevailing rate or a weighted average of survey data for that classification. FL indicates the State of Florida. 2022 is the year of the survey on which these classifications and rates are based. The next number, 007 in the example, is an internal number used in producing the wage determination. The date, 6/27/2024 in the example, indicates the survey completion date for the classifications and rates under that identifier.

﷿SU﷿ wage rates typically remain in effect until a new survey is conducted. However, the Wage and Hour Division (WHD) has the discretion to update such rates under 29 CFR 1.6(c)(1).

State Adopted Rate Identifiers

The ﷿SA﷿ identifier indicates that the classifications and prevailing wage rates set by a state (or local) government were adopted under 29 C.F.R 1.3(g)-(h). Example: SAME2023-007 01/03/2024. SA reflects that the rates are state adopted. ME refers to the State of Maine. 2023 is the year during which the state completed the survey on which the listed classifications and rates are based. The next number, 007 in the example, is an internal number used in producing the wage determination. The date, 01/03/2024 in the example, reflects the date on which the classifications and rates under the ﷿SA﷿ identifier took effect under state law in the state from which the rates were adopted.

WAGE DETERMINATION APPEALS PROCESS

1) Has there been an initial decision in the matter? This can be:

a) a survey underlying a wage determination
b) an existing published wage determination
c) an initial WHD letter setting forth a position on a wage determination matter
d) an initial conformance (additional classification and rate) determination

On survey related matters, initial contact, including requests for summaries of surveys, should be directed to the WHD Branch of Wage Surveys. Requests can be submitted via email to davisbaconinfo@dol.gov or by mail to:

Branch of Wage Surveys
Wage and Hour Division
U.S. Department of Labor
200 Constitution Avenue, N.W.
Washington, DC 20210

Regarding any other wage determination matter such as conformance decisions, requests for initial decisions should be directed to the WHD Branch of Construction Wage Determinations. Requests can be submitted via email to BCWD-Office@dol.gov or by mail to:

Branch of Construction Wage Determinations
Wage and Hour Division

U.S. Department of Labor
200 Constitution Avenue, N.W.
Washington, DC 20210

2) If an initial decision has been issued, then any interested party (those affected by the action) that disagrees with the decision can request review and reconsideration from the Wage and Hour Administrator (See 29 CFR Part 1.8 and 29 CFR Part 7). Requests for review and reconsideration can be submitted via email to dba.reconsideration@dol.gov or by mail to:

Wage and Hour Administrator
U.S. Department of Labor
200 Constitution Avenue, N.W.
Washington, DC 20210

The request should be accompanied by a full statement of the interested party's position and any information (wage payment data, project description, area practice material, etc.) that the requestor considers relevant to the issue.

3) If the decision of the Administrator is not favorable, an interested party may appeal directly to the Administrative Review Board (formerly the Wage Appeals Board). Write to:

Administrative Review Board
U.S. Department of Labor
200 Constitution Avenue, N.W.
Washington, DC 20210.

==========

END OF GENERAL DECISION

"

SECTION C-102 TEMPORARY AIR AND WATER POLLUTION, SOIL EROSION, AND SILTATION CONTROL

DESCRIPTION

102-1 This item shall consist of temporary control measures as shown on the plans or as ordered by the Resident Project Representative (RPR) during the life of a contract to control pollution of air and water, soil erosion, and siltation through the use of silt fences, berms, dikes, dams, sediment basins, fiber mats, gravel, mulches, grasses, slope drains, and other erosion control devices or methods.

Temporary erosion control shall be in accordance with the approved erosion control plan; the approved Construction Safety and Phasing Plan (CSPP) and AC 150/5370-2, *Operational Safety on Airports During Construction*. The temporary erosion control measures contained herein shall be coordinated with the permanent erosion control measures specified as part of this contract to the extent practical to assure economical, effective, and continuous erosion control throughout the construction period.

Temporary control may include work outside the construction limits such as borrow pit operations, equipment and material storage sites, waste areas, and temporary plant sites.

Temporary control measures shall be designed, installed and maintained to minimize the creation of wildlife attractants that have the potential to attract hazardous wildlife on or near public-use airports.

MATERIALS

102-2.1 GRASS. Grass that will not compete with the grasses sown later for permanent cover per Item T-901shall be a quick-growing species (such as ryegrass, Italian ryegrass, or cereal grasses) suitable to the area providing a temporary cover. Selected grass species shall not create a wildlife attractant.

102-2.2 MULCHES. Mulches may be hay, straw, fiber mats, netting, bark, wood chips, or other suitable material reasonably clean and free of noxious weeds and deleterious materials per Item T-908. Mulches shall not create a wildlife attractant.

102-2.3 FERTILIZER. Fertilizer shall be a standard commercial grade and shall conform to all federal and state regulations and to the standards of the Association of Official Agricultural Chemists.

102-2.4 SLOPE DRAINS. Slope drains may be constructed of pipe, fiber mats, rubble, concrete, asphalt, or other materials that will adequately control erosion.

102-2.5 SILT FENCE. Silt fence shall consist of polymeric filaments which are formed into a stable network such that filaments retain their relative positions. Synthetic filter fabric shall contain ultraviolet ray inhibitors and stabilizers to provide a minimum of six months of expected usable construction life. Silt fence shall meet the requirements of ASTM D6461.

102-2.6 OTHER. All other materials shall meet commercial grade standards and shall be approved by the RPR before being incorporated into the project.

CONSTRUCTION REQUIREMENTS

102-3.1 GENERAL. In the event of conflict between these requirements and pollution control laws, rules, or regulations of other federal, state, or local agencies, the more restrictive laws, rules, or regulations shall apply.

The RPR shall be responsible for assuring compliance to the extent that construction practices, construction operations, and construction work are involved.

102-3.2 SCHEDULE. Prior to the start of construction, the Contractor shall submit schedules in accordance with the approved Construction Safety and Phasing Plan (CSPP) and the plans for accomplishment of temporary and permanent erosion control work for clearing and grubbing; grading; construction; paving; and structures at watercourses. The Contractor shall also submit a proposed method of erosion and dust control on haul roads and borrow pits and a plan for disposal of waste materials. Work shall not be started until the erosion control schedules and methods of operation for the applicable construction have been accepted by the RPR.

102-3.3 CONSTRUCTION DETAILS. The Contractor will be required to incorporate all permanent erosion control features into the project at the earliest practicable time as outlined in the plans and approved CSPP. Except where future construction operations will damage slopes, the Contractor shall perform the permanent seeding and mulching and other specified slope protection work in stages, as soon as substantial areas of exposed slopes can be made available. Temporary erosion and pollution control measures will be used to correct conditions that develop during construction that were not foreseen during the design stage; that are needed prior to installation of permanent control features; or that are needed temporarily to control erosion that develops during normal construction practices, but are not associated with permanent control features on the project.

Where erosion may be a problem, schedule and perform clearing and grubbing operations so that grading operations and permanent erosion control features can follow immediately if project conditions permit. Temporary erosion control measures are required if permanent measures cannot immediately follow grading operations. The RPR shall limit the area of clearing and grubbing, excavation, borrow, and embankment operations in progress, commensurate with the Contractor’s capability and progress in keeping the finish grading, mulching, seeding, and other such permanent control measures current with the accepted schedule. If seasonal limitations make such coordination unrealistic, temporary erosion control measures shall be taken immediately to the extent feasible and justified as directed by the RPR.

The Contractor shall provide immediate permanent or temporary pollution control measures to minimize contamination of adjacent streams or other watercourses, lakes, ponds, or other areas of water impoundment as directed by the RPR. If temporary erosion and pollution control measures are required due to the Contractor’s negligence, carelessness, or failure to install permanent controls as a part of the work as scheduled or directed by the RPR, the work shall be performed by the Contractor and the cost shall be incidental to this item.

The RPR may increase or decrease the area of erodible earth material that can be exposed at any time based on an analysis of project conditions.

The erosion control features installed by the Contractor shall be maintained by the Contractor during the construction period.

Provide temporary structures whenever construction equipment must cross watercourses at frequent intervals. Pollutants such as fuels, lubricants, bitumen, raw sewage, wash water from concrete mixing operations, and other harmful materials shall not be discharged into any waterways, impoundments or into natural or manmade channels.

102-3.4 INSTALLATION, MAINTENANCE AND REMOVAL OF SILT FENCE. Silt fences shall extend a minimum of 16 inches (41 cm) and a maximum of 34 inches (86 cm) above the ground surface. Posts shall be set no more than 10 feet (3 m) on center. Filter fabric shall be cut from a continuous roll to the length required minimizing joints where possible. When joints are necessary, the fabric shall be spliced at a support post with a minimum 12-inch (300-mm) overlap and securely sealed. A trench shall be excavated approximately 4 inches (100 mm) deep by 4 inches (100 mm) wide on the upslope side of the silt fence. The trench shall be backfilled and the soil compacted over the silt fence fabric. The Contractor shall remove and dispose of silt that accumulates during construction and prior to establishment of permanent erosion control. The fence shall be maintained in good working condition until permanent erosion control is established. Silt fence shall be removed upon approval of the RPR.

METHOD OF MEASUREMENT & BASIS OF PAYMENT

102-4.1 Temporary erosion and pollution control work are considered a necessary and

REFERENCES

The publications listed below form a part of this specification to the extent referenced. The publications are referred to within the text by the basic designation only.

Advisory Circulars (AC)

AC 150/5200-33 *Hazardous Wildlife Attractants on or Near Airports*

AC 150/5370-2 *Operational Safety on Airports During Construction*

ASTM International (ASTM)

ASTM D6461 *Standard Specification for Silt Fence Materials*

United States Department of Agriculture (USDA)

FAA/USDA Wildlife Hazard Management at Airports, A Manual for Airport Personnel

END OF ITEM C-102

SECTION C-105 MOBILIZATION

105-1.1 DESCRIPTION. This item of work shall consist of, but is not limited to, work and operations necessary for the movement of personnel, equipment, material and supplies to and from the project site for work on the project except as provided in the contract as separate pay items.

105-1.2 MOBILIZATION LIMIT. Mobilization shall be limited to 10 percent of the total project cost.

105-1.3 POSTED NOTICES. Prior to commencement of construction activities, the Contractor must post the following documents in a prominent and accessible place where they may be easily viewed by all employees of the prime Contractor and by all employees of subcontractors engaged by the prime Contractor: Equal Employment Opportunity (EEO) Poster "Equal Employment Opportunity is the Law" in accordance with the Office of Federal Contract Compliance Programs Executive Order 11246, as amended; Davis Bacon Wage Poster (WH 1321) - DOL "Notice to All Employees" Poster; and Applicable Davis-Bacon Wage Rate Determination. These notices must remain posted until final acceptance of the work by the Owner.

105-1.4 ENGINEER/RPR FIELD OFFICE. An Engineer/RPR field office is not required.

METHOD OF MEASUREMENT

105-2.1 BASIS OF MEASUREMENT AND PAYMENT. Based upon the contract lump sum price for "Mobilization" partial payments will be allowed as follows:

a. With first pay request, 50%.

b. When 50% or more of the original contract is earned, an additional 40%.

c. After Final Inspection, Staging area clean-up and delivery of all Project Closeout materials as required by Section 90, paragraph 90-11, *Contractor Final Project Documentation,* the final 10%.

BASIS OF PAYMENT

105-3.1 PAYMENT WILL BE MADE UNDER:

Item C-105	Mobilization (10% Maximum) – per Lump Sum

REFERENCES

The publications listed below form a part of this specification to the extent referenced. The publications are referred to within the text by the basic designation only.

Office of Federal Contract Compliance Programs (OFCCP)

Executive Order 11246, as amended

EEOC-P/E-1 – Equal Employment Opportunity is the Law Poster

United States Department of Labor, Wage and Hour Division (WHD)

WH 1321 – Employee Rights under the Davis-Bacon Act Poster

END OF SECTION C-105

SECTION P-100 - FDOT STANDARD SPECIFICATIONS FOR ROAD AND BRIDGE CONSTRUCTION

PART 1 - GENERAL

1.1 PURPOSE

A. The purpose of this Section is for the adoption by Reference of, The **Florida Department of Transportation Standard Specifications for Road and Bridge Construction, Current Edition (FDOT Standard Specifications)**, for Technical Criteria and Description of the Division II – Construction Details, and Division III - Materials, which are typically associated with roadway construction and related work. The FY26/27 FDOT Standard Specifications table of contents has been included at the end of this specification for clarity.

B. Adoption of these FDOT Standard Specifications shall not be limited to roadway construction, but may include but not be limited to Paving, Grading, and Drainage improvements related to Site Work/Civil Projects of the North Perry Airport, as applicable.

C. Unless specifically stated otherwise, Division 1 of this Project Manual, takes precedence over the applicable sections of the FDOT Standard Specifications, i.e., Division I – General Requirements and Covenants.

1.2 RELATED DOCUMENTS

A. Drawings and General Provisions of the Contract, including General and Supplementary Conditions and Division 1 Specification Sections including sustainability requirements, apply to this Section.

B. When the FDOT Standard Index Drawings are referenced on the Drawings or in the Contract Documents, the work or item shall comply with the Florida Department of Transportation Design Standards for Design, Construction, Maintenance and Utility Operations on the State Highway System, Current Edition, except as specifically modified elsewhere in the Contract Documents.

PART 2 – DEFINITIONS

2.1 DEFINITION OF TERMS

A. The following paragraphs redefine the FDOT terms (as listed in Division I, Part 1) to be consistent with the Contract Documents.

1. **Contractor** shall mean the entity entering into the Contractual Agreement with Flagler County for the execution and delivery of the project.

2. **Contractor's Engineer of Record** shall mean an Engineer, Licensed by the State of Florida, hired by the Contractor to perform Professional Engineering Design Services related to the project. Submittals made by the Contractor's Engineer of Record to the Owner under the provisions of Division 1, shall carry his/her signature, date and seal. (**Related Definition: Contractor's Surveyor** shall mean a Surveyor hired by the Contractor to perform project related services, such as but not limited to, staking and layout of lines and grades of the work, and recording As-Built (As-Constructed) conditions. Submittals made by the Contractor's Surveyor to the Owner under the provisions of Division 1, shall be prepared from a Florida Licensed Surveyor, and shall carry his/her signature, date and seal.)

3. **Department** where used to denote an approved plant, material, product, or similar reference, shall mean the Florida Department of Transportation. Where used to denote the Contracting Entity, it shall mean the County of Flagler, or the Owner's Authorized Representative, or Engineer.

4. **Engineer** shall mean Flagler County, or their duly authorized representative, (Owner's Authorized Representative, or Engineer).

5. **Engineer of Record** shall mean the Professional Engineer or Engineering Firm that develops the criteria and concept for the project, performs the analysis, and is responsible for the preparation of the Plans (Drawings) and Specifications of the work.

6. **Inspector** shall mean a duly authorized entity of Flagler County, the Engineer, and/or the Engineer of Record, assigned to make official inspections of the materials furnished and of the work performed by the Contractor. Additional Inspection Oversight may be performed by any Authority Having Jurisdiction (AHJ), including but not limited to the South Florida Water Management District, Florida Department of Environmental Protection, etc.

7. **Laboratory** shall mean any official testing laboratory used by Flagler County, the Engineer, and/or the Engineer of Record. (**Related Definition: Contractor's Laboratory** shall have a similar definition representing the Contractor for Quality Control purposes, and/or for confirmation/comparison to the Laboratory's testing results.)

8. **Right of Way** shall not be limited to defined limits of titled land around a roadway. As used in the FDOT Standard Specifications, Right of Way shall encompass all areas where the specified work is depicted in the Contract Documents.

9. **Secretary** shall mean Flagler County or their Engineer.

10. **Specialty Engineer**: See **Contractor's Engineer of Record**, except used for the design and drawing preparation of components, systems, or installation methods and equipment for specific temporary portions of the work, or for special items of the permanent works not fully detailed in the plans and required to be furnished by the Contractor such as but not limited to foundation designs, non-standard expansion joints, MSE wall designs, and other specialty items.

PART 3 – EXECUTION

3.1 MEASUREMENT AND PAYMENT

Method of measurement and basis of payment for material and work performed in conformance with the above specifications shall be as indicated on the BID SCHEDULE at the unit shown on the bid schedule. The costs listed on the bid schedule shall be full compensation for labor, equipment, materials and incidentals necessary to complete the work in conformance with the Plans and Specification to the satisfaction of Flagler County. Incidentals include, but are not limited to, items which have specific FDOT bid item numbers in the referenced specifications but are not included in the Bid Schedule.

3.2 CONFLICT RESOLUTION

A. In the event of any conflict(s) between the Contract Documents and the FDOT Standard Specifications, the precedence in resolving such conflict(s) shall be as follows:

1. Bidding and Contract Requirements, and Technical Specifications for the project as located in this project Manual shall govern over FDOT Bid and Contract Requirements.

2. Greater Quantities shall govern over lesser.

3. Higher quality and/or more stringent requirements as adjudged by the Engineer shall govern over lesser.

4. Where FDOT Specifications refer to the "Engineer", "Engineer of Tests", or "Division of Tests", it shall be understood to mean the Engineer of the Owner as Stated in the CONTRACT.

PART 4 – QUALITY CONTROL (QC) AND QUALITY ASSURANCE (QA) TESTING

4.1 ACCEPTANCE TESTING IS ALSO THE RESPONSIBILITY OF THE CONTRACTOR

A. All verification testing required in the technical specifications shall be the responsibility of the Contractor. The Contractor shall utilize an independent pre-approved, accredited and licensed testing company to perform verification testing at the frequencies show in the specifications. The Contractor shall send the signed and sealed test results to the Engineer prior to moving on to the next work item. Payment for QC and QA Verification shall be included in each work item listed on the bid schedule. No additional payment will be made for QC and QA Verification testing.

B. Any references in the technical specifications to the Engineer or Owner performing testing, such as "*the Engineer shall be responsible for verification testing…*" or "*the Engineer will perform…*" shall be revised to be the responsibility of the Contractor under the same requirements and at the same frequency. The Contractor shall be responsible for providing the required testing results to the Engineer for material acceptance.

FDOT STANDARD SPECIFICATIONS
TABLE OF CONTENTS

DIVISION I

GENERAL REQUIREMENTS AND COVENANTS

Section — Page

1 Definitions and Terms 1
2 Proposal Requirements and Conditions 10
3 Award and Execution of Contract 16
4 Scope of the Work 20
5 Control of the Work 33
6 Control of Materials 57
7 Legal Requirements and Responsibility to the Public 63
8 Prosecution and Progress 89
9 Measurement and Payment 103

DIVISION II CONSTRUCTION DETAILS

GENERAL CONSTRUCTION OPERATIONS

100 Construction Equipment - General Requirements 114
101 Mobilization 116
102 Maintenance of Traffic 117
103 Temporary Work Structures 140
104 Prevention, Control, and Abatement of Erosion and Water Pollution 141
105 Contractor Quality Control General Requirements 148
107 Litter Removal and Mowing 167
108 Monitor Existing Structures 169

CLEARING CONSTRUCTION SITE

110 Clearing and Grubbing 172

EARTHWORK AND RELATED OPERATIONS

120 Excavation and Embankment 181
121 Flowable Fill 199
125 Excavation and Embankment for Structures and Pipe 202
145 Geosynthetic Reinforcement 210
160 Stabilizing 218
175 Cracking and Reseating Existing Concrete Pavement 225

BASE COURSES

200 Rock Base 226
204 Graded Aggregate Base 235
210 Reworking Limerock Base 238
230 Limerock Stabilized Base 240

234 Superpave Asphalt Base 242
283 Reclaimed Asphalt Pavement Base 245
285 Optional Base Course 248
286 Driveway Base 253
288 Cement Treated Permeable Base 255
290 Granular Subbase 259

BITUMINOUS TREATMENTS, SURFACE COURSES, AND CONCRETE PAVEMENT

300 Prime and Tack Coats 261
320 Hot Mix Asphalt – Plant Methods and Equipment 266
327 Milling of Existing Asphalt Pavement 279
330 Hot Mix Asphalt – General Construction Requirements 283
334 Superpave Asphalt Concrete 302
337 Asphalt Concrete Friction Courses 324
338 Value Added Asphalt Pavement 334
339 Miscellaneous Asphalt Pavement 341
341 Asphalt Membrane Interlayer 343
346 Structural Portland Cement Concrete 346
347 Portland Cement Concrete - Class NS 369
350 Cement Concrete Pavement 371
352 Grinding Concrete Pavement 383
353 Concrete Pavement Slab Replacement 388
355 Value Added Portland Cement Concrete Pavement 393
370 Bridge Approach Expansion Joints 397

STRUCTURES

400 Concrete Structures 398
407 Three-Sided Precast Concrete Culvert 437
410 Precast Concrete Box Culvert 444
411 Epoxy Injection of Cracks in Concrete Structures 452
413 Sealing Cracks and Concrete Structure Surfaces 455
415 Reinforcing for Concrete 462
416 Installation of Post-Installed Anchor Systems and Dowels for Structural Applications in Concrete Elements 469
425 Inlets, Manholes, and Junction Boxes 472
430 Pipe Culverts 476
431 Pipe Liner 489
435 Structural Plate Pipe and Pipe Arch Culverts 491
436 Trench Drain 493
440 Underdrains 495
443 French Drains 497
446 Edgedrain (Draincrete) 499
449 Precast Concrete Drainage Products 501
450 Precast Prestressed Concrete Construction 505
451 Prestressed Soil Anchors 535
452 Precast Segmental Bridge Construction 550
455 Structures Foundations 569

458 Bridge Deck Joints 640
459 Bitumen Coating and Polyethylene Sheeting on Concrete Piles 645
460 Structural Steel and Miscellaneous Metals 647
461 Multirotational Bearings 673
462 Post-Tensioning 676
470 Timber Structures 710
471 Fiber Reinforced Polymer Fender Systems 713

INCIDENTAL CONSTRUCTION

502 Shear Connectors 716
504 Steel Grid Floors 721
506 Bridge Drainage System 723
510 Navigation Lights for Fixed Bridges 724
514 Geosynthetic for Drainage Applications 728
515 Metal Pedestrian/Bicycle Railings, Guiderails, and Handrails 731
520 Concrete Gutter, Curb Elements and Traffic Separator 734
521 Concrete Barriers, Traffic Railings, and Parapets 738
522 Concrete Sidewalk and Driveways 742
523 Patterned Pavement 744
524 Concrete Ditch and Slope Pavement 745
525 Asphalt Concrete Curb 747
526 Architectural Pavers 748
527 Detectable Warnings 751
530 Revetment Systems 752
534 Noise and Perimeter Walls 761
536 Guardrail 764
538 Resetting Guardrail 769
544 Crash Cushions 771
546 Rumble Strips 773
548 Retaining Wall Systems 775
550 Fencing 791
555 Directional Bore 795
556 Jack and Bore 800
560 Coating New Structural Steel 809
561 Coating Existing Structural Steel 816
562 Repair of Galvanized Surfaces 823
563 Anti-Graffiti Coatings 824
570 Performance Turf 826
571 Plastic Erosion Mat 831
591 Landscape Irrigation Sleeves 832

TRAFFIC CONTROL SIGNALS AND DEVICES

603 General Requirements for Traffic Control Signals and Devices 833
608 Manufacturers' Warranties for Traffic Control Signals and Devices 836
611 Acceptance Procedures for Traffic Control Signals, Devices, and Intelligent Transportation System Devices 837
620 Grounding and Lightning Protection 844
630 Conduit 850

632 Signal Cable 859
633 Communication Cable 861
634 Span Wire Assembly 871
635 Pull Boxes, Splice Boxes, Junction Boxes, and Fiber Optic Splice Vaults 875
639 Electrical Power Service Assemblies 878
641 Prestressed Concrete Poles 882
646 Aluminum Poles, Pedestals, and Posts 885
649 Galvanized Steel Poles, Mast Arms and Monotube Assemblies 888
650 Vehicular Traffic Signal Assemblies 894
653 Pedestrian Signal Assemblies 897
654 Midblock Crosswalk Enhancement Assemblies 898
659 Mast Arm, Span Wire, and Pole Mounting Assemblies 900
660 Vehicle Detection System 902
663 Signal Priority and Preemption Systems 910
665 Pedestrian Detection System 911
670 Traffic Controller Assemblies 913
671 Traffic Controllers 914
676 Traffic Cabinets 915
677 Equipment Shelter 918
678 Traffic Controller Accessories 923
680 System Control Equipment 924
682 Video Equipment 925
684 Network Devices 930
685 Traffic Control System Auxiliaries 934
695 Traffic Monitoring Site Equipment and Materials 936

SIGNING, PAVEMENT MARKING AND LIGHTING

700 Highway Signing 948
701 Profiled Thermoplastic Pavement Markings 960
704 Tubular Markers 964
705 Object Markers and Delineators 965
706 Raised Pavement Markers and Marker Adhesive 967
709 Two Reactive Components Pavement Markings 969
710 Painted Pavement Markings 972
711 Thermoplastic Pavement Markings 977
713 Permanent Tape Pavement Markings 982
714 Green-Colored Pavement Markings 985
715 Highway Lighting System 987

DIVISION III MATERIALS

AGGREGATES

901 Coarse Aggregate 993
902 Fine Aggregate 999

FLEXIBLE-PAVEMENT MATERIALS (INCLUDING MATERIALS FOR STABILIZING)

911 Base and Stabilized Base Materials 1003
914 Stabilization Materials 1006
916 Bituminous Materials 1007
917 Mineral Filler 1011
919 Ground Tire Rubber 1012

MATERIALS FOR PORTLAND CEMENT CONCRETE (STRUCTURAL, PAVEMENT, AND MISCELLANEOUS)

921 Portland Cement and Blended Cement 1014
923 Water for Concrete 1017
924 Admixtures for Concrete 1019
925 Curing Materials for Concrete 1022
926 Epoxy Compounds 1024
929 Supplementary Cementitious Materials 1029
930 Materials for Concrete Repair 1036

ACCESSORY MATERIALS FOR CONCRETE PAVEMENT AND CONCRETE STRUCTURES

931 Metal Accessory Materials for Concrete Pavement and Concrete Structures 1043
932 Nonmetallic Accessory Materials for Concrete Pavement ..... and Concrete Structures 1047
933 Prestressing Strand and Bar 1061
934 Non-Shrink Grout 1064
937 Post-Installed Anchor Systems for Structural Applications ..... in Concrete Elements 1066
938 Duct Filler for Post-Tensioned Structures 1068

DRAINAGE MATERIALS

942 Precast Concrete Pipe Gaskets 1071
943 Corrugated Steel Pipe and Pipe Arch (Including Underdrain) 1073
944 Structural Plate Steel Pipe and Pipe Arch 1076
945 Aluminum Pipe, Including Underdrain, Pipe Arch and..... Structural Plate Pipe and Pipe Arch 1078
946 Cast Iron Pipe 1080
948 Optional Drainage Products and Liner Repair Systems 1081
949 Miscellaneous Components for Manholes, Inlets and Other Structures 1091

TIMBER PRODUCTS AND MATERIALS

951 Inspection of Timber Products 1092
952 Structural Timber 1093
953 Timber Piling (Including Timber Sheet Piling) 1094
954 Timber Fence Posts and Braces 1096
955 Timber Treatment (Including Treating Materials) 1098

METAL MATERIALS AND FABRICATION DETAILS FOR METAL ITEMS

960 Post-Tensioning Components 1102
962 Structural Steel and Miscellaneous Metal Items (Other than Aluminum) 1114
965 General Provisions for Aluminum Items (Including Welding) 1133
967 Components for Guardrail 1138

PAVEMENT MARKINGS, COATINGS, AND
RECYCLED MATERIAL (MISCELLANEOUS)

970 Materials for Raised Pavement Markers and Adhesive 1141
971 Pavement Marking Materials 1145
972 Recycled Plastic Products 1157
973 Fiber Reinforced Polymer (FRP) Composite Structural Shapes 1158
974 Surface Applications 1163
975 Structural Coating Materials 1169

EROSION CONTROL MATERIALS

981 Turf Materials 1176
982 Fertilizer 1178
983 Water for Grassing 1179
985 Geosynthetic Materials 1180
987 Soil Layer Materials 1186

TRAFFIC CONTROL MATERIALS

990 Temporary Traffic Control Device Materials 1187
991 Channelizing Device Materials 1201
992 Highway Lighting Materials 1203
993 Delineators 1213
994 Retroreflective and Nonreflective Sheeting and Sign Panel Fabrication 1215
995 Traffic Control Signal and Device Materials 1219
996 Intelligent Transportation System Device and Auxiliary Component Materials 1285
997 Traffic Monitoring Site Materials 1309

END OF SECTION P-100

ITEM P-632 ASPHALT PAVEMENT REJUVENATION

DESCRIPTION

632-1.1 This item shall consist of a rejuvenator properly proportioned, mixed, and spread on an asphalt pavement surface, including airport pavements serving small airplanes 12,500 lbs (5670 kg) or less, roads, and other general applications. The application of the rejuvenator shall be in accordance with these specifications and shall conform to the dimensions shown on the plans or as directed by the Resident Project Representative (RPR).

The term “rejuvenation product” will carry the same connotation as the term “rejuvenator” or “rejuvenator/sealer.” The term “rejuvenation product” will be used throughout this specification for the purpose of recognizing rejuvenation performance for each class of rejuvenation products.

632-1.2 ASPHALT PAVEMENT REJUVENATION. This item governs the application of an asphalt pavement rejuvenation product applied to a previously placed asphalt surface in accordance with these specifications, as shown on the plans, or as directed by the RPR. The purpose of this product is rejuvenation of the upper 3/8 inch (9 mm) of oxidized or otherwise aged asphalt binder without causing an unacceptable reduction in the friction characteristics (skid resistance) of the pavement section. Additionally, the rejuvenation product should not introduce unacceptable pavement distresses such as raveling, high temperature deformation (rutting), and loss of strength. The rejuvenation product should not contribute to accelerated deterioration of the pavement.

MATERIALS

632-2.1 REJUVENATION PRODUCT.

a. The rejuvenation product must be capable of achieving the minimum changes in the asphalt binder properties shown in Tables 1 or 2 after proper application and field exposure.

b. The binder extracted per ASTM D2172, Method A and recovered per ASTM D1856 or D5404 from samples of the upper 3/8 inch (9 mm) of the surface of the treated pavement must exhibit the percent decrease in absolute viscosity or complex viscosity and corresponding phase angle increase listed in Tables 1 or 2, when compared to the values from adjacent untreated samples from the same pavement in the prescribed timeframe.

c. The submittal must include, from previous projects, independent laboratory test results accredited by an American Association of State Highway Transportation Officials (AASHTO) Materials Reference Laboratory (AMRL). The test results should verify the ability of the proposed rejuvenation product to achieve the minimum changes in asphalt binder properties shown in Table 1 or 2.

Table 1. Asphalt Pavement Three (3) Years or Less in Age

Item	Property of Recovered Binder[2]	Requirement	Test Method
1	Absolute Viscosity $_{60°C}$, P	≥ 25% Decrease[2]	ASTM D2171
2a	Complex Modulus $_{60°C}$, G*		AASHTO T315
2b	Viscosity $_{60°C}$, η = G* / ώ Pa·s		
2c	Phase Angle $_{60°C}$, δ,°	Report	

Table 2. Asphalt Pavement More than Three (3) Years in Age

Item	Property of Recovered Binder [2]	Requirement	Test Method
1	Absolute Viscosity $_{60°C}$, P	≥ 40% Decrease [2]	ASTM D2171
2a	Complex Modulus $_{60°C}$, G*, kPa		AASHTO T315
2b	Viscosity $_{60°C}$, η* = G* / ώ Pa·s		
2c	Phase Angle $_{60°C}$, δ,°	Report	

[2] Procedures: Sample collection for application and acceptance as noted in this specification. Sample weights and measure by ASTM D3549; Extraction by: ASTM D2172, Method A using toluene (conditioning to remove moisture will not be accomplished); Recovery by: ASTM D1856 (Abson) or ASTM D5404 (Roto-Vap); and binder extraction, recovery and testing within 48 hours of obtaining pavement cores or equivalent surface area samples.

d. The Contractor shall provide a copy of the manufacturer's Certificate of Analysis (COA) for the emulsified asphalt delivered to the project. If the asphalt emulsion is diluted at other than the manufacturer's facility, the Contractor shall provide a supplemental COA from an independent laboratory verifying the asphalt emulsion properties.

The COA shall be provided to and approved by the RPR before the emulsified asphalt is applied. The furnishing of the vendor's certified test report for the asphalt material shall not be interpreted as a basis for final acceptance. The manufacturer's COA may be subject to verification by testing the material delivered for use on the project.

632-2.2 REJUVENATION DOCUMENTATION/CERTIFICATION.

a. Performance. The submittal must include documentation of previous use and test data conclusively demonstrating that the rejuvenation product has been used successfully for a period of two or more years by other user agencies; and that the asphalt rejuvenation product has been proven to perform in a manner equivalent to this specification, as demonstrated through field testing by/independent testing laboratory as to the required change in the recovered asphalt binder properties. Testing data must be submitted indicating such product performance from at least two projects representative of two different asphalt mix designs, each being tested for a minimum of two years to ensure reasonable longevity of the treatment, as well as product consistency. The performance documentation must be presented from a geographically similar climatic region of the United States as that for this project, for example, wet-warm, wet-cool, dry-warm, and dry-cool, and contain data specified in paragraph 632-2.1.c.

b. Friction characteristics. Not required. **] [** The Contractor shall submit to the RPR friction tests, from previous airport projects which used the rejuvenation product in a similar environment, in accordance with AC 150/5320-12, at 40 mph (65 km/h) wet, showing, as a minimum; friction value of pavement surface prior to sealant application; two values, tested between 24 and 96 hours after application, with a minimum of 24 hours between tests; and one value tested at no less than 180 days or greater than 360 days after the application. The results of the two tests between 24 and 96 hours shall indicate friction is increasing at a rate to obtain similar friction value of the pavement surface prior to application, and the long-term test shall indicate no apparent adverse effect with time relative to friction values and existing pavement surface. The Contractor shall submit to the RPR a list of airports which meet the above requirements, as well as technical details on application rates, aggregate rates, and point of contact at these airports to confirm use and success of sealer. Friction tests shall be submitted from no less than one of the airports on the list and each set of tests described above, must be from one project.

Submittals without the required friction performance will not be approved. Friction tests performed on this project cannot be used as a substitute of this requirement.

c. Health, safety, and environment. The Contractor must provide a complete Safety Data Sheet (SDS) in accordance with U.S. Department of Labor, Occupational Safety and Health Administration (OSHA), Regulations (Standards – 29 CFR), 1910.1200 which establishes the requirement and minimum information for the SDS for hazardous materials. The SDS, Section II, shall include the Chemical Abstracts Service (CAS) registry numbers for all applicable hazardous ingredients in the rejuvenation product. The Contractor must provide the manufacturer's certification that the rejuvenation product complies with the Code of Federal Regulation (CFR) Title 40 – Protection of Environment. The manufacturer's certification shall address compliance for Air Programs, Part 59, National Volatile Organic Compound Emission Standards for Consumer and Commercial Products (for the airport location) and Water Programs, Part 116, Designation of Hazardous Substances.

APPLICATION RATE

632-3.1 CONTROL AREAS AND CONTROL STRIPS. A qualified manufacturer's representative shall be present in the field to assist the Contractor in applying control areas and/or control strips to determine the appropriate application rate of the rejuvenation to be approved by the RPR.

The Contractor must place a series of test areas/sections at application rates as judged necessary by the manufacturer to establish the appropriate project application rates for the specific product. As a minimum, a test area/section is required for each different asphalt mix design identified in the project. Separate control strips by a minimum of 200 feet between sections. The same equipment and method of operation shall be utilized on the control area(s) and/or control strip(s) as will be utilized on the remainder of the work.

The Contractor must select test areas/sections to obtain pavement cores or saw cut "slabs" (equivalent surface area samples) in accordance with paragraph 632-6.3. The pavement cores or equivalent surface area samples must be taken after application of the rejuvenation control strips is fully cured. The pavement cores shall be tested in accordance with Table 1 or 2, Item 1 and Item 2a, paragraph 632-2.1 for the purpose of determining a recommendation for the rejuvenation product application rates. The Contractor is responsible for all sampling and testing associated with the control strips.

For runway and taxiway surfaces, the Contractor shall place control strips to determine skid resistance. The skid resistance of the existing pavement shall be determined for each test areas/section with a continuous friction measuring equipment (CFME). Test areas shall be a minimum of 300 feet (90 m) long by 12 feet (3.6 m) wide, or width of anticipated application, whichever is greater. The area to be tested will be located on a representative section of the pavement to receive the surface treatment designated by the RPR. The test areas/sections should be placed under similar field conditions as anticipated for the actual application. The skid resistance test after application shall be at approximately the same location as the test done on the existing pavement. The Contractor may begin testing the skid resistance of control strips after application of the asphalt surface treatment has fully cured. Aircraft shall not be permitted on the runway or taxiway control strips until such time as the Contractor validates that its surface friction meets the minimum friction levels in AC 150/5320-12, Table 3-2 when tested at speeds of 40 and 60 mph (65 and 95 km/h) wet with approved CFME.

Full production shall not begin without the RPR's approval of an appropriate application rate(s). Acceptable test areas/sections shall be paid for in accordance with paragraph 632-8.1. Any pavement test areas/sections damaged by the surface treatment shall be removed and replaced as directed by the RPR at the Contractor's expense.

632-3.2 APPROVAL. The Contractor and the RPR shall examine the control strips 24 hours after treatment to determine if the entire rejuvenation product has penetrated into the surface. Application rates that have not allowed full penetration into the pavement surface after 24 hours must not be permitted to be used for full production. The application rates for full production must be determined by the Contractor and approved by the RPR based on the Contractor's recommendation and observation of control strips and control strip data from paragraph 632-3.1.

CONSTRUCTION

632-4.1 WORKER SAFETY. The rejuvenation product must be handled with caution. The Contractor must obtain a SDS for the rejuvenation product and require workmen to follow the manufacturer's recommended safety precautions.

632-4.2 WEATHER LIMITATIONS. The rejuvenation product must be applied only when the existing surface is dry and the weather forecast is in accordance with the manufacturer's recommendations for application and curing. The rejuvenation product must not be applied during inclement weather or when rain or freezing temperatures are anticipated within 24 hours before or after application. If weather conditions interfere with application and/or curing, the RPR may at his discretion suspend the job or require remedial action as deemed necessary.

During application, account for wind drift. Cover existing buildings, structures, runway edge lights, taxiway edge lights, informational signs, retro-reflective marking and in-pavement duct markers as necessary to protect against overspray before applying the rejuvenation product. Should the rejuvenation product get on any light or marker fixture, promptly clean the fixture. If cleaning is not satisfactory to the RPR, the Contractor shall replace any light, sign or marker with equivalent equipment at no cost to the Owner.

632-4.3 EQUIPMENT. The Contractor must furnish all equipment and hardware necessary for the performance of the work. The rejuvenation product should be delivered in dedicated tankers and/or containers with agitating equipment and filters, per manufacturer's recommendations. The

distributor must be designed and equipped in accordance with the manufacturer's recommendations, but include as a minimum, the following characteristics:

a. Adequate heating capability for rapid heating of the rejuvenator to the proper application temperature.

b. A positive displacement pump capable of pumping low viscosity material and providing a preselected constant pressure to deliver the specified rates of application.

c. A full circulation spray bar and applicator that maintain proper nozzles, which provide the specified rate of application.

d. A hooded spray bar and applicator that maintain proper nozzle height.

e. A positive shut-off for the spray bar and a hand spray (with hose) equipped with a positive shut-off at the spray gun.

f. A thermometer installed in the distributor tank to measure the temperature of the rejuvenation product at the time of the application.

g. A speedometer calibrated to a minimum of tenths of miles per hour.

h. A chart listing the capacity of the tank (in gallons (liters)) for each one inch (25 mm) of depth. A chart showing speed/pressure application rates must also be included.

632-4.4 PREPARATION OF ASPHALT PAVEMENT SURFACES. Clean pavement surface immediately prior to placing the seal coat so that it is free of dust, dirt, grease, vegetation, oil or any type of objectionable surface film. Remove oil or grease from the asphalt pavement by scrubbing with a detergent, washing thoroughly with clean water, and treating these areas with the oil spot primer. Any additional surface preparation, such as crack repair, shall be in accordance with P101-3.6.

632-4.5 APPLICATION OF REJUVENATION PRODUCT.

a. Following preparation and subsequent inspection of the surface and consideration for skid resistance, the rejuvenation product shall be uniformly applied over the surface to be treated at the approved rate with an allowable variation from the approved rate of application of ±5%, in accordance with ASTM D2995.

b. Materials shall be applied at the temperature recommended by the manufacturer.

c. Other rejuvenation product application procedures include:

(1) Calibration test. Contractor must furnish all equipment, materials, and labor necessary to calibrate the asphalt distributor or other application equipment. Calibration must be made with approved job material and prior to applying the rejuvenation product to the prepared surface. Calibration of the asphalt distributor and the specialized asphalt spray applicator must be in accordance with ASTM D2995.

(2) Excess rejuvenation product removal. Manufactured sand, as approved by the RPR, must be provided by the Contractor at no additional costs and must be spread in sufficient quantity to effectively blot up any excess rejuvenation product remaining on the treated pavement surface after 24 hours at no additional costs.

(3) Ponding and puddling of rejuvenation product. If low spots and depressions in the pavement surface cause ponding or puddling of the rejuvenation product, the pavement surface must be broomed with a broom drag. Brooming should continue until the pavement surface is free of any pools of excess material. Ponding and/or puddling must not cause excess pavement softening and/or additional distress. The RPR must inspect and approve areas after “brooming.”

(4) Excess runoff of rejuvenation product. The application rate should be reduced, and the RPR notified, if the surface grade of the pavement surface causes excessive runoff of the rejuvenation product. Additional rejuvenation product, if necessary, may be subsequently applied after the first application of material has penetrated into the pavement to achieve the required properties of the treated binder

(5) Insufficient rejuvenation product. When it is determined by the RPR that the actual application rate of the rejuvenation product is more than 5% below the approved application rate, subsequent applications of materials must be made to bring the actual application rate up to the approved rate; additional rejuvenation product must penetrate into the pavement surface within 24 hours after application. Multiple applications may be required at the discretion of the RPR, requiring additional pavement sampling and rejuvenation testing to assure compliance with Table 1 or 2 of paragraph 632-2.1.

632-4.6 CURE TIME REMEDIAL OPTION – APPLICATION OF SAND.

a. The Contractor must apply sand to the surface of the treated asphalt pavement if the rejuvenation product does not meet the cure time requirement and/or the frictional characteristics (skid resistance) have been reduced to an unacceptable level. An unacceptable level of frictional characteristics (skid resistance) is defined in paragraph 632-6.6.

b. The manufactured sand must be dry, hard, durable, free from clay, salt and foreign matter and well graded (100% passing #8 (2.36 mm) sieve and less than 10% passing #200 (75 µm) sieve). The sand must be uniformly applied at a rate of 3.0 lb/yd^2 ±0.5 lb/yd^2, rolled (as recommended by the Contractor and accepted by the RPR) into the treated surface and any surplus removed with a power broom, or as directed by the RPR. The Contractor is responsible for all materials, equipment, and costs associated with the application of sand.

c. All manufactured sand or approved substitute used during the treatment must be removed from the airport as soon as practical after treatment of a pavement and prior to opening any airfield runway, taxiway, etc. This should be accomplished by a combination of hand and mechanical sweeping. All turnouts must be cleaned of any sand to the satisfaction of the RPR. The Contractor is responsible for all materials, equipment, and costs associated with the application, removal and disposal of the sand.

d. If, after sand is swept and in the opinion of the RPR, a hazardous condition exists on the pavement, the Contractor must apply additional sand and sweep same immediately following reapplication. No additional compensation will be allowed for reapplication and removal of sand.

QUALITY CONTROL (QC)

632-5.1 MANUFACTURER REPRESENTATION. The Contractor must have a manufacturer's authorized representative on the job site at the beginning of the work and during all rejuvenation product application. The manufacturer's representative must have knowledge of the material, procedures, and equipment described in the specification and will be responsible for determining the application rates and must oversee the preparation and application of the rejuvenation product. Documentation of the manufacturer representative's experience and knowledge for applying the rejuvenation product must be furnished to the RPR a minimum of 10 work days prior to placement of the control strips. The cost of the manufacturer's representative will be included in the bid price.

632-5.2 QC PLAN. The Contractor must submit a QC plan to the RPR a minimum of 10 days prior to applying control strips in accordance with paragraph 632-3.1. The QC plan must address all items that affect the quality of the rejuvenation application including, but not limited to:

a. Qualifications of personnel.

b. Schedule for the project.

c. Procedure to monitor the weather/temperature limitations.

d. Inspection requirements including rejuvenation product, control strips, storage of rejuvenation product, preparation of the pavement surface, and equipment calibration.

e. Provisions for obtaining, packaging and shipping acceptance samples and repair of the pavement.

f. Provisions for sample testing, testing laboratory name, location, accreditation, contact person, all contact information, testing requested, and report on information.

632-5.3 WARRANTY. The Contractor must provide a manufacturer's/applicator warranty that the treated pavement will retain the lower binder properties of Table 1 or 2, for a period of two (2) years from the date of treatment. For compliance with the warranty, the Owner may obtain cores and perform tests in accordance with REJUVENATION ACCEPTANCE. The Contractor must further warrant that from the date the rejuvenation product was applied, the material will not flake, peel, chip, spall, nor otherwise contribute to or accelerate the aging of the pavement. The Contractor must reapply the rejuvenation product, as necessary, or provide remedial actions at no cost to the Owner, and/or refund all payments at the Owner's discretion. The RPR must designate and record an area of no less than 10 square yard (8.36 m^2) of untreated and 10 square yards (8.36 m^2) of treated pavement as the control strips for warranty testing. In the event a pay reduction, or no payment, is enforced, the warranty is rescinded.

REJUVENATION ACCEPTANCE

632-6.1 PRODUCT SAMPLING. The Contractor will take samples of the rejuvenation product proposed for use upon delivery of each shipment in accordance with ASTM D140 and store in accordance with the SDS, Section VII for a period of at least six months after payment in

accordance with paragraph 632-8.1. Testing, as necessary, will be accomplished by the RPR to verify information provided by the SDS information.

632-6.2 FREIGHT AND WEIGH BILLS. The Contractor must furnish the RPR receipted bills when railroad shipments are made, and certified weigh bills when materials are received in any other manner, of the rejuvenation product used in the construction covered by the contract. The Contractor shall not remove rejuvenation product from the tank car or storage tank until the initial outage and temperature measurements have been taken by the RPR, nor shall the car or tank be released until the final outage has been taken by the RPR.

632-6.3 FIELD SAMPLING PROCEDURES. Sampling of the pavement sections to be treated must be performed before and after the pavement has been treated with the rejuvenation product. The Contractor will be responsible for obtaining all pavement core samples or equivalent surface area samples as approved by the RPR for testing. At the discretion and approval of the RPR, the before samples collected and tested for application may suffice for before samples for acceptance.

a. At each sampling location, three (3) cores or equivalent surface area samples of the untreated pavement must be taken before the rejuvenation product is placed and three (3) cores or equivalent surface area samples of the treated pavement after application of the rejuvenation product must be taken. The before and after cores must be taken in the same general area, at a minimum within the same paving lane and within one foot (30 cm) of each other. All pavement cores taken by the Contractor must be six (6) in in diameter. The Contractor must repair any sample holes resulting from the removal of asphalt concrete pavement cores or equivalent surface area samples (with suitable materials and methods as approved by the RPR) at no cost to the Owner.

b. The treated pavement cores or equivalent surface area samples must be taken 30-45 days after application of the rejuvenation product.

c. Both untreated and treated pavement cores or equivalent surface area samples must be performed for each 20,000 square yards (16723 m^2) or fractional part of pavement section per pavement plan or as required by the RPR. Material acceptance in accordance with paragraph 632-2.1, Table 1 or Table 2, will be based on the test results for each 20,000 square yards (16723 m^2) or fractional part of treated pavement section per pavement plan or as required by the RPR. Locations for untreated samples should be determined by the RPR on a random basis in accordance with the procedures contained in ASTM D3665 provided requirements of paragraph 632-6.3a can be satisfied for both untreated and treated samples.

d. Pavement core samples or equivalent surface areas samples must be placed in labeled sealable plastic bags immediately after taking, cleaning and removing sampling water (blotting). The sealed samples must then be placed in labeled plastic core canisters. For equivalent surface area samples, an equivalent processing for the sample is required as approved by the RPR. The specimens must be shipped to the designated laboratory within 24 hours of collection.

632-6.4 REJUVENATION QUALITY ASSURANCE TESTING RESPONSIBILITY. Quality assurance testing organizations performing these acceptance tests shall be accredited in accordance with ASTM D3666. The quality assurance laboratory accreditation must be current and listed on the accrediting authority's website.

632-6.5 REJUVENATION QUALITY ASSURANCE TESTING. All acceptance testing necessary to determine conformance with this specification must be submitted to the RPR verifying that the rejuvenation product achieves the minimum decrease in the asphalt binder properties as measured from binder in the top 3/8 ±1/32 inch (9 mm ±1 mm) of the samples.

a. Extract the asphalt binder from the top 3/8 ±1/32 inch (9 mm ±1 mm) of the cores/slabs precisely cut from the field specimens. Binder extraction must be by ASTM D2172, Method A (centrifuge) with toluene, and recovered according to ASTM D1856 (Abson Method) or ASTM D5404 (Roto-Vap Method).

(1) Viscosity of the asphalt material must be measured in accordance with ASTM D2171. The percent decrease in the binder properties must be computed as follows:

100 (absolute viscosity, P, of untreated sample) – (absolute viscosity, P, of treated sample) / (absolute viscosity, P, of untreated samples)

(2) The complex modulus, G*, kPa, must be measured in accordance with AASHTO T315 C, at 140°F (60°C) 10 rad/sec or other recorded frequency. The percent decrease in the binder properties must be computed as follows:

100 (complex modulus, G*, kPa of untreated sample) – (complex modulus, G*, kPa, of treated sample) / (complex modulus, G*, kPa, of untreated samples)

(3) The complex viscosity, η*, at 140°F (60°C) must be calculated and reported from the complex modulus, G* and angular frequency, ώ (radians/sec).

b. Test results for absolute viscosity, complex modulus (and viscosity), and phase angle must be reported. The maximum percent reduction calculated for absolute viscosity or complex modulus must be considered in BASIS OF PAYMENT.

c. In the event of binders recovered from aged pavements and/or pavements using polymer modified binders (before treatment) exhibiting absolute viscosities ≥ 200,000 P (data becomes suspect, viscosity exceeds test capabilities) the viscosity reduction compliance requirement should be determined based on the complex modulus, G*, kPa.

632-6.6 SKID RESISTANCE. Special attention must be afforded to skid resistance based on the use of the pavement surfaces. The skid resistance of surfaces must be inspected by the Contractor and RPR a minimum of forty-eight (48) hours after application of the rejuvenation product. In the event either the Contractor or the RPR has concern on the skid resistance of these surfaces, the Contractor must exercise paragraph 632-4.6, Cure Time Remedial Option – Application of Sand, to the satisfaction of the RPR.

Friction tests in accordance with AC 150/5320-12, Measurement, Construction, and Maintenance of Skid-Resistant Airport Pavement Surfaces, shall be accomplished on all runways and taxiways that have received a rejuvenator application. Each test includes performing friction tests at 40 mph and 60 mph (65 or 95 km/h) both wet, 15 feet (4.5 m) to each side of runway centerline with approved continuous friction measuring equipment (CFME). A control friction test shall be run within 30 days prior to application of the rejuvenator to runway and another friction test shall be run after application of the rejuvenator to the entire project. The Contractor shall schedule testing

with the RPR and the RPR shall be present for testing. The Contractor shall provide the RPR a written report of friction test results.

Prior to opening the pavement to aircraft operations, the pavement friction evaluation must be equal or greater than the minimum levels provided in Table 3-2, “Friction Level Classification for Runway Pavement Surfaces,” in AC 150/5320-12, Measurement, Construction, and Maintenance of Skid-resistant Airport Pavement Surfaces, when tested at speeds of 40 and 60 mph (65 and 95 km/h) with approved continuous friction measuring equipment (CFME).

METHOD OF MEASUREMENT

632-7.1. **ASPHALT REJUVENATION.** The quantity of rejuvenation product to be paid for will be the number of square feet performed in accordance with the plans and specifications and accepted by the RPR. The Contractor must furnish the RPR with the certified weigh bills when materials are received for the rejuvenation product used under this contract. The Contractor must not remove material from the tank car or storage tank until initial amounts and temperature measurements have been verified.

632-7.2 FRICTION TESTS. Not required.

BASIS OF PAYMENT

632-8.1 PAYMENT FOR REJUVENATION PRODUCT. Payment for accepted rejuvenation product will be made at the contract unit price per square foot for asphalt rejuvenation adjusted according to paragraph 632-8.1.a.

a. Basis of adjusted payment. The payment for accepted rejuvenation product must be calculated in accordance with Table 3.

Table 3. Rejuvenation Pay Reduction

Binder Rejuvenation at Acceptance % Reduction in Absolute Viscosity or Complex Modulus		**% Payment**
Pavement More Than 3 Years in Age	**Pavement Less Than 3 Years in Age**	
≥ 40	≥ 25	100
30.0 - 39.9	20.0 - 24.9	75
Less than 30.0	Less than 20.0	No payment

a. Final payment. Final payment will not be made until rejuvenation success has been confirmed by acceptance testing. Final payment will be full compensation for furnishing all materials and for all labor, equipment, tools, and incidentals necessary to complete the item.

Payment will be made under:

Item P-632: Seal-Coat/Rejuvenate Existing Parking Lot Asphalt Pavement – per Square Foot

REFERENCES

The publications listed below form a part of this specification to the extent referenced. The publications are referred to within the text by the basic designation only.

ASTM International (ASTM)

ASTM D140	Standard Practice for Sampling Bituminous Materials
ASTM D1856	Standard Test Method for Recovery of Asphalt from Solution by Abson Method
ASTM D2171	Standard Test Method for Viscosity of Asphalts by Vacuum Capillary Viscometer
ASTM D2172	Standard Test Methods for Quantitative Extraction of Bitumen from Bituminous Paving Mixtures
ASTM D2995	Standard Practice for Estimating Application Rate of Bituminous Distributors
ASTM D3549	Standard Test Method for Thickness or Height of Compacted Bituminous Paving Mixture Specimens
ASTM D3665	Standard Practice for Random Sampling of Construction Materials
ASTM D3666	Standard Specification for Minimum Requirements for Agencies Testing and Inspecting Road and Paving Materials
ASTM D5340	Standard Test Method for Airport Pavement Condition Index Surveys
ASTM D5404	Standard Practice for Recovery of Asphalt from Solution Using the Rotary Evaporator

American Association of State Highway and Transportation Officials (AASHTO)

AASHTO T315	Standard Method of Test for Determining the Rheological Properties of Asphalt Binder Using a Dynamic Shear Rheometer (DSR)

Advisory Circulars (ACs)

AC 150/5320-12	Measurement, Construction, and Maintenance of Skid-Resistant Airport Pavement Surfaces

Code of Federal Regulations (CFR)

29 CFR Part 1910.1200	Hazard Communication
40 CFR	Protection of the Environment

END OF ITEM P-632

ITEM F-162 CHAIN-LINK FENCE

DESCRIPTION

162-1.1 This item shall consist of furnishing and erecting a chain-link fence in accordance with these specifications, the details shown on the plans, and in conformity with the lines and grades shown on the plans or established by the RPR.

MATERIALS

162-2.1 FABRIC. The fabric shall be woven with a 9-gauge galvanized steel wire in a 2-inch (50 mm) mesh and shall meet the requirements of ASTM A392, Class 2.

162-2.2 BARBED WIRE. Barbed wire shall be 2-strand 12-1/2 gauge zinc-coated wire with 4-point barbs and shall conform to the requirements of ASTM A121, Class 3, Chain Link Fence Grade.

162-2.3 POSTS, RAILS, AND BRACES. Line posts, rails, and braces shall conform to the requirements of ASTM F1043 or ASTM F1083 as follows:

- Galvanized tubular steel pipe shall conform to the requirements of Group IA, (Schedule 40) coatings conforming to Type A, or Group IC (High Strength Pipe), External coating Type B, and internal coating Type B or D.

- Roll Formed Steel Shapes (C-Sections) shall conform to the requirements of Group IIA, and be galvanized in accordance with the requirements of ASTM F1043, Type A.

- Hot-Rolled Shapes (H Beams) shall meet the requirements of Group III, and be galvanized in accordance with the requirements of ASTM F1043, Type A.

The dimensions of the posts, rails, and braces shall be in accordance with Tables I through VI of Federal Specification RR-F-191/3.

162-2.4 GATES. Gate frames shall consist of galvanized steel pipe and shall conform to the specifications for the same material under paragraph 162-2.3. The fabric shall be of the same type material as used in the fence.

162-2.5 WIRE TIES AND TENSION WIRES. Wire ties for use in conjunction with a given type of fabric shall be of the same material and coating weight identified with the fabric type. Tension wire shall be 7-gauge marcelled steel wire with the same coating as the fabric type and shall conform to ASTM A824.

All material shall conform to Federal Specification RR-F-191/4.

162-2.6 MISCELLANEOUS FITTINGS AND HARDWARE. Miscellaneous steel fittings and hardware for use with zinc-coated steel fabric shall be of commercial grade steel or better quality, wrought or cast as appropriate to the article, and sufficient in strength to provide a balanced design when used in conjunction with fabric posts, and wires of the quality specified herein. All

steel fittings and hardware shall be protected with a zinc coating applied in conformance with ASTM A153. Barbed wire support arms shall withstand a load of 250 pounds (113 kg) applied vertically to the outermost end of the arm.

162-2.7 CONCRETE. Concrete shall have a minimum 28-day compressive strength of 3000 psi (2670 kPa).

162-2.8 MARKING. Each roll of fabric shall carry a tag showing the kind of base metal (steel, aluminum, or aluminum alloy number), kind of coating, the gauge of the wire, the length of fencing in the roll, and the name of the manufacturer. Posts, wire, and other fittings shall be identified as to manufacturer, kind of base metal (steel, aluminum, or aluminum alloy number), and kind of coating.

CONSTRUCTION METHODS

162-3.1 GENERAL. The fence shall be constructed in accordance with the details on the plans and as specified here using new materials. All work shall be performed in a workmanlike manner satisfactory to the RPR. The Contractor shall layout the fence line based on the plans. The Contractor shall span the opening below the fence with barbed wire at all locations where it is not practical to conform the fence to the general contour of the ground surface because of natural or manmade features such as drainage ditches. The new fence shall be permanently tied to the terminals of existing fences as shown on the plans. The Contractor shall stake down the woven wire fence at several points between posts as shown on the plans.

The Contractor shall arrange the work so that construction of the new fence will immediately follow the removal of existing fences. The length of unfenced section at any time shall not exceed 300 feet (90 m). The work shall progress in this manner and at the close of the working day the newly constructed fence shall be tied to the existing fence.

162-3.2 CLEARING FENCE LINE. Clearing shall consist of the removal of all stumps, brush, rocks, trees, or other obstructions that will interfere with proper construction of the fence. Stumps within the cleared area of the fence shall be grubbed or excavated. The bottom of the fence shall be placed a uniform distance above ground, as specified in the plans. When shown on the plans or as directed by the RPR, the existing fences which interfere with the new fence location shall be removed by the Contractor as a part of the construction work unless such removal is listed as a separate item in the bid schedule. All holes remaining after post and stump removal shall be refilled with suitable soil, gravel, or other suitable material and compacted with tampers.

The cost of removing and disposing of the material shall not constitute a pay item and shall be considered incidental to fence construction.

162-3.3 INSTALLING POSTS. All posts shall be set in concrete at the required dimension and depth and at the spacing shown on the plans.

The concrete shall be thoroughly compacted around the posts by tamping or vibrating and shall have a smooth finish slightly higher than the ground and sloped to drain away from the posts. All posts shall be set plumb and to the required grade and alignment. No materials shall be installed on the posts, nor shall the posts be disturbed in any manner within seven (7) days after the individual post footing is completed.

Should rock be encountered at a depth less than the planned footing depth, a hole 2 inches (50 mm) larger than the greatest dimension of the posts shall be drilled to a depth of 12 inches (300 mm). After the posts are set, the remainder of the drilled hole shall be filled with grout, composed of one part Portland cement and two parts mortar sand. Any remaining space above the rock shall be filled with concrete in the manner described above.

In lieu of drilling, the rock may be excavated to the required footing depth. No extra compensation shall be made for rock excavation.

162-3.4 INSTALLING TOP RAILS. The top rail shall be continuous and shall pass through the post tops. The coupling used to join the top rail lengths shall allow for expansion.

162-3.5 INSTALLING BRACES. Horizontal brace rails, with diagonal truss rods and turnbuckles, shall be installed at all terminal posts.

162-3.6 INSTALLING FABRIC. The wire fabric shall be firmly attached to the posts and braced as shown on the plans. All wire shall be stretched taut and shall be installed to the required elevations. The fence shall generally follow the contour of the ground, with the bottom of the fence fabric no less than one inch (25 mm) or more than 4 inches (100 mm) from the ground surface. Grading shall be performed where necessary to provide a neat appearance.

At locations of small natural swales or drainage ditches and where it is not practical to have the fence conform to the general contour of the ground surface, longer posts may be used and multiple strands of barbed wire stretched to span the opening below the fence. The vertical clearance between strands of barbed wire shall be 6 inches (150 mm) or less.

162-3.7 ELECTRICAL GROUNDS. Electrical grounds shall be constructed at 500 feet (150 m) intervals**.** The ground shall be accomplished with a copper clad rod 8 feet (2.4 m) long and a minimum of 5/8 inches (16 mm) in diameter driven vertically until the top is 6 inches (150 mm) below the ground surface. A No. 6 solid copper conductor shall be clamped to the rod and to the fence in such a manner that each element of the fence is grounded. Installation of ground rods shall not constitute a pay item and shall be considered incidental to fence construction. The Contractor shall comply with FAA-STD-019, Lightning and Surge Protection, Grounding, Bonding and Shielding Requirements for Facilities and Electronic Equipment, paragraph 4.2.3.8, Lightning Protection for Fences and Gates, when fencing is adjacent to FAA facilities.

162-3.8 CLEANING UP. The Contractor shall remove from the vicinity of the completed work all tools, buildings, equipment, etc., used during construction. All disturbed areas shall be seeded per T-901.

METHOD OF MEASUREMENT & BASIS OF PAYMENT

162-4.1 Chain link fence is not proposed for repair or rehabilitation in this project. If fence should be damaged, or removed by the Contractor, at their discretion, the fence shall be replaced at no additional cost and new, repaired, or replaced fence shall meet the requirements of this specification.

REFERENCES

The publications listed below form a part of this specification to the extent referenced. The publications are referred to within the text by the basic designation only.

ASTM International (ASTM)

ASTM A121	Standard Specification for Metallic-Coated Carbon Steel Barbed Wire
ASTM A153	Standard Specification for Zinc Coating (Hot-Dip) on Iron and Steel Hardware
ASTM A392	Standard Specification for Zinc-Coated Steel Chain-Link Fence Fabric
ASTM A491	Standard Specification for Aluminum-Coated Steel Chain-Link Fence Fabric
ASTM A824	Standard Specification for Metallic-Coated Steel Marcelled Tension Wire for Use with Chain Link Fence
ASTM B117	Standard Practice for Operating Salt Spray (Fog) Apparatus
ASTM F668	Standard Specification for Polyvinyl Chloride (PVC), Polyolefin and other Organic Polymer Coated Steel Chain-Link Fence Fabric
ASTM F1043	Standard Specification for Strength and Protective Coatings on Steel Industrial Fence Framework
ASTM F1083	Standard Specification for Pipe, Steel, Hot-Dipped Zinc-Coated (Galvanized) Welded, for Fence Structures
ASTM F1183	Standard Specification for Aluminum Alloy Chain Link Fence Fabric
ASTM F1345	Standard Specification for Zinc 5% Aluminum-Mischmetal Alloy Coated Steel Chain-Link Fence Fabric
ASTM G152	Standard Practice for Operating Open Flame Carbon Arc Light Apparatus for Exposure of Nonmetallic Materials
ASTM G153	Standard Practice for Operating Enclosed Carbon Arc Light Apparatus for Exposure of Nonmetallic Materials
ASTM G154	Standard Practice for Operating Fluorescent Ultraviolet (UV) Lamp Apparatus for Exposure of Nonmetallic Materials
ASTM G155	Standard Practice for Operating Xenon Arc Light Apparatus for Exposure of Nonmetallic Materials

Federal Specifications (FED SPEC)

FED SPEC RR-F-191/3	Fencing, Wire and Post, Metal (Chain-Link Fence Posts, Top Rails and Braces)
FED SPEC RR-F-191/4	Fencing, Wire and Post, Metal (Chain-Link Fence Accessories)

FAA Standard

FAA-STD-019	Lightning and Surge Protection, Grounding, Bonding and Shielding Requirements for Facilities and Electronic Equipment

FAA Orders

5300.38	AIP Handbook

END OF ITEM F-162

ITEM T-904 SODDING

DESCRIPTION

904-1 This item shall consist of furnishing, hauling, and placing approved live sod on prepared areas in accordance with this specification at the locations shown on the plans or as directed by the RPR.

MATERIALS

904-2.1 SOD. Sod furnished by the Contractor shall have a good cover of living or growing grass. This shall be interpreted to include grass that is seasonally dormant during the cold or dry seasons and capable of renewing growth after the dormant period. All sod shall be obtained from areas where the soil is reasonably fertile and contains a high percentage of loamy topsoil. Sod shall be cut or stripped from living, thickly matted turf relatively free of weeds or other undesirable foreign plants, large stones, roots, or other materials that might be detrimental to the development of the sod or to future maintenance. At least 70% of the plants in the cut sod shall be composed of the species stated in the special provisions, and any vegetation more than 6 inches (150 mm) in height shall be mowed to a height of 3 inches (75 mm) or less before sod is lifted. Sod, including the soil containing the roots and the plant growth showing above, shall be cut uniformly to a thickness not less than that stated in the special provisions.

904-2.2 LIME. Not required.

904-2.3 FERTILIZER. Not required.

904-2.4 WATER. The water shall be sufficiently free from oil, acid, alkali, salt, or other harmful materials that would inhibit the growth of grass.

904-2.5 SOIL FOR REPAIRS. The soil for fill and topsoiling of areas to be repaired shall be at least of equal quality to that which exists in areas adjacent to the area to be repaired. The soil shall be relatively free from large stones, roots, stumps, or other materials that will interfere with subsequent sowing of seed, compacting, and establishing turf, and shall be approved by the RPR before being placed.

CONSTRUCTION METHODS

904-3.1 GENERAL. Areas to be solid, strip, or spot sodded shall be shown on the plans. Areas requiring special ground surface preparation such as tilling and those areas in a satisfactory condition that are to remain undisturbed shall also be shown on the plans.

Suitable equipment necessary for proper preparation of the ground surface and for the handling and placing of all required materials shall be on hand, in good condition, and shall be approved by the RPR before the various operations are started. The Contractor shall demonstrate to the RPR before starting the various operations that the application of required materials will be made at the specified rates.

904-3.2 PREPARING THE GROUND SURFACE. After grading of areas has been completed and before applying fertilizer and limestone, areas to be sodded shall be raked or otherwise cleared of stones larger than 2 inches (50 mm) in any diameter, sticks, stumps, and other debris which might interfere with sodding, growth of grasses, or subsequent maintenance of grass-covered areas. If any damage by erosion or other causes occurs after grading of areas and before beginning the application of fertilizer and ground limestone, the Contractor shall repair such damage. This may include filling gullies, smoothing irregularities, and repairing other incidental damage.

904-3.3 APPLYING FERTILIZER AND GROUND LIMESTONE. Following ground surface preparation, fertilizer shall be uniformly spread at a rate which will provide not less than the minimum quantity of each fertilizer ingredient, as stated in the special provisions. If use of ground limestone is required, it shall then be spread at a rate that will provide not less than the minimum quantity stated in the special provisions. These materials shall be incorporated into the soil to a depth of not less than 2 inches (50 mm) by discing, raking, or other suitable methods. Any stones larger than 2 inches (50 mm) in any diameter, large clods, roots, and other litter brought to the surface by this operation shall be removed.

904-3.4 OBTAINING AND DELIVERING SOD. After inspection and approval of the source of sod by the RPR, the sod shall be cut with approved sod cutters to such a thickness that after it has been transported and placed on the prepared bed, but before it has been compacted, it shall have a uniform thickness of not less than 2 inches (50 mm). Sod sections or strips shall be cut in uniform widths, not less than 10 inches (250 mm), and in lengths of not less than 18 inches (0.5 m), but of such length as may be readily lifted without breaking, tearing, or loss of soil. Where strips are required, the sod must be rolled without damage with the grass folded inside. The Contractor may be required to mow high grass before cutting sod.

The sod shall be transplanted within 24 hours from the time it is stripped, unless circumstances beyond the Contractor’s control make storing necessary. In such cases, sod shall be stacked, kept moist, and protected from exposure to the air and sun and shall be kept from freezing. Sod shall be cut and moved only when the soil moisture conditions are such that favorable results can be expected. Where the soil is too dry, approval to cut sod may be granted only after it has been watered sufficiently to moisten the soil to the depth the sod is to be cut.

904-3.5 LAYING SOD. Sodding shall be performed only during the seasons when satisfactory results can be expected. Frozen sod shall not be used and sod shall not be placed upon frozen soil. Sod may be transplanted during periods of drought with the approval of the RPR, provided the sod bed is watered to moisten the soil to a depth of at least 4 inches (100 mm) immediately prior to laying the sod.

The sod shall be moist and shall be placed on a moist earth bed. Pitch forks shall not be used to handle sod, and dumping from vehicles shall not be permitted. The sod shall be carefully placed by hand, edge to edge and with staggered joints, in rows at right angles to the slopes, commencing at the base of the area to be sodded and working upward. The sod shall immediately be pressed firmly into contact with the sod bed by tamping or rolling with approved equipment to provide a true and even surface, and ensure knitting without displacement of the sod or deformation of the surfaces of sodded areas. Where the sod may be displaced during sodding operations, the workmen, when replacing it, shall work from ladders or treaded planks to prevent further displacement. Screened soil of good quality shall be used to fill all cracks between sods. The quantity of the fill soil shall not cause smothering of the grass. Where the grades are such

that the flow of water will be from paved surfaces across sodded areas, the surface of the soil in the sod after compaction shall be set approximately one inch (25 mm) below the pavement edge. Where the flow will be over the sodded areas and onto the paved surfaces around manholes and inlets, the surface of the soil in the sod after compaction shall be placed flush with pavement edges.

On slopes steeper than one (1) vertical to 2-1/2 horizontal and in v-shaped or flat-bottom ditches or gutters, the sod shall be pegged with wooden pegs not less than 12 inches (300 mm) in length and have a cross-sectional area of not less than 3/4 sq inch (18 sq mm). The pegs shall be driven flush with the surface of the sod.

904-3.6 WATERING. Adequate water and watering equipment must be on hand before sodding begins, and sod shall be kept moist until it has become established and its continued growth assured. In all cases, watering shall be done in a manner that will avoid erosion from the application of excessive quantities and will avoid damage to the finished surface.

904-3.7 ESTABLISHING TURF. The Contractor shall provide general care for the sodded areas as soon as the sod has been laid and shall continue until final inspection and acceptance of the work. All sodded areas shall be protected against traffic or other use by warning signs or barricades approved by the RPR. The Contractor shall mow the sodded areas with approved mowing equipment, depending upon climatic and growth conditions and the needs for mowing specific areas. Weeds or other undesirable vegetation shall be mowed and the clippings raked and removed from the area.

904-3.8 REPAIRING. When the surface has become gullied or otherwise damaged during the period covered by this contract, the affected areas shall be repaired to re-establish the grade and the condition of the soil, as directed by the RPR, and shall then be sodded as specified in paragraph 904-3.5.

METHOD OF MEASUREMENT

904-4.1 This item shall be measured on the basis of the area in square yards (square meters) of the surface covered with sod and accepted.

BASIS OF PAYMENT

904-5.1 This item will be paid for on the basis of the contract unit price per square yard (square meter) for sodding, which price shall be full compensation for all labor, equipment, material, staking, and incidentals necessary to satisfactorily complete the items as specified.

Payment will be made under:

Item T-904	Sodding & Restoration - per Lump Sum

REFERENCES

The publications listed below form a part of this specification to the extent referenced. The publications are referred to within the text by the basic designation only.

ASTM International (ASTM)

ASTM C602 Standard Specification for Agricultural Liming Materials

Advisory Circulars (AC)

AC 150/5200-33 Hazardous Wildlife Attractants on or Near Airports

FAA/United States Department of Agriculture

Wildlife Hazard Management at Airports, A Manual for Airport Personnel

END OF ITEM T-904

ABBREVIATED DESIGN CRITERIA PACKAGE (ADCP)

CONFORMED DOCUMENTS FOR CONSTRUCTION

AVCON PROJECT #: 2026.0355.03

For

FLAGLER EXECUTIVE AIRPORT (FIN):

AIR TRAFFIC CONTROL TOWER REHABILITATION

201 Airport Road
Palm Coast, Florida 32164

JULY 24, 2026

Prepared By:

KMA Design Group, LLC.
P.O. Box 140201
Orlando, Florida 32814
(407) 810-2606

TABLE OF CONTENTS

Title Section	Pages
1. General Requirements	1-3
2. Structural Narrative	4-8
3. Architectural /Building Envelope Narrative	9-20
4. Mechanical Narrative	21-34
5. Electrical Narrative	35-41
6. Plumbing Narrative	42-43
7. Supplemental Product Specifications	APPENDIX A

GENERAL REQUIREMENTS

Existing Campus Background

The Flagler Executive Airport (FIN) is a county-owned, public use, general aviation airport operated and maintained under the Flagler County Board of County Commissioners. The airport accommodates more than 175,000 general aviation takeoffs and landings each year. There are no scheduled airlines providing service to the airport.

Located on the east side of Flagler County on State Road 100, the airport sits at the gateway to natural attractions, golf courses, and pristine beaches just four miles away. The airport comprises over 1,465 acres, bordering the City of Palm Coast. It is a towered field with two intersecting runways -- Runway 11-29 (5,500' x 100') and Runway 6-24 (5,000' x 100') -- and a water runway, Runway 18W-36W (3,000' x 500'), on Gore Lake within the airport property.

Existing Air Traffic Control Tower (ATCT)

The existing Air Traffic Control Tower is a seven (7) story facility of approximately 4,375 GSF and is a 25FT-by-25FT precast concrete structure (4-sided) with a 6-sided cab floor at the top for air traffic control crew members to observe the 360 degree view of the airport. Floors are poured concrete, exterior walls are painted concrete tilt-wall panels, and the roof is a trapezoidal panel, standing seam mansard metal roof system with a modified bitumen membrane roofing system over tapered insulation board system. Other features include laminated double glazing within a storefront frame around the cab level, a concrete catwalk (flush metal panel system over steel beams below) with galvanized steel guard railing and metal wall panels at the top of the cab.

Definitions

- Certified General Contractor (CGC): A Florida licensed General Contractor who has been certified in accordance with Florida Statutes, Section 489.
- Abbreviated Design Criteria Package (ADCP): The package of performance criteria, existing as-built drawings, and specifications to be used by the CGC to correct and construct the project, and as further defined under Florida Statutes, Section 287.055.
- Guaranteed Maximum Price (GMP): CGC final contract price to perform all work specified in this ADCP.

CGC Requirements

- This project will be bid and awarded based on company qualifications and price. The selected CGC will bear full responsibility for any permitting requirements, construction and meeting all applicable Code requirements, Flagler Executive Airport Standards and Guidelines and Design Review Committee (DRC) requirements.
- During the performance of this contract, the CGC shall comply with all federal, state, and local environmental laws, regulations, policies, Flagler Executive Airport standards and other standards as required.
- The project shall retain the services of a CGC, licensed in the State of Florida, for the remedial efforts of the renovation. The CGC shall acquire material and products from reputable vendors and comply fully with the manufacturer’s recommendations, training, and installation and application instructions.
- During construction, the CGC shall keep an up-to-date annotated set of as-built drawings on site. At completion of the construction phase, original documents shall be updated/documented to the most current as-built condition and shall be provided to Flagler Executive Airport in CD or thumb drive format.
- The CGC shall be responsible for identifying and securing all necessary permits required for the project. The CGC shall pay for all required permit fees applicable to the project.

- CGC shall reference the existing as-built drawings (July 2008) to be provided by Flagler Executive Airport for reference to the original design intent as the ADCP shall indicate all known remedial requirements that were requested by Flagler Executive Airport.

Special Conditions

- The CGC shall be advised that the ATCT parking and other site areas will remain vacant and available to the CGC during the duration of the construction period. The CGC shall coordinate with Flagler Executive Airport to obtain direct access into the facility as required.
- For anyone accessing the site, the CGC must meet all Flagler Executive Airport security requirements and be properly badged or be escorted by a badged individual.

Existing Site Information

- The CGC shall be thoroughly familiar with all existing site conditions prior to construction. Investigate all existing site components and include any modifications, removal, or re-location necessary to accommodate the building façade renovations described herein.
- If necessary, temporary hook up of utilities shall be coordinated at a source location directed by Flagler Executive Airport. All temporary hook-ups and tie-ins shall comply with all local codes and requirements and shall be the responsibility of the CGC. All temporary tie-ins to the building water system shall be provided with proper backflow prevention devices.
- Vehicle parking for CGC personnel, subcontractors and other project-related vehicles and equipment is available on site.
- The CGC shall be responsible for any security measures, including fencing, required to secure their materials and protect members of the public from access to hazards during construction.
- CGC shall fence the area out of the Air Operations Area (AOA) and meet the Homeland Security requirements for fencing.
- In the event the CGC encounters on-site material believed to be hazardous material, such as asbestos or polychlorinated biphenyl (PCB), the CGC shall immediately stop work in the area affected and verbally report the condition to Flagler Executive Airport followed by notification in writing. The work in the affected area shall not thereafter be resumed except by written agreement between Flagler Executive Airport and the CGC if in fact the material is hazardous and has not been rendered harmless. The work in the affected area shall be resumed if the material is not hazardous, or if it has been rendered harmless, by the written agreement of Flagler Executive Airport and the CGC.
- The CGC shall follow the Airport requirements as indicated below regarding site-related procedures:
    - Interior – Cover and prep when working around any and all equipment. The CGC shall not disrupt services, operations, or utilities without obtaining the Airport's approval and instruction in each case.
    - Exterior – The CGC shall always keep the premises free of accumulation of waste materials or rubbish caused by his operations or the operations of any other subcontractors within the area of work. Methods for such removal must be agreeable to the Airport.
- The CGC shall comply with all the rules and regulations of the building as to hours of availability of elevators, loading areas, etc., for the purpose of delivery and the manner of handling materials, equipment, and debris, to avoid conflict or interference with normal building operations. After-hours work shall be coordinated with the Airport Director.

Existing Utilities

The CGC shall provide any utility service modifications necessary to accomplish the work. The names and points of contact for the utilities at the Airport consisting of FAA, Flagler Executive Airport and local utility companies shall be provided and shared between all stakeholders.

Validity of Information Provided

The CGC will, at their own expense, verify and accept as their own, all information provided by Flagler Executive Airport. In addition, the CGC shall provide any additional items that may be further required and need remedial efforts, etc., that are necessary to supplement the available information to provide a complete, professionally constructed project consistent with the intent of the ADCP.

Project Information

- Project Location: The site for the project is located at 1050 Fin Way, Palm Coast, FL 32164; Flagler Executive Airport (FIN ATCT).
- Project Description: This project consists of providing remedial and corrective design intent for the ATCT through this ADCP (written narratives and supplemental specifications) for a CGC to build; all while referencing the original as-built drawings and specifications as no other construction documents are to be provided.
- There is no Leadership in Energy and Environmental Design (LEED) or Green Globe requirements, however, this project shall apply sustainability principles throughout the construction process.
- It is the intent of these project requirements that the CGC deliver to Flagler Executive Airport a complete, finished, and restored facility.
- Materials shall be durable, permanent, vandal-resistant, easily maintained, and within the limits set by budget, function, and code.
- The local permitting agency with authority over this project is the Flagler County Building Department, 1769 E. Moody Blvd., Building 2, Bunnell, Florida 32110.

Warranties

General: The required final constructed product shall be a completely warranted and guaranteed project both in terms of materials provided and the installation, labor, equipment, tools, and methods used.

Products and Substitutions

A product proposed as an “equal” shall be such that all its salient characteristics conform to those of the initially proposed brand name product. These salient characteristics may include, but are not limited to:
design, function, size, quality, durability, color, style, texture, and other attributes which, given the nature of the project, may significantly affect its acceptability as a substitute for the listed product.

Certifications

Upon completion of the work, the CGC and their subcontractors shall certify the installation according to their recommendations and instructions and issue warranties and guarantees as a condition of project close-out and final payment.

STRUCTURAL

General Requirements

The air control tower structure was constructed with precast concrete wall panels. The cab was constructed with steel framing. The floor beams of the tower consisted of wide-flange steel beams that cantilevered off the main tower concrete walls to support the catwalk. The catwalk was constructed with galvanized steel deck and a reinforced concrete slab. The catwalk perimeter had steel guardrails.

Existing Conditions

The steel wide-flange beams that supported the perimeter of the catwalk, and the main support beams that cantilevered off the tower walls, had multiple areas that were severely corroded with section loss, delaminated steel, and were structurally compromised. The corrosion appeared generally limited to the area underneath the catwalk, as the steel framing underneath the tower was partially protected by spray-on fireproofing.

It is our opinion that the catwalk steel framing was in very poor condition and unsafe. All the steel framing extending outward from the tower will need to be removed and replaced. It is our recommendation that a different catwalk design be considered, consisting of aluminum beams bolted to the existing steel moment connections, fiberglass or aluminum structural grating, and aluminum guardrails. This design greatly lightens the dead load by eliminating the concrete slab, which will also reduce construction costs. Aluminum offers far superior resistance to corrosion than steel, and the open grating would allow water to freely drain and also allow for drying of the aluminum framing.

Scope of work items are listed in **RED**.



Photo #1: Aerial view of the tower and arrow indicating the northeast corner. Reference Photo #2.



Photo #2: Reference Photo #1. View of the northeast corner of the top of the tower concrete walls. The concrete was cracked and spalled. **Remove all cracked, spalled, and unsound concrete and inspect rebar for corrosion. Clean rebar and replace/repair as required. Replace concrete with approved patching compound by Sika or similar.**



Photo #3: Typical view of the steel framing along the perimeter of the catwalk. Steel was severely corroded throughout the perimeter of the catwalk and at multiple locations underneath the catwalk. **The entire catwalk is considered structurally unsound and beyond repair and will have to be completely replaced with a similar system, though we recommend consideration of aluminum framing.**



Photo #4: Typical view of a removed section of corroded and delaminated steel from the catwalk framing.



Photo #5: Typical view of the underside of the catwalk and the steel framing. The steel framing directly underneath the tower generally exhibited signs of minor corrosion, with some areas of more advanced corrosion. It appeared that spray-on fireproofing had protected much of the steel framing underneath the tower. **Clean off all corrosion with wire brush or other method and reinspect steel framing.**



Photo #6: View of the underside of the southwest corner of the catwalk and the steel framing. This condition was observed at several locations, where there was severe corrosion and delamination of the main support beams. **The cantilevered beams were bolted at the tower walls and appeared they could be removed and replaced with aluminum or steel, reference Photo #7.**



Photo #7: Reference Photo #6. It appeared the cantilevered support beam was connected underneath the tower via a moment connection. **The cantilevered beams were bolted at the tower walls and appeared they could be removed and replaced with aluminum or steel.**



Photo #8: Underside of the southwest catwalk, moderate level of corrosion observed on the steel framing on top of the tower walls. **Clean off all corrosion with wire brush or other method and reinspect steel framing. Relatively minor repairs such as welding on additional steel may be required.**



Photo #9: Underside of the northwest corner of the catwalk, moderate level of corrosion observed on the steel framing and deck. **Clean off all corrosion with wire brush or other method and reinspect steel deck. Relatively minor repairs such as welding on additional steel deck may be required, beam indicated by left arrow to be replaced.**

ARCHITECTURAL / BUILDING ENVELOPE

General Requirements

The project shall be constructed in accordance with the current editions of all applicable state and local codes, standards, design parameters, or regulations. In the event of conflict between codes, standards, or regulations, the most stringent requirement shall apply.

- 2023 Florida Building Code, 8th Edition
- 2023 Florida Building Code – Mechanical, 8th Edition
- 2020 National Electrical Code (NEC)
- 2023 Florida Fire Prevention Code
- 2021 Life Safety Code (NFPA 101) Florida
- UL, Inc. Fire Resistance Directory – Latest Edition
- Florida Department of Transportation (FDOT) Standards
- Federal. Aviation Administration (FAA)

Existing Conditions

Scope of work items are listed in **RED**.

ROOF:
The existing roof system on the Control Tower is a granule surfaced, modified bitumen roof system manufactured by Siplast. This roof system was installed over rigid insulation and a metal deck.

- **Remove and replace the existing roof system including insulation (install a new roof system using FiberTite XT 50 membrane over tapered insulation over 4" polysio roof insulation over a 1/2" coverboard).**
- **Install new drain strainers and inspect the clamping rings. Replace any broken drain clamping rings and tap any broken roof drain bolts. Replace new bolts with stainless steel fasteners.**
- **Install new lightning protection.**

PARAPET WALL PANELS:
The walls are metal framed structures covered with metal wall panels (front side and back side). Parapet tops are covered with coping metal, cleated in the front and a mechanically attached to the rear face.

- **Remove and replace metal wall panel system (backside only), using Pac-Clad (Flush Wall Panels). Final color to be selected by Owner from the standard choice options. The current exiting color close match would be "Slate Gray." Contractor shall maintain the metal plates for existing equipment connections with S.S. Unistrut.**
- **Remove and replace the existing metal coping.**
- **Retain the metal mansard panels outside the wall panels.**

ROOF TOP CURBS, HATCH, LADDER:
There are two air conditioner units mounted on the roof, the curbs are in fair condition. There is one access hatch to the cab roof area. The hatch should be replaced with a new one at the time of roofing.

- **Replace the roof hatch and ladder.**
- **Remove the HVAC curbs and install new curbs in coordination with the mechanical contractor.**

CATWALK:
The surrounding catwalk area is deteriorated and shows signs of corrosion and damage. The recommendation is:

- **Provide new aluminum beams bolted to the existing steel moment connections.**
- **Provide new aluminum structural grating and new aluminum decorative guardrails.**
- **Provide new catwalk access door with new door hardware and paint and replace metal panel(s) adjacent.**

EXTERIOR CONCRETE WALLS:

The exterior structure is a 7-story cast panel system. The concrete panels have been sealed with a urethane sealant that is beginning to age and craze. The concrete panels have been painted, and the paint is aging and in need of re-painting.

- **Cut out the old control joint sealant and backer rod. Install new backer rod and seal with DOWSIL 790 Sealant.**
- **Prep, prime, and paint the exterior precast concrete walls with DOWSIL ALLGUARD Silicone Elastomeric Coating.**
- **Replace both exterior hollow metal doors and door hardware. Paint new hollow metal doors and existing hollow metal frames.**

FIXED FRAME WINDOWS IN THE EXTERIOR CONCRETE WALL PANELS:

There are aluminum fixed framed windows in the Tilt-Wall panels. These windows appear to be functioning. The urethane sealant around the windows is beginning to crack and craze and in need of replacement.

- **Cut out the old sealant and install new Dowsil 795 sealant.**

WINDOWS AT THE TOP FLOOR OF THE CONTROL TOWER:

- **Remove all cracked/shrunken window gaskets.**
- **Clean all joints, removing all foreign matter and contaminants such as grease, oil, dust, water, frost, surface dirt, old sealants or glazing compounds and protective coatings.**
- **Install backing material or joint filler, setting blocks, spacer shims, and tapes. Mask areas adjacent to joints to ensure neat sealant lines. Primer is generally not required on nonporous surfaces but may be necessary for optimal sealing of certain porous surfaces. A test placement is always recommended. Apply DOWSIL™ 795 Silicone Building Sealant in a continuous operation using positive pressure. (The sealant can be applied using many types of air-operated guns and most types of bulk dispensing equipment.) Before a skin forms (typically within 15 minutes), tool the sealant with light pressure to spread the sealant against the backing material and joint surfaces. Remove masking tape as soon as the bead is tooled.**
- **Provide a 20-year manufacturer warranty.**
- **Provide Contractors' 5-year leak free warranty.**

EXTERIOR PAINT COLORS:

All colors shall be Sherwin Williams (Pro Industrial DTM Acrylic Coating). The colors shall be the following Basis of design:





Main Building: SW 7030 Anew Gray **Catwalk/Guardrail/H.M. Doors/Frames: SW 7068 Grizzle Gray**

***The contractor shall provide three (3) varying shades (tone on tone) of each color as listed above for "drawdowns" on the building for the airport director to see in full sunlight prior to making the final approved selection.**

INTERIOR REMEDIATION

- **Replace ACT/grid in the control tower cab area (black).**
- **Contractor shall replace the pull-down access ladder from the cab to the roof (B.O.D.: Louisville Ladder).**
- **Contractor to replace all carpet in the control tower cab.**
- **Contractor to paint the entire interior of the control tower cab and at the ground entry vestibule.**
- **Where the current countertop/break area is located within the control tower cab, contractor shall remove the existing countertop, sink, and support brackets and replace with new millwork (including countertop, lower cabinets and new sink with faucet and adjustable controls).**
- **At all new PTAC unit installations, contractor shall make sure the drywall is properly sealed/caulked to the unit and painted to match the wall color for each floor.**

ROOF:



Photo #10: Existing modified bitumen membrane system. **Replace with FiberTite XT 50 membrane.**

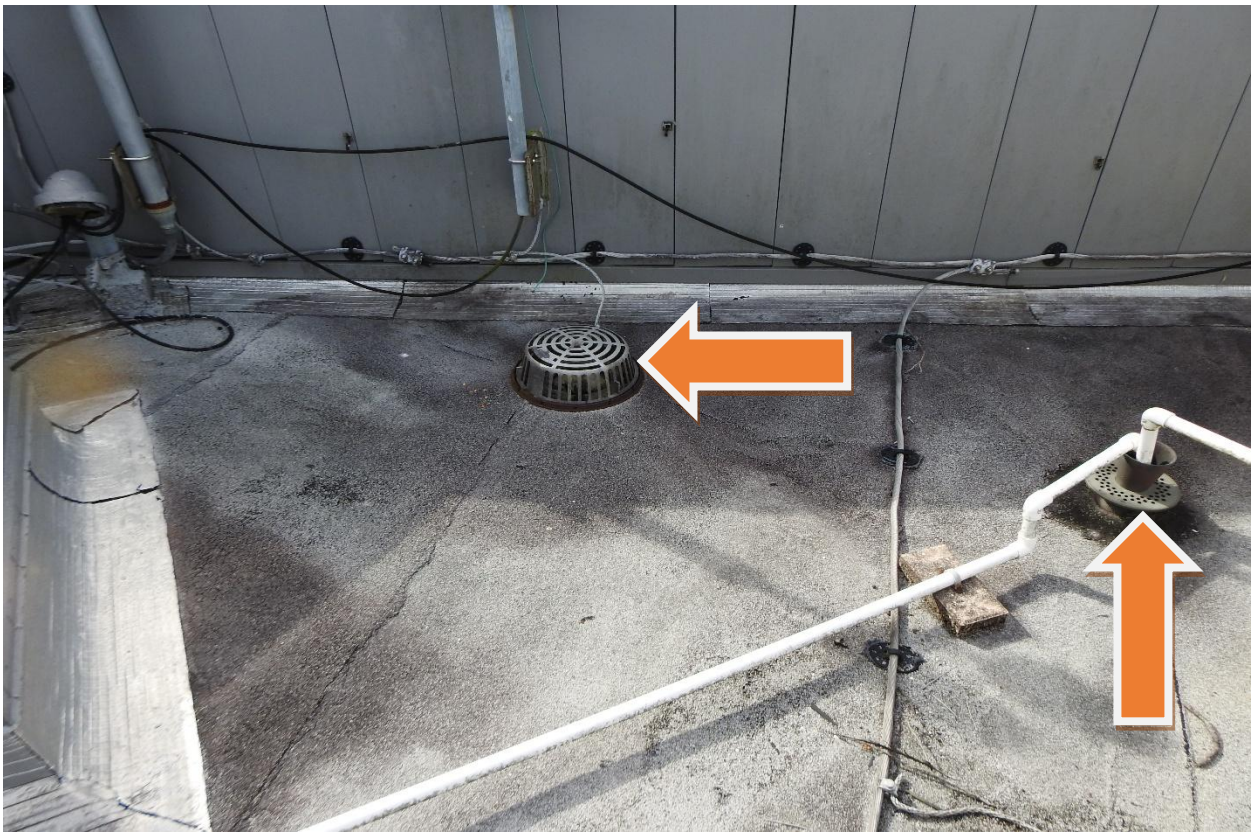

Photo #11: **Existing internal roof drain strainer to be replaced and reroute the RTU condensate piping below.**

PARAPET WALL:



Photo #12: **Remove the flush metal wall panel system in its entirety and replace them with new metal wall panels.**



Photo #13: **Remove and replace existing coping cap.**



Photo #14: Existing metal roof panel to remain.

ROOF TOP CURBS, HATCH, LADDER:



Photo #15: **Remove the existing HVAC curbs and install new curbs. Remove and replace the existing roof access hatch.**

CATWALK:

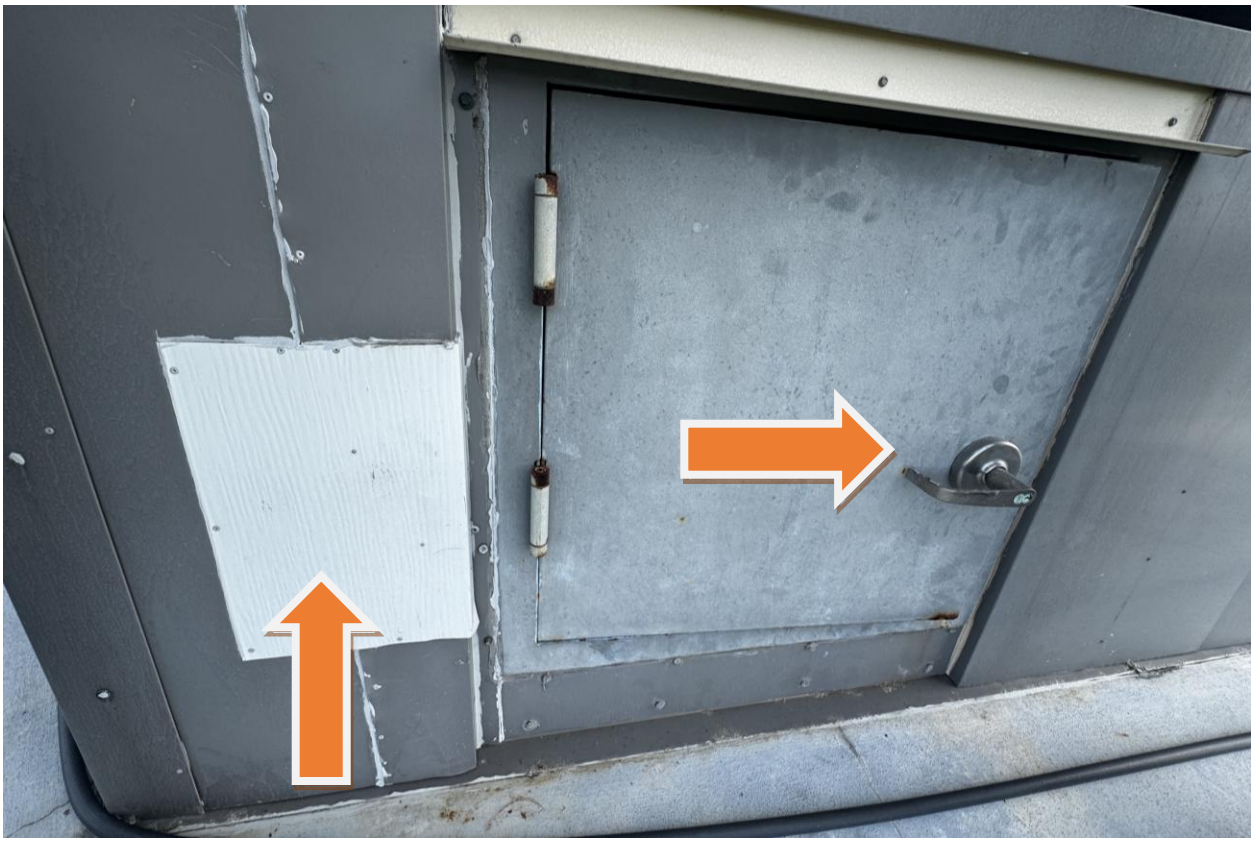

Photo #16: **Remove and replace catwalk access door, door hardware, and paint. Also remove and replace the adjacent metal wall panels to eliminate the seam and associated patchwork.**

EXTERIOR CONCRETE WALLS:



Photo #17: Existing stucco on the tilt-wall panel system reflects staining. **This shall be cleaned, primed, and painted.**



Photo #18: **Cut out and install new backer rod and seal with DOWSIL 790 Sealant.**



Photo #19: **Replace exterior hollow metal door and door hardware. Paint door and existing H.M. Frame.**

WINDOWS AT THE TOP FLOOR OF THE CONTROL TOWER:



Photo #20: **Remove and replace sealant with DOWSIL 795 Silicone at the cab windows.**

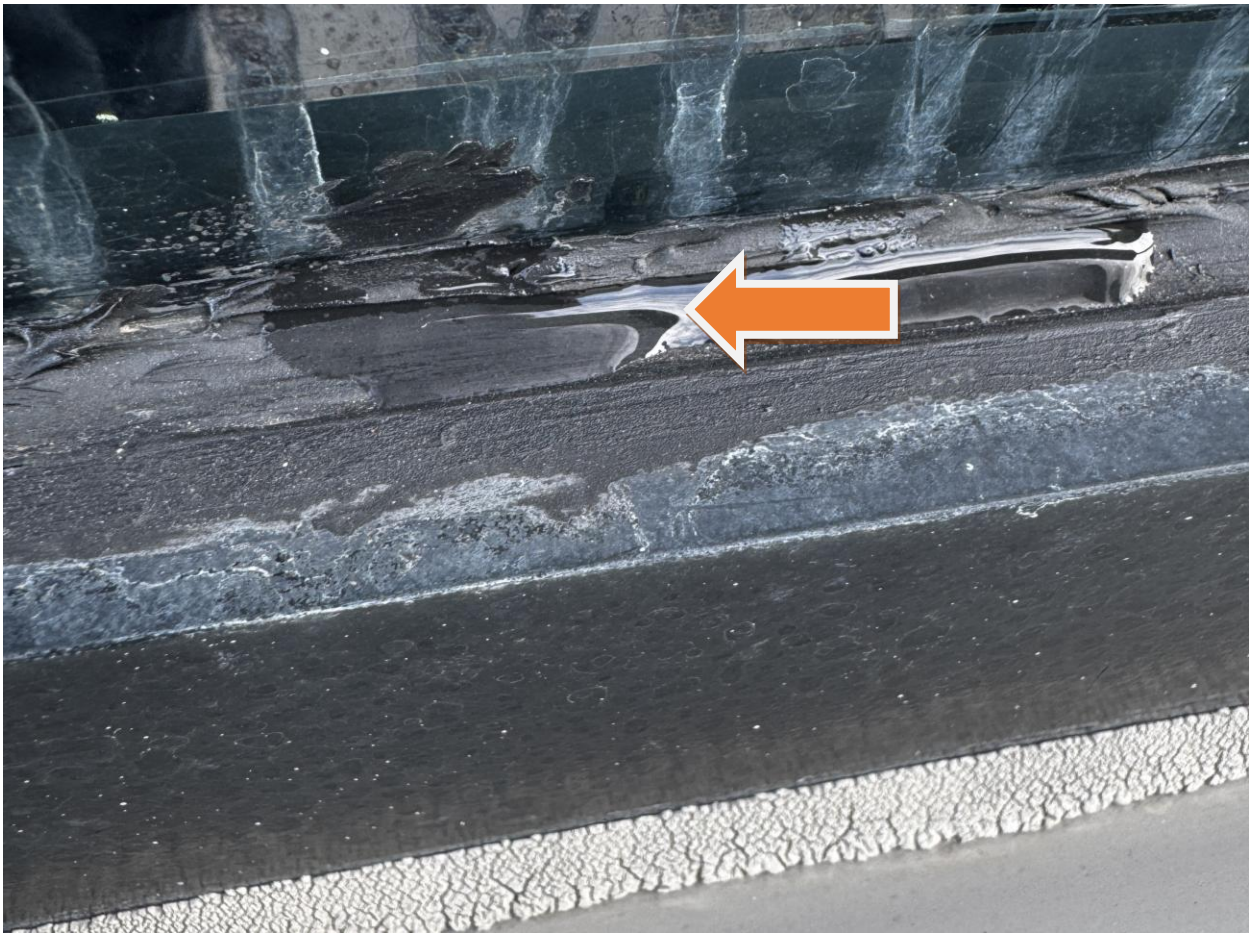

Photo #21: **Remove and replace sealant with DOWSIL 795 Silicone at the cab windows.**

INTERIOR REMEDIATION:



Photo #22: Existing access ladder is in poor condition. **Contractor shall replace one for one and install per Manufacturer's recommendations (B.O.D.: Louisville Ladder 7'-8" x 22.5" x 3" Insulated or similar to fit).**



Photo #23: **All existing ACT shall be removed and replaced with new ACT.**



Photo #24: **Existing carpet to be removed and replaced. Also, countertop, sink and support brackets are to be removed and replaced with new millwork (including countertop, lower cabinets, and new sink).**

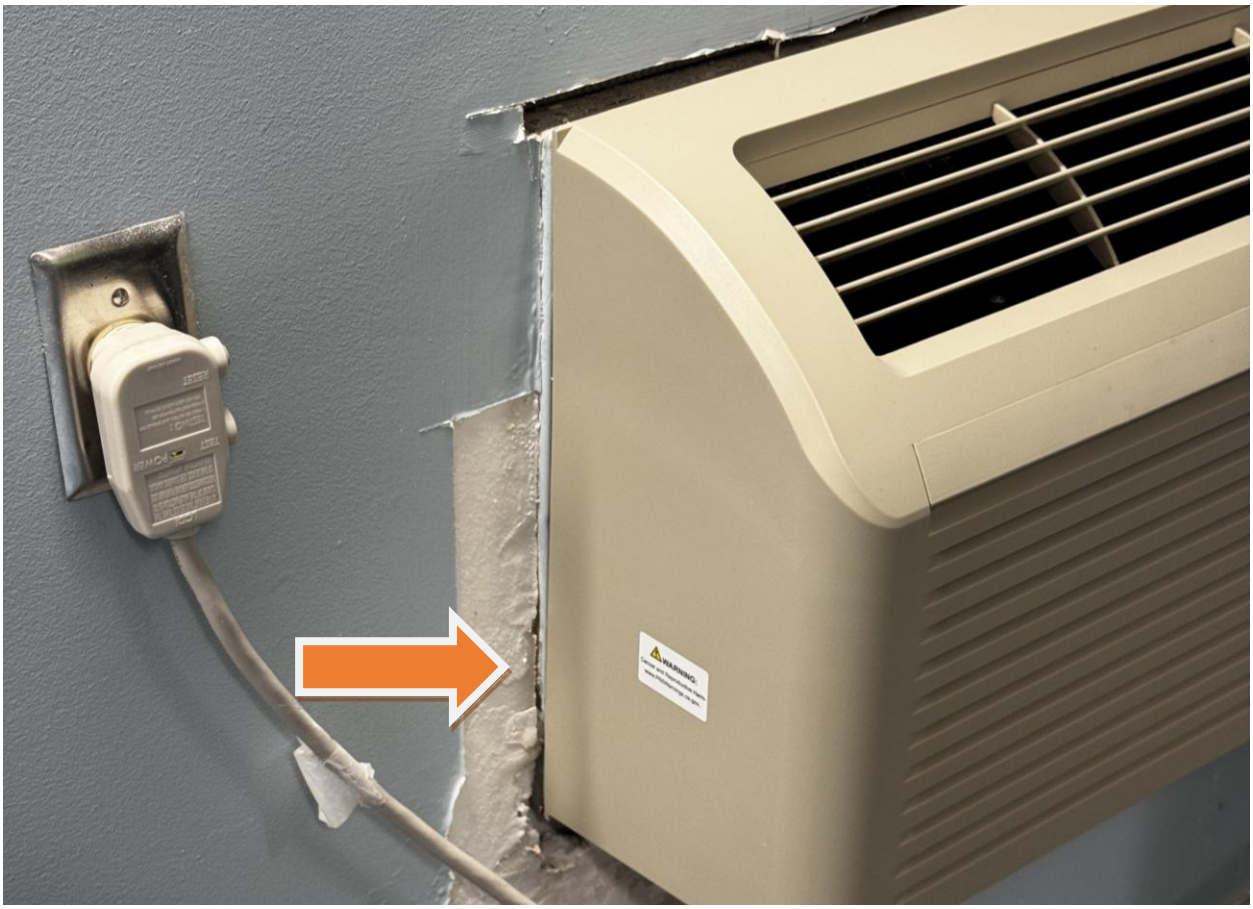

Photo #25: **At all new PTAC unit installations, contractor shall make sure the drywall is properly sealed/caulked to the unit and painted to match the wall color for each floor.**

Outline Specifications

Below are the following technical sections anticipated to be included in the scope of work for the project:

DIVISION 07: THERMAL & MOISTURE
07 01 91 - Joint Sealant Rehabilitation and Replacement (Basis of Design: DOWSIL™ 790 and DOWSIL™ 795 Silicone Building Sealant)
Refer to APPENDIX A for both.

DIVISION 9: FINISHES
09 50 00 – Acoustical Ceiling Tile (2'x2' black, 15/16" tegular edge)
Refer to APPENDIX A.

09 80 00 – Elastomeric Coatings for DOWSIL ALLGUARD Silicone Elastomeric Coating
Refer to APPENDIX A.

MECHANICAL SYSTEMS

Applicable Design Codes & Standards

A complete mechanical design will be provided for this project in accordance with the standards in the latest editions of the following listed applicable codes, ordinances, laws, and regulations.
Among them are the latest adopted editions of:

- 2023 Florida Mechanical Code
- 2023 Florida Energy Efficiency Code
- Florida Fire Prevention Code
- American Society of Heating, Refrigeration, and Air Conditioning Engineers (ASHRAE) Standards
- NFPA 90A, Installation of Air Conditioning and Ventilating Systems
- National Fire Code (NFC)
- SMACNA Standards
- Flagler Executive Airport Standards and Guidelines

HVAC

Below are the existing HVAC systems and recommendations. Scope of work items are listed in **RED**. A schematic is also provided visually indicating the anticipated scope (See Schematic "A").

- The existing five (8) story air traffic control tower at the Flagler airport is currently served by a combination of rooftop units, packaged terminal air conditioning units (PTACs) and a wall mounted mini split (electrical room).
    - The first floor contains storage, elevator equipment, electrical and a fire pump room. This floor has one (1-ton) existing mini split in the electrical room.

        - **One (1) (1-ton) mini split AHU and CU shall be replaced, one for one, with similar units in electrical room. Unit shall be equal to LG KSUAB121A / KNUAB121A, 208V 1ph, Heat pump, 12a/15a MCA/MOCP.**
            - **Coordinate with electrical contractor on the reuse of the existing equipment circuit. Contractor shall upgrade circuit and breaker as required to accommodate new unit.**
            - **Mount all unit high on wall in room and provided with integral condensate pump. Route 1" PVC condensate from room to exterior and terminate a min of 8" above greenery or shrubbery.**
            - **Mount on a 6" turned down exterior concrete pad utilizing hurricane condensing unit clips to meet all hurricane wind loading requirements. Contractor shall bid new but may reuse the existing condensing unit pad if approved by owner.**

    - The second through seventh floor contains office, storage, and equipment areas. Floor's 2,3,4,5, & 7 are served by one (1) 15,000btu/h (1.25 ton) PTAC. Floor 6 is served by two (2) 15,000btu/h (1.25 ton) PTAC's. These units each contain a 2KW heater and are 208V/1ph units.
        - PTAC units were replaced approximately in 2020 with Gree Units. Flagler Control Tower personnel have voiced concern with the cooling capacity of these units. Engineer observed that the PTAC's could not produce a comfort cooling level and that the space's maintained hot areas even with a set temperature of 70 degrees.

        - **PTAC's shall be replaced, one for one, with a (1) 15,000btu/h (1.25 ton) PTAC. Units shall be equal to Friedrich 105MBH PDE15K5SGR3 with 2.5kW heater; 208V 1ph, 14a/20a MCA/MOCP.**
            - **Coordinate with electrical contractor on the reuse of the existing equipment circuits. Contractor shall upgrade circuit and breaker as required to accommodate new unit.**
            - **Balance units to match existing outside airflow rates.**

- The Control tower level is served by two (2) Trane 36,000 btu/h (3 ton) nominal capacity packed roof top units (RTUs) mounted on the cab roof. Each unit is straight cool with electric heat and are 208V/3ph units.

    - **RTU's RTU shall be replaced, one for one, with two (2) new Lennox LCX036S5D, 208V 3ph, 7.5 KW heat, 24a/25a MCA/MOCP or equal.**
        - **Coordinate with electrical contractor on the reuse of the existing equipment circuit. Contractor shall upgrade circuit and breaker as required to accommodate new unit.**
        - **Contractor shall reconnect new condensate line to existing condensate infrastructure.**
        - **Provide curb adaptor and re-mount as required to meet all wind loading requirements.**
        - **Balance units to match existing outside airflow rates.**

    - **The Cab acoustic ceiling tile and air terminal devices mounted withing (diffuser and return grilles) shall be replaced one for one. Contractor shall connect new lay-in ceiling devices into existing ductwork, matching existing style and size (face and neck size). Contractor shall replace any ductwork that cannot be reused.**

- **General Scope Notes:**
    - The contractor shall verify that no campus controls system is used for monitoring or control of the HVAC systems serving this building. If so, contractor shall tie all new equipment into existing controls system.
        - Provide new controls (thermostats or other) for all new equipment.
    - Contractor shall budget all demo work into the scope of work along with full removal and disposal costs of all demolished equipment. Though, contractor shall offer salvage rights to the owner on any equipment removed.
    - Prior to bid the contractor shall visit the site to establish existing conditions. Prior to construction, the contractor shall verify all equipment sizes, quantities, and power requirements for coordination with new work.
    - Contractor shall budget any ancillary repair work required for the scope of work described. This may include, but is not limited to, paint, drywall, concrete, piping, and other accessories.
    - Where required, a full test and balance exercise and report shall be provided to the owner for any new HVAC system.

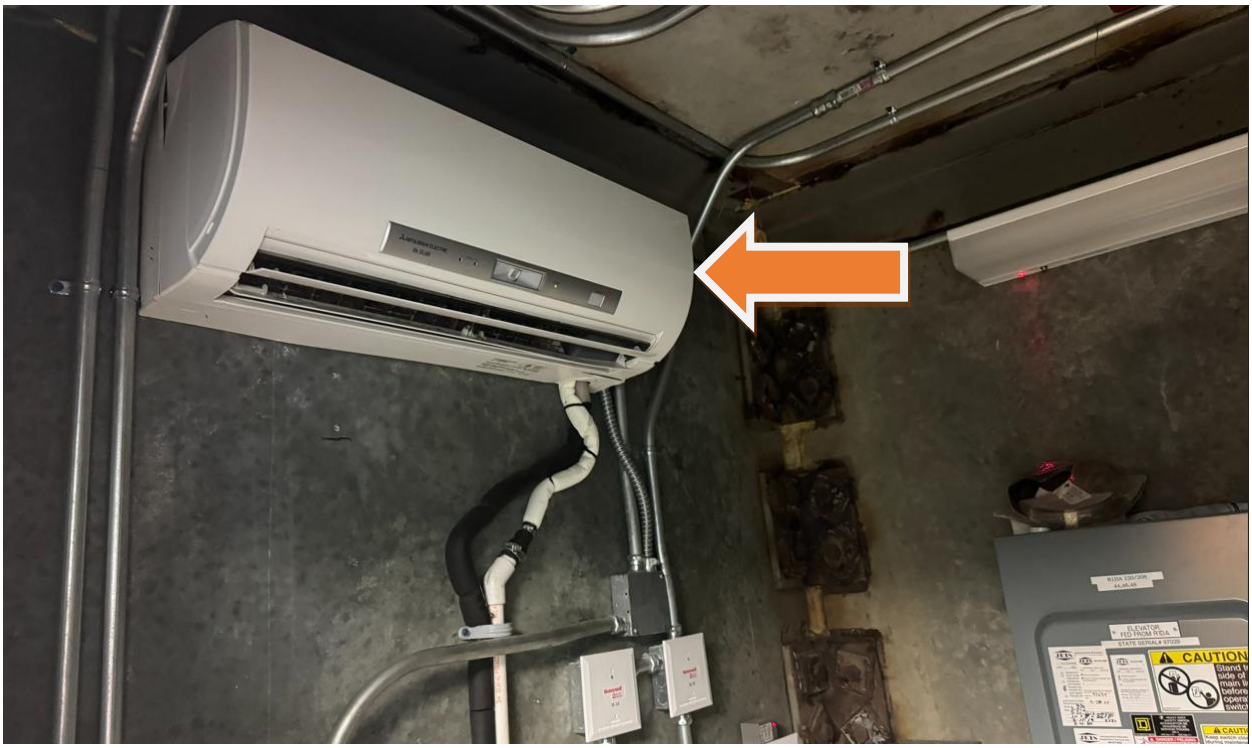

Photo #26: First floor mini split.

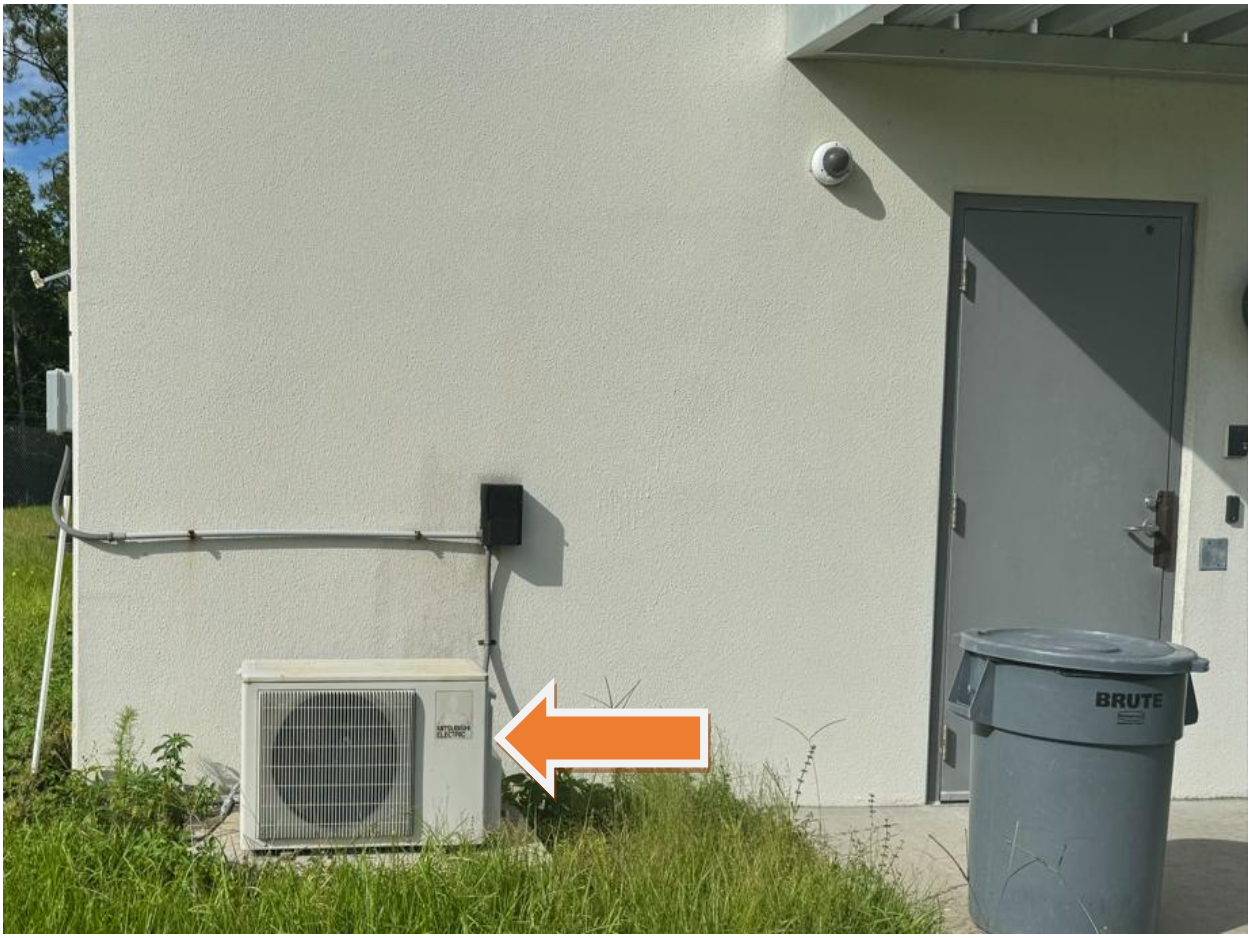

Photo #27: First floor mini-split.



Photo #28: First floor mini-split.



Photo #29: Second floor PTAC.



Photo #30: Second floor PTAC.



Photo #31: Third floor PTAC.



Photo #32: Third floor PTAC.

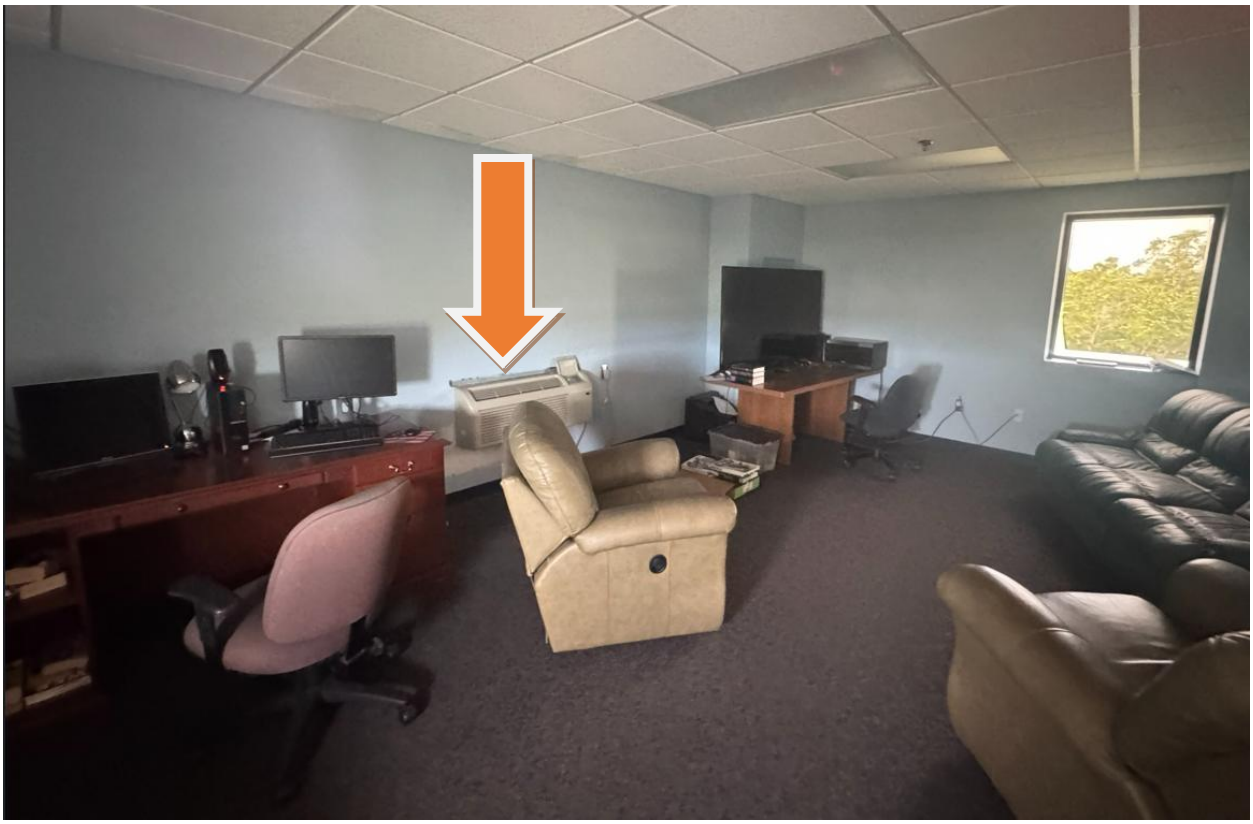

Photo #33: Fourth floor PTAC.



Photo #34: Fourth floor PTAC.



Photo #35: Fifth floor PTAC.



Photo #36: Fifth floor PTAC.

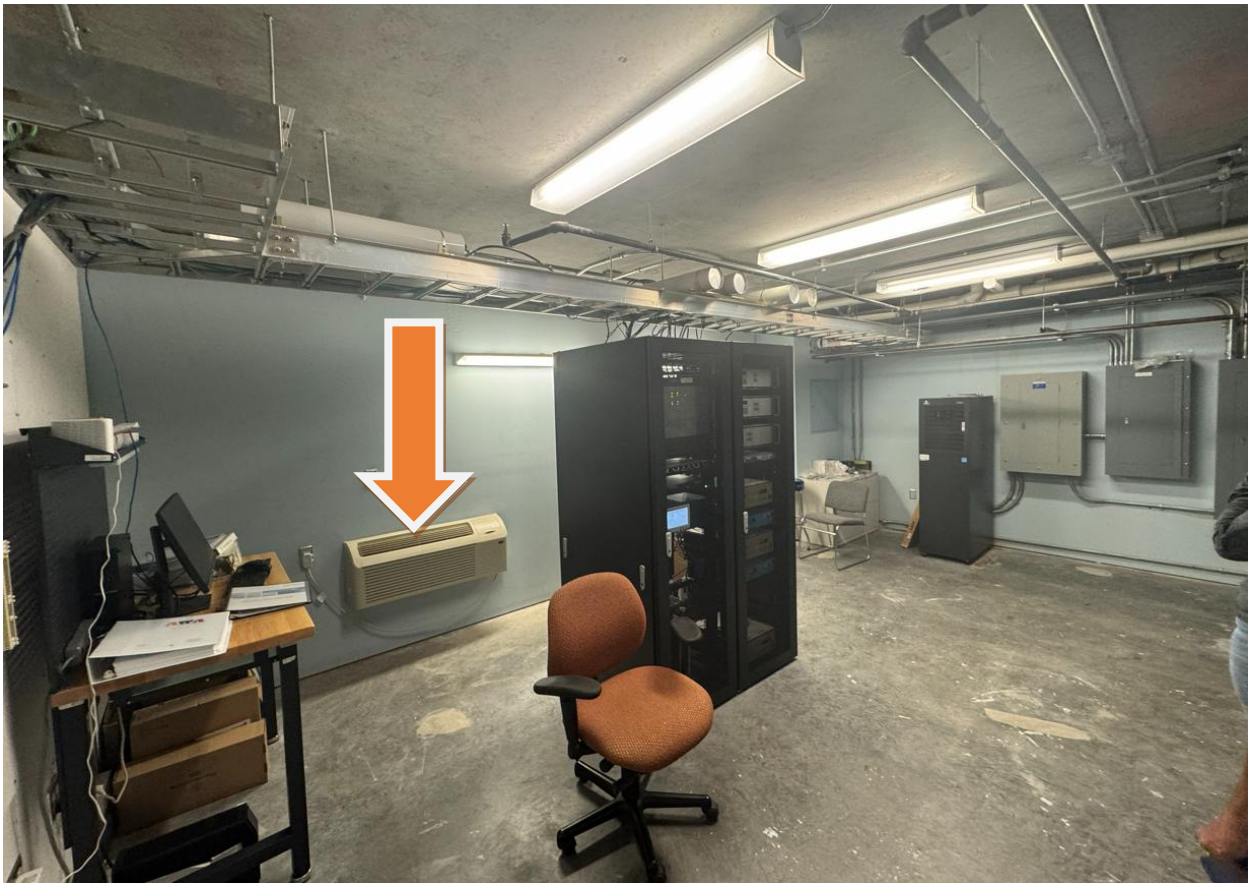

Photo #37: Sixth floor PTAC.

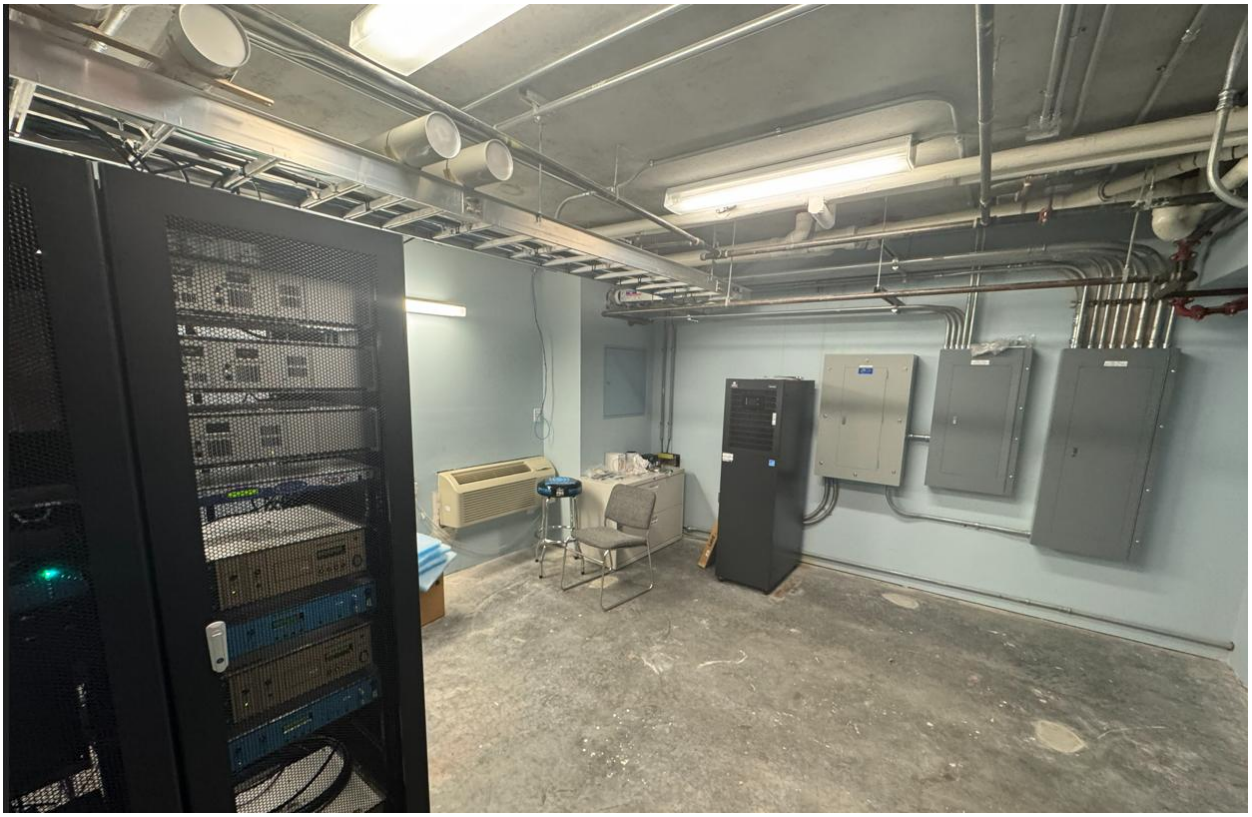

Photo #38: Sixth floor PTAC.



Photo #39: Sixth floor PTAC.



Photo #40: Sixth floor PTAC.



Photo #41: Seventh floor PTAC.

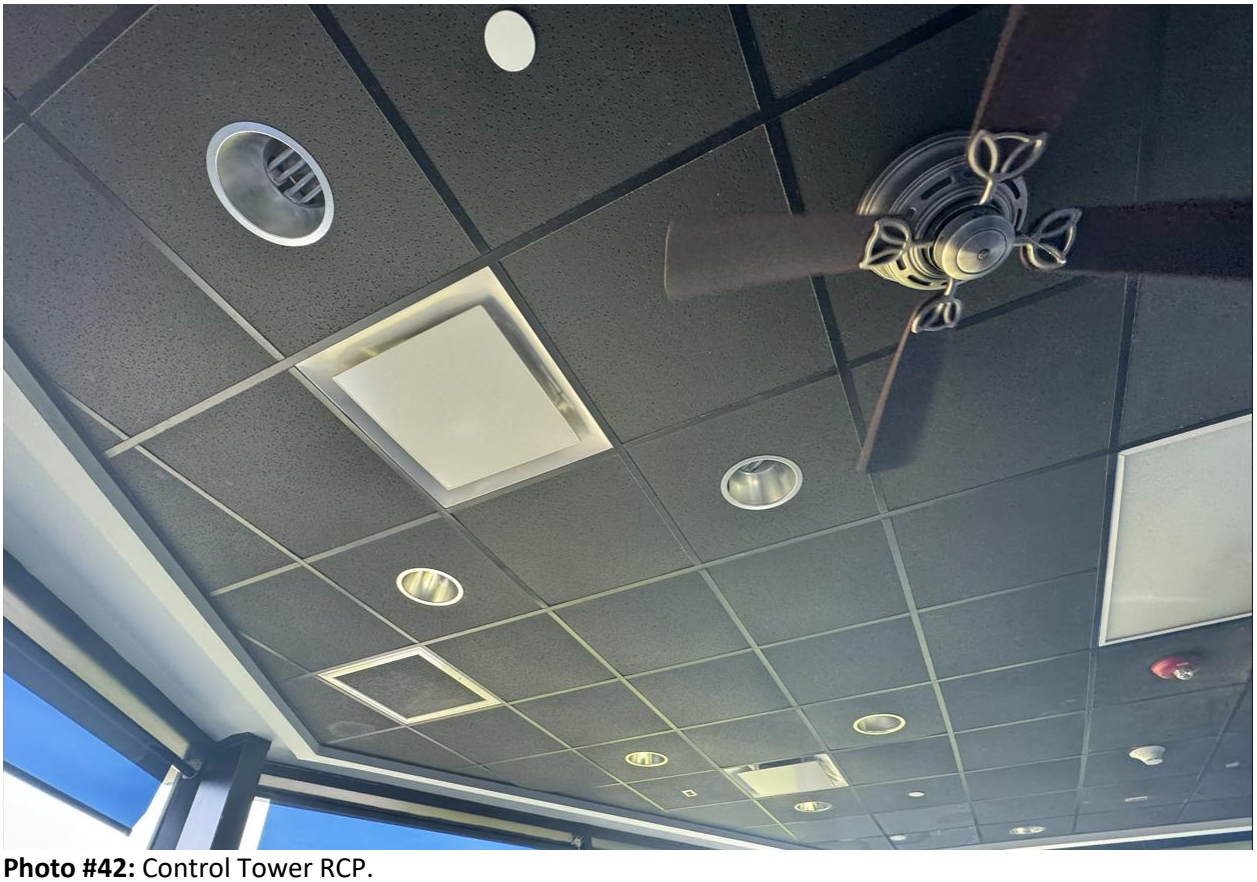

Photo #42: Control Tower RCP.

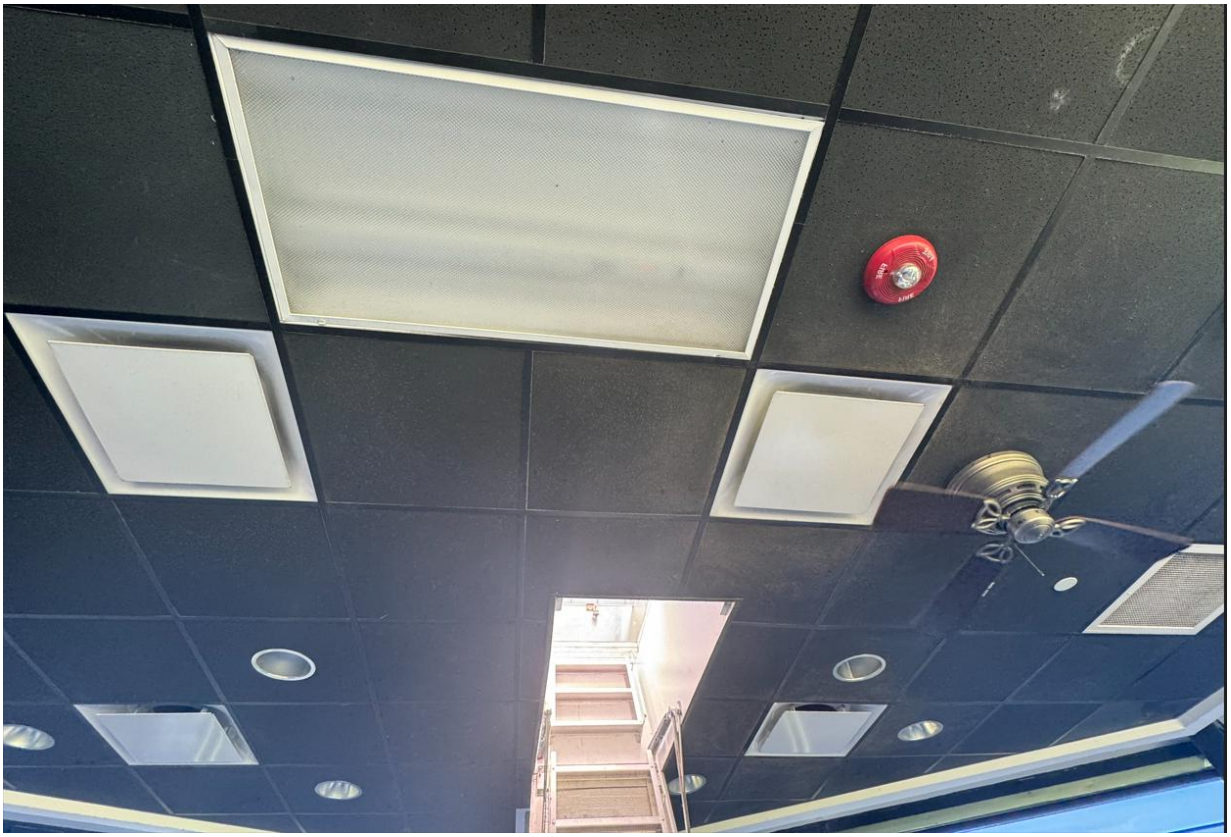

Photo #43: Control Tower RCP.

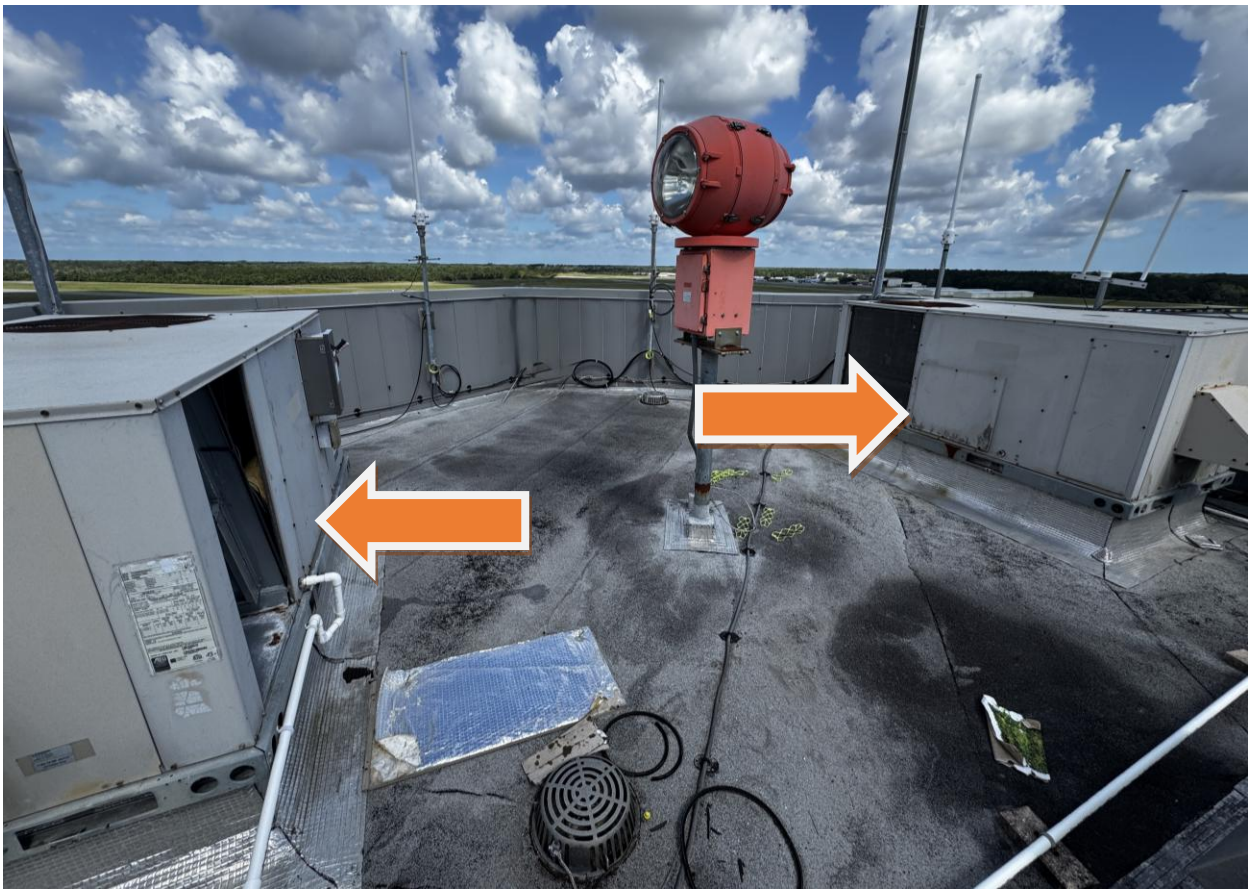

Photo #44: Control Tower RTUs.



Photo #45: Control Tower RTU data.

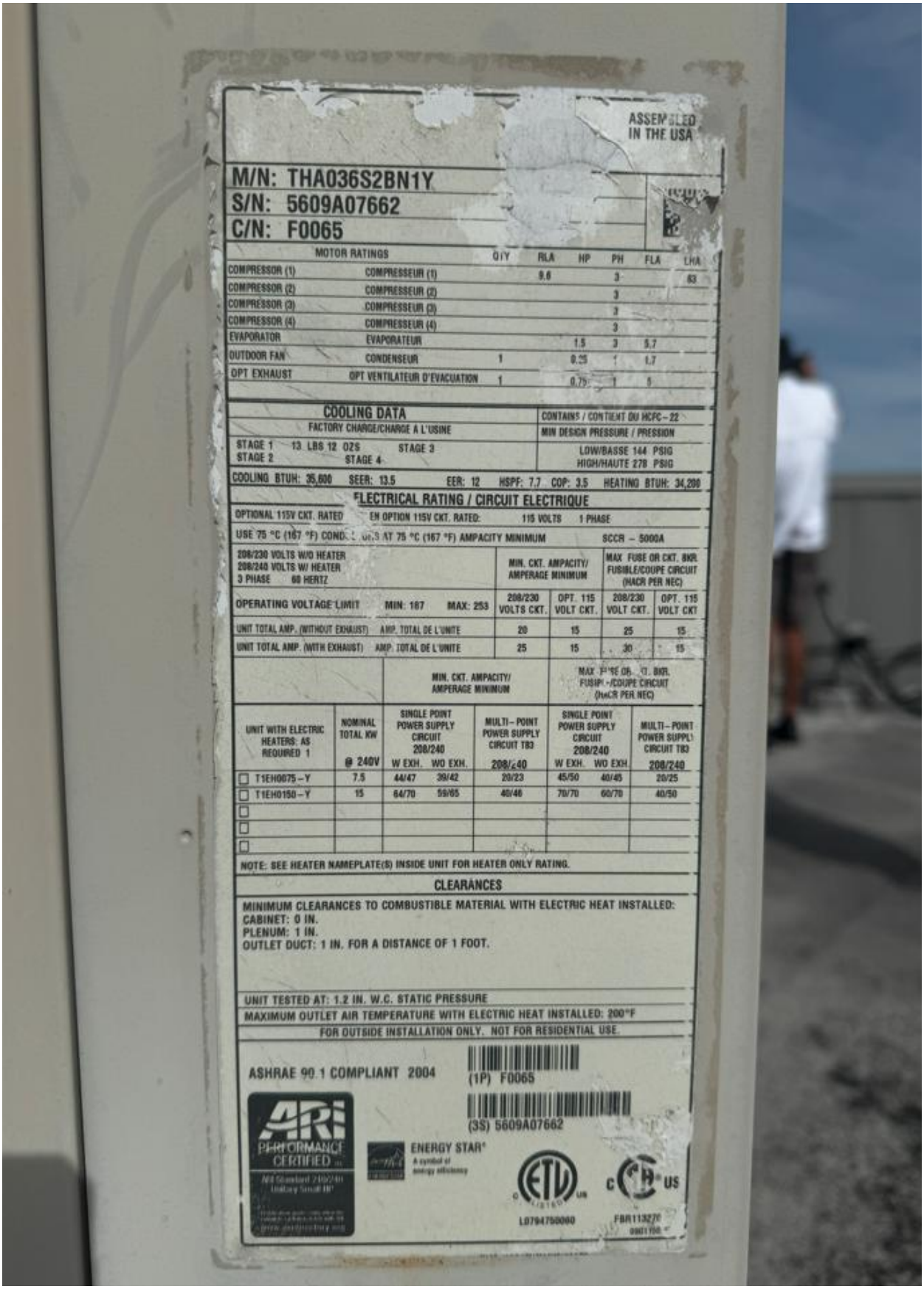

ASSEMBLED IN THE USA

M/N: THA036S2BN1Y
S/N: 5609A07662
C/N: F0065

MOTOR RATINGS		Q'TY	RLA	HP	PH	FLA	LRA
COMPRESSOR (1)	COMPRESSEUR (1)		9.6		3		63
COMPRESSOR (2)	COMPRESSEUR (2)				3		
COMPRESSOR (3)	COMPRESSEUR (3)				3		
COMPRESSOR (4)	COMPRESSEUR (4)				3		
EVAPORATOR	EVAPORATEUR			1.5	3	5.7	
OUTDOOR FAN	CONDENSEUR	1		0.25	1	1.7	
OPT EXHAUST	OPT VENTILATEUR D'EVACUATION	1		0.75	1	5	

COOLING DATA

FACTORY CHARGE/CHARGE A L'USINE
STAGE 1 13 LBS 12 OZS STAGE 3
STAGE 2 STAGE 4

CONTAINS / CONTIENT DU HCFC – 22
MIN DESIGN PRESSURE / PRESSION
LOW/BASSE 144 PSIG
HIGH/HAUTE 278 PSIG

COOLING BTUH: 35,600 SEER: 13.5 EER: 12 HSPF: 7.7 COP: 3.5 HEATING BTUH: 34,200

ELECTRICAL RATING / CIRCUIT ELECTRIQUE

OPTIONAL 115V CKT. RATED — EN OPTION 115V CKT. RATED: 115 VOLTS 1 PHASE

USE 75 °C (167 °F) COND. : 06.3 AT 75 °C (167 °F) AMPACITY MINIMUM — SCCR – 5000A

208/230 VOLTS W/O HEATER
208/240 VOLTS W/ HEATER
3 PHASE 60 HERTZ

	MIN. CKT. AMPACITY/ AMPERAGE MINIMUM		MAX FUSE OR CKT. BKR. FUSIBLE/COUPE CIRCUIT (NACR PER NEC)	
OPERATING VOLTAGE LIMIT MIN: 187 MAX: 253	208/230 VOLTS CKT.	OPT. 115 VOLT CKT.	208/230 VOLT CKT.	OPT. 115 VOLT CKT
UNIT TOTAL AMP. (WITHOUT EXHAUST) AMP. TOTAL DE L'UNITE	20	15	25	15
UNIT TOTAL AMP. (WITH EXHAUST) AMP. TOTAL DE L'UNITE	25	15	30	15

UNIT WITH ELECTRIC HEATERS: AS REQUIRED 1	NOMINAL TOTAL KW @ 240V	MIN. CKT. AMPACITY/ AMPERAGE MINIMUM: SINGLE POINT POWER SUPPLY CIRCUIT 208/240 W EXH.	SINGLE POINT POWER SUPPLY CIRCUIT 208/240 WO EXH.	MULTI – POINT POWER SUPPLY CIRCUIT T83 208/240	MAX FUSE OR CT. BKR. FUSIBLE/COUPE CIRCUIT (NACR PER NEC): SINGLE POINT POWER SUPPLY CIRCUIT 208/240 W EXH.	SINGLE POINT POWER SUPPLY CIRCUIT 208/240 WO EXH.	MULTI – POINT POWER SUPPLY CIRCUIT T83 208/240
☐ T1EH0075 – Y	7.5	44/47	39/42	20/23	45/50	40/45	20/25
☐ T1EH0150 – Y	15	64/70	59/65	40/46	70/70	60/70	40/50
☐							
☐							
☐							

NOTE: SEE HEATER NAMEPLATE(S) INSIDE UNIT FOR HEATER ONLY RATING.

CLEARANCES

MINIMUM CLEARANCES TO COMBUSTIBLE MATERIAL WITH ELECTRIC HEAT INSTALLED:
CABINET: 0 IN.
PLENUM: 1 IN.
OUTLET DUCT: 1 IN. FOR A DISTANCE OF 1 FOOT.

UNIT TESTED AT: 1.2 IN. W.C. STATIC PRESSURE
MAXIMUM OUTLET AIR TEMPERATURE WITH ELECTRIC HEAT INSTALLED: 200°F
FOR OUTSIDE INSTALLATION ONLY. NOT FOR RESIDENTIAL USE.

ASHRAE 90.1 COMPLIANT 2004

(1P) F0065

(3S) 5609A07662

ARI PERFORMANCE CERTIFIED

ENERGY STAR®

L0794750080

FBR113270

Photo #46: Control Tower RTU data.

ELECTRICAL SYSTEMS

Applicable Design Codes & Standards

All electrical work completed shall be by a licensed electrician and in accordance with all local, state, and national codes and standards. Among them are the latest adopted editions of:

- American with Disabilities Act (ADA)
- American National Standards Institute (ANSI)
- 20203Florida Building Code
- National Electrical Safety Code (IEEE-C2)
- National Electrical Manufacturers Association (NEMA)
- National Electrical Code 2020 (NFPA 70)
- National Fire Alarm Code (NFPA 72)
- Florida Fire Prevention Code NFPA 1
- NFPA 101 Life Safety Code
- Standard for Emergency and Standby Power Systems (NFPA 110)
- Standard for the Installation of Lightning Protection Systems (NFPA 780)
- The Occupational Safety and Health Act (OSHA)
- Underwriters' Laboratories, Inc. (UL)

The electrical scope of work for this project is depicted below. Scope specific items are listed in **RED**.

Electrical Service and Power Distribution System

Existing power

- Overall, this air traffic control tower building is served by a 120/208V 3ph, 400a service. This service is backed up by a 170KW generator with automatic transfer switch for backup power. A fire pump is also powered from this service. A one-line power riser diagram is shown below for reference as taken from the "New Air Traffic Control Tower" construction document set by RS&H, Inc. Dated 07/01/08.

EXISTING ELECTRICAL POWER RISER DIAGRAM (FOR REFERENCE ONLY)

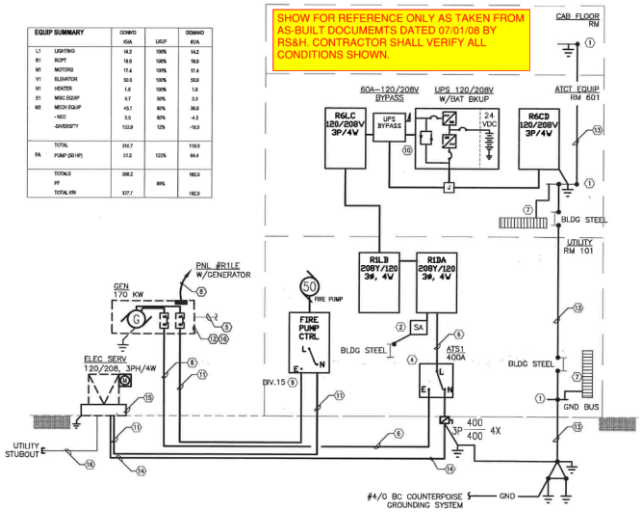

- All existing power switchgear, devices, conduit, and conductors appear in good condition and shall remain as is.
  - **Contractor shall perform function testing of the generator to confirm it is in good working condition. If deficiencies are found, the contractor shall present a remedial action proposal to the owner for approval.**

- **The electrical contractor shall budget refeeding all existing mechanical units listed in the mechanical DCP narrative.**
    - **Mechanical circuits provided shall be via new copper conductors in EMT conduit. All new circuiting shall be sized and routed in accordance with the procured manufacturer's recommended circuit and MOCP sizing. All sizes shall account for max FBC voltage drop (5%) and be sized in accordance with NEC.**
    - **In general, the units to be replaced shall be confirmed on site and with the mechanical contractor, but will include:**
        - **Seven (7) packaged terminal units (PTACs).**
        - **Two (2) packaged roof top units (RTUs).**
        - **One (1) wall mounted mini-split unit.**
    - **If found acceptable for reuse, existing circuiting may be reused to feed replaced equipment. Though, the contractor shall verify existing breaker and conductor sizes are adequate for the new units and modify as required.**

Lighting

- Exterior
    - **The two (2) existing exterior light fixtures on building shall be replaced, one for one, with new LED equivalent.**
    - **There were mentions of additional grade mounted light fixtures, splashing up lighting on the building. Owner to confirm.** (Contractor shall provide new LED equivalent light fixtures)

- All interior lighting appears to be in working condition. Though:
    - **All existing light fixtures to be replaced, one for one, with new LED equivalent.**
        - **Contractor may reuse existing circuits and control, modifying only as required to accommodate the new light fixtures.**
    - See below existing lighting plans as taken from the "New Air Traffic Control Tower" construction document set by RS&H, Inc. Dated 07/01/08. These are provided for reference only and all bidding shall be predicated on field verified conditions, fixture types and quantities found.

EXISTING ELECTRICAL LIGHTING PLANS (FOR REFERENCE ONLY)

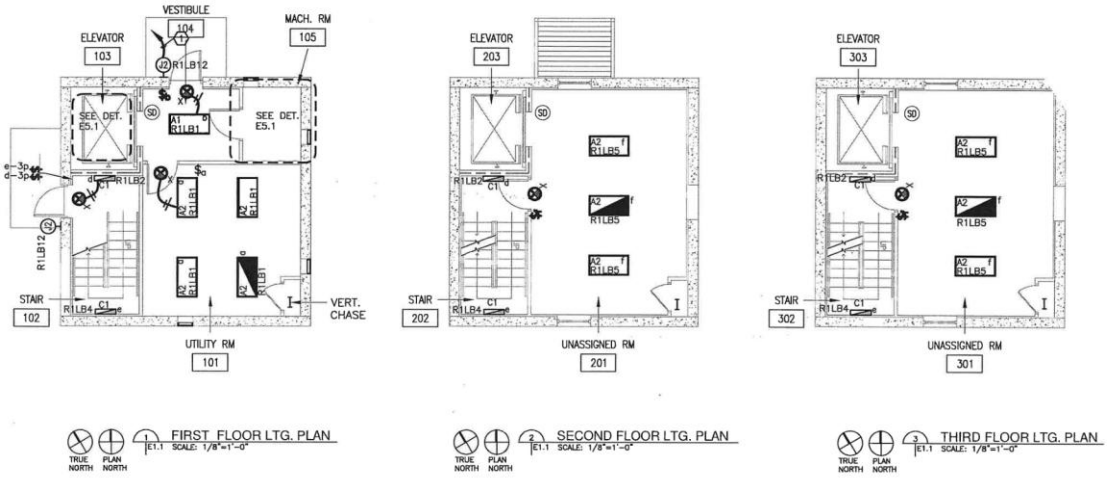

1 FIRST FLOOR LTG. PLAN E1.1 SCALE: 1/8"=1'-0"

2 SECOND FLOOR LTG. PLAN E1.1 SCALE: 1/8"=1'-0"

3 THIRD FLOOR LTG. PLAN E1.1 SCALE: 1/8"=1'-0"

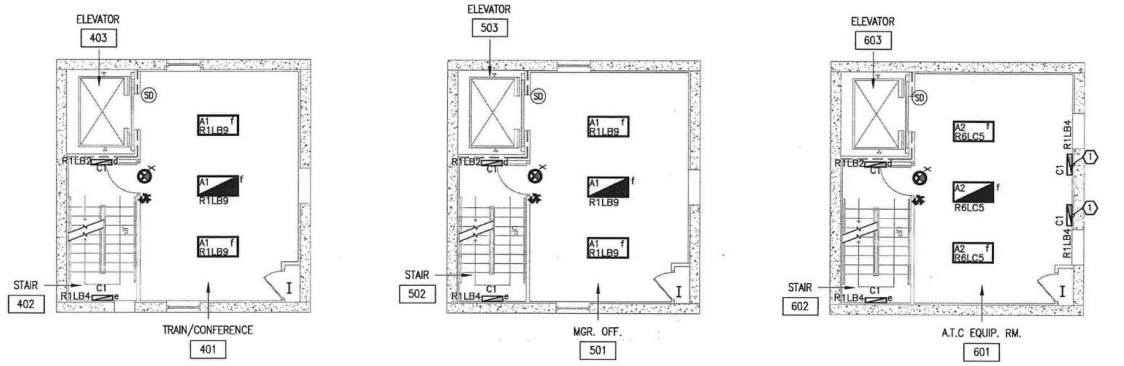

4 FOURTH FLOOR LTG. PLAN E1.2 SCALE: 1/8"=1'-0"

5 FIFTH FLOOR LTG. PLAN E1.2 SCALE: 1/8"=1'-0"

6 SIXTH FLOOR LTG. PLAN E1.2 SCALE: 1/8"=1'-0"

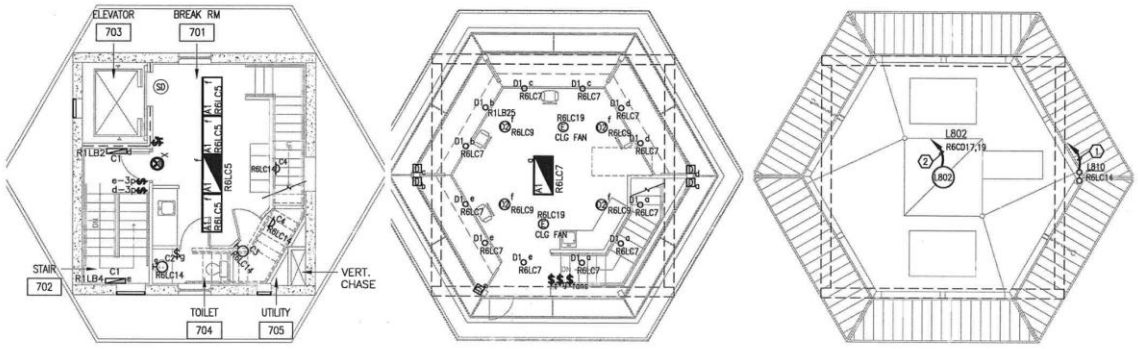

7 SEVENTH FLOOR LTG. PLAN E1.3 SCALE: 1/8"=1'-0"

8 CAB FLOOR LTG. PLAN E1.3 SCALE: 1/8"=1'-0"

9 ROOF LTG. PLAN E1.3 SCALE: 1/8"=1'-0"

Access Control

- Exterior
  - **The contractor shall provide a new gate control system. The system shall be congruent with the Flagler Airport access control standards, manufacturer, model, and specifications.**
  - **The contactor shall replace the existing access control at the building's main entrance door and elevator door. The system shall be congruent with the Flagler Airport access control standards, manufacturer, model, and specifications.**
  - **Coordinate all access control scope and associated requirements with the owner directly and their preferred access control vendor.**

Raceways and Conductors

If required to replace damaged or undersized conduit/conductor, any new conduits and conductors will be as follows:

- Service entrance conductors – Schedule 40 PVC buried 36" below grade.
- Panelboard feeders – Electrical Metallic Tubing were run concealed and above grade. Rigid galvanized steel were run exposed and above grade.
- All branch conductors shall copper. Conductors feeding panels and larger than #1 may be aluminum where required.
- Modular wiring systems will not be allowed.
- MC cable may be allowed only as approved by the owner.

Fire Alarm System

The building is served by an existing fire alarm system. This fire alarm system is assumed to be in good working condition and shall remain as is.

Lightning Protection

- An existing lightning protection system is provided to the building. **The contractor shall repair and/or replace any arrestors or wiring to recertify the lighting protection systems. A rooftop UL Master Label lightning protection system will be required to cover all building areas. Where mechanical equipment or other external components on the roof where existing lighting protection arrestor equipment is mounted, the arrestors/equipment shall be remounted to the new equipment.** All new air terminals, bonds to rooftop equipment and other metallic items, down conductors, buried counterpoise conductors and ground rods, all as per NFPA 780 and UL 96A. The system will be modified only by an LPI approved installation contractor.



Photo #47: Existing switchgear.



Photo #48: Existing switchgear.



Photo #49: Existing switchgear.



Photo #50: Existing switchgear.



Photo #51: Existing Control Tower lighting.

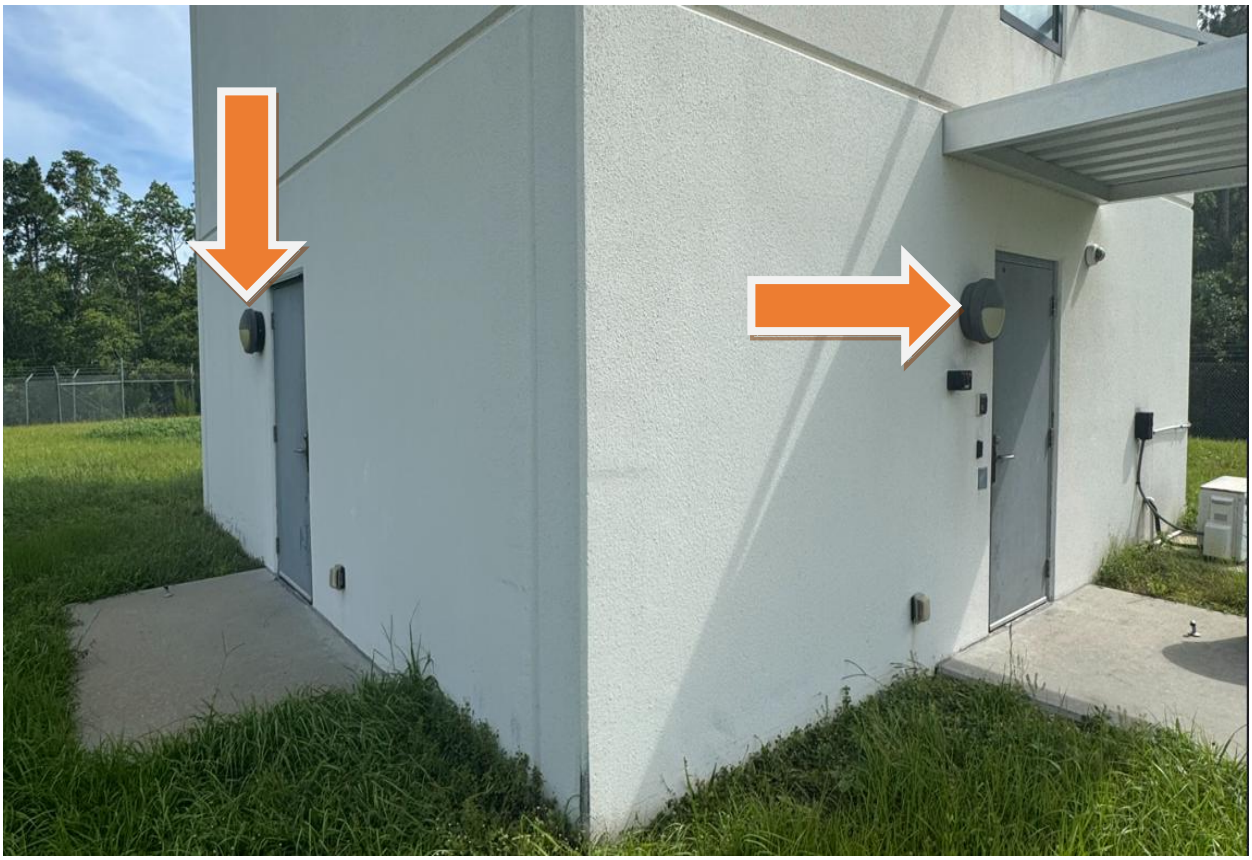

Photo #52: Existing exterior building lighting.

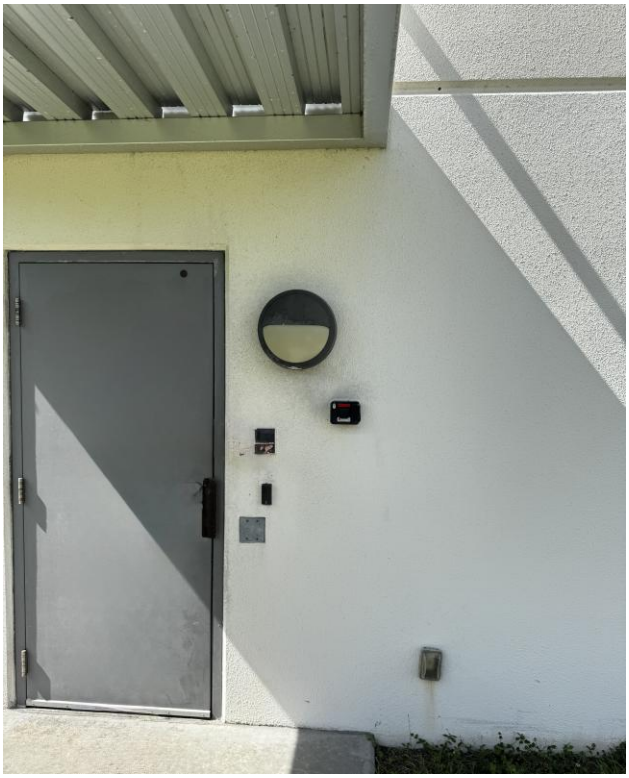

Photo #53: Existing exterior building access control.



Photo #54: Existing exterior building access control.
Bollards shall be painted.



Photo #55: Existing exterior building access control.
Bollards shall be painted.



Photo #56: Existing exterior building access control.

PLUMBING SYSTEMS

Applicable Design Codes & Standards

A complete plumbing design will be provided for this project in accordance with the standards in the latest editions of the following listed applicable codes, ordinances, laws, and regulations.
Among them are the latest adopted editions of:

- 2023 Florida Plumbing Code.
- 2023 Florida Energy Efficiency Code.
- Florida Fire Prevention Code.
- American Society of Heating, Refrigeration, and Air Conditioning Engineers (ASHRAE) Standards
- American Society of Plumbing Engineers (ASPE)
- NFPA 90A, Installation of Air Conditioning and Ventilating Systems
- National Fire Code (NFC)
- Flagler Executive Airport Standards and Guidelines.

Plumbing

Below are the existing plumbing systems and recommendations. Scope of work items are listed in **RED**.

- The existing building plumbing system shall remain as is outside of other renovation work coordination. Specifically:
    - **Coordinate with catwalk renovation works. Route drainage piping tight to control tower exterior surface, through catwalk structure, and along the underside of the catwalk framing to the designated perimeter discharge edge. This alignment optimizes architectural aesthetics and mitigates visual impact.**



Photo #57: **Roof drain piping shall be rerouted as described in plumbing section.**



Photo #58: **Roof drain piping shall be rerouted as described in plumbing section.**

APPENDIX A

Technical Data Sheet

DOWSIL™ 790 Silicone Building Sealant

Ultra-low-modulus sealant for sensitive natural stone, porous stone, masonry and concrete façades

Features & Benefits

- Low-staining and plasticizer free, suitable for porous substrates
- Excellent performance even in building joints that experience extreme movement
- Extension/compression capability of +100/-50 percent
- Conforms to ISO 11600F-25LM
- Excellent weathering properties and resistance to sunlight, rain, snow, and temperature extremes
- Excellent unprimed adhesion to masonry, concrete and natural stone substrates
- Easy application over a wide temperature range

Composition

- One-part, neutral-cure silicone sealant

Applications

- Sealing of joints between natural stone
- Sealing of curtainwall joints and mullion joints
- Sealing of expansion and control joints
- Sealing of precast concrete panel joints and many other construction joints

Typical Properties

Specification Writers: These values are not intended for use in preparing specifications.

Test	Property	Unit	Result
	As Supplied		
CTM[1] 98	Skin-over Time (23°C, 50% R.H.)	min	9
CTM 95	Tack-Free Time (23°C, 50% R.H.)	min	31
CTM 663	Cure Rate (23°C, 50% R.H.) 1 Day 3 Days	 mm mm	 2.8 5.8
	As Cured – After 28 Days at 23°C and 50% RH		
CTM 99	Durometer Hardness, Shore A		11
ISO[2] 8339	Modulus 100%	MPa	0.08
ISO 8339	Elongation at Break	%	840

1. CTMs: Corporate Test Methods. Copies of CTMs are available upon request.
2. ISO: International Standardization Organization

®™Trademark of The Dow Chemical Company ("Dow") or an affiliated company of Dow

© 2019–2020 The Dow Chemical Company. All rights reserved.

Typical Properties (Cont.)

Test	Property	Unit	Result
ISO 7389	Elastic Recovery	%	78
ASTM[3] C 719	Joint Movement Capabilities According to ASTM Standard Extension/Compression	%	+100/-50
ISO 9047	Joint Movement Capability According to ISO Standard	%	±25 (highest category)
ASTM C 1248	Staining, Various Substrates		None

3. ASTM: American Society for Testing and Materials.

Description

Ultra-low-modulus sealant for masonry, concrete and natural stone façades. DOWSIL™ 790 Silicone Building Sealant provides excellent performance, even in building joints that experience extreme movement. It places a low stress on the sealant/substrate bond line to minimize failures in moving joints.

DOWSIL™ 790 Silicone Building Sealant is available in black and gray.

Approvals/ Specifications

This sealant meets or exceeds the requirements of:

- ISO 11600F 25LM
- EN15651 – CE MARK
- ASTM Specification C 920, Type S, Grade NS, Class 100/50, Use T, NT, M, G, A, and O

How to Use

Surface Preparation
Ensure that surfaces to be sealed are clean, dry, sound and grease-free. Porous substrates such as concrete, brickwork, mortar, etc. must be mechanically cleaned of loose particles using a steel brush, sanding disc or any similar means. Clean non-porous surface with DOWSIL™ R-40 Universal Cleaner, dry thoroughly with a clean, lint-free cloth and wait for at least half an hour before application of sealant.

Note: When using any solvent, always provide adequate ventilation. Avoid heat, sparks and open flames. Use solvent resistant gloves. Observe and follow all precautions listed on solvent container label.

Masking
Areas adjacent to the joints should be masked with tape to prevent contamination of the substrates and to ensure a neat sealant line. Masking tape should be removed immediately after tooling.

Priming
Primers are not usually required on stone, concrete and masonry substrates. On non-porous substrates such as anodized aluminum, priming might be needed. It is recommended to carry out test on such substrates to assess the need for priming. A suitable primer on non-porous substrates is DOWSIL™ 1200 OS Primer. Allow at least half an hour between priming and sealant application. Please contact Dow's technical service in case of doubt.

®™Trademark of The Dow Chemical Company ("Dow") or an affiliated company of Dow

© 2019–2020 The Dow Chemical Company. All rights reserved.

How to Use (Cont.)

Back-up Materials
Where back-up material is required, open cell backer rod is recommended. Back-up materials provide back pressure and avoid three sided adhesion that limits sealant movement capability.

Finishing
The joint should be tooled within 5 minutes of application to ensure good contact between the sealant and the substrate. Tooling of the sealant also gives a smooth, professional finish.

Clean-Up
If sealant is misapplied to porous substrates, it should be left until it is just cured and then removed by peeling, cutting or other mechanical means. Care should be taken not to damage plastic or coated surfaces.

Joint Design

The sealant joint width should be designed to accommodate the movement capability of the sealant. When designing joints using DOWSIL™ 790 Silicone Building Sealant, the minimum width should be 6 mm. For joints between 6–12 mm wide, a seal depth of 6 mm is required. For joints above 12 mm wide, a width to depth ratio of 2:1 should be used. As the sealant joint width becomes larger than 25 mm, the depth should be held at approximately 9 mm to 12 mm. In situations where fillet joints are needed, a minimum of 6 mm sealant bite to each substrate is recommended. For joint dimensions with a width greater than 25 mm or a depth greater than 15 mm, please contact your regional service centers for technical assistance.

Handling Precautions

PRODUCT SAFETY INFORMATION REQUIRED FOR SAFE USE IS NOT INCLUDED IN THIS DOCUMENT. BEFORE HANDLING, READ PRODUCT AND SAFETY DATA SHEETS AND CONTAINER LABELS FOR SAFE USE, PHYSICAL AND HEALTH HAZARD INFORMATION. THE SAFETY DATA SHEET IS AVAILABLE ON THE DOW WEBSITE AT DOW.COM, OR FROM YOUR DOW SALES APPLICATION ENGINEER, OR DISTRIBUTOR, OR BY CALLING DOW CUSTOMER SERVICE.

Usable Life and Storage

When stored at or below 32°C, DOWSIL™ 790 Silicone Building Sealant has a shelf life of 12 months from date of manufacture. Refer to product packaging for “Use By” date.

Limitations

DOWSIL™ 790 Silicone Building Sealant should not be applied:

- In structural applications.
- Below grade or to materials that outgas, which can cause bubbling in curing sealant.
- On brass or copper or other similar material that can be corroded.
- To surfaces that are continuously immersed in water.
- For use as an interior penetration firestop sealing system.
- To building materials that bleed oils, plasticizers, or solvents – materials such as impregnated wood, oil based caulks, green or partially vulcanized rubber gaskets, or tapes or bituminous below-grade waterproofing and asphalt-impregnated fiberboard.
- In totally confined spaces because the sealant requires atmospheric moisture for cure.
- To surfaces that will be painted after application. The paint film will not stretch with the extension of the sealant and may crack and peel and most likely will not adhere to the sealant.
- To surfaces in direct or indirect contact with food.

®™Trademark of The Dow Chemical Company (“Dow”) or an affiliated company of Dow
DOWSIL™ 790 Silicone Building Sealant

© 2019–2020 The Dow Chemical Company. All rights reserved.

Limitations (Cont.)

- To wet or frost-laden surfaces.
- In applications where solvents or primers are not fully dried prior to sealant application. Uncured sealant is very sensitive to many solvents, primers, and cleaning agents; these may cause the sealant to remain uncured or tacky.

This product is neither tested nor represented as suitable for medical or pharmaceutical uses.

Health and Environmental Information

To support customers in their product safety needs, Dow has an extensive Product Stewardship organization and a team of product safety and regulatory compliance specialists available in each area.

For further information, please see our website, dow.com or consult your local Dow representative.

Disposal Considerations

Dispose in accordance with all local, state (provincial) and federal regulations. Empty containers may contain hazardous residues. This material and its container must be disposed in a safe and legal manner.

It is the user's responsibility to verify that treatment and disposal procedures comply with local, state (provincial) and federal regulations. Contact your Dow Technical Representative for more information.

Product Stewardship

Dow has a fundamental concern for all who make, distribute, and use its products, and for the environment in which we live. This concern is the basis for our product stewardship philosophy by which we assess the safety, health, and environmental information on our products and then take appropriate steps to protect employee and public health and our environment. The success of our product stewardship program rests with each and every individual involved with Dow products - from the initial concept and research, to manufacture, use, sale, disposal, and recycle of each product.

Customer Notice

Dow strongly encourages its customers to review both their manufacturing processes and their applications of Dow products from the standpoint of human health and environmental quality to ensure that Dow products are not used in ways for which they are not intended or tested. Dow personnel are available to answer your questions and to provide reasonable technical support. Dow product literature, including safety data sheets, should be consulted prior to use of Dow products. Current safety data sheets are available from Dow.

dow.com

NOTICE: No freedom from infringement of any patent owned by Dow or others is to be inferred. Because use conditions and applicable laws may differ from one location to another and may change with time, Customer is responsible for determining whether products and the information in this document are appropriate for Customer's use and for ensuring that Customer's workplace and disposal practices are in compliance with applicable laws and other government enactments. The product shown in this literature may not be available for sale and/or available in all geographies where Dow is represented. The claims made may not have been approved for use in all countries. Dow assumes no obligation or liability for the information in this document. References to "Dow" or the "Company" mean the Dow legal entity selling the products to Customer unless otherwise expressly noted. NO WARRANTIES ARE GIVEN; ALL IMPLIED WARRANTIES OF MERCHANTABILITY OR FITNESS FOR A PARTICULAR PURPOSE ARE EXPRESSLY EXCLUDED.

®Trademark of The Dow Chemical Company

Technical Data Sheet

DOWSIL™ 795 Silicone Building Sealant

Description

Neutral, one part silicone sealant

Sustainability Attribute:

Decarbia™
Advancing carbon neutrality with DOW

Uses / Applications

- Structural and nonstructural glazing
- Structural attachment of many panel systems
- Panel stiffener applications
- Weather sealing of most common construction materials including glass, aluminum, steel, painted metal, EIFS, granite and other stone, concrete, brick and plastics

Composition

- One–part, neutral cure, RTV silicone sealant

Benefits

- Suitable for most new construction and remedial sealing applications
- Versatile – high performance structural glazing and weather sealing from a single product
- Available in 15 standard colors; custom colors also available
- Excellent weatherability virtually unaffected by sunlight, rain, snow, ozone and temperature extremes of -40°F (-40°C) to 300°F (149°C)
- Excellent unprimed adhesion to a wide variety of construction materials and building components, including anodized, alodined, most coated and many Kynar painted aluminums
- Ease of application – ready to use as supplied
- Ease of use – all temperature gunnability, easy tooling and low-odor cure byproduct
- Meets global standards (Americas, Asia and Europe)

Typical Properties

Specification Writers: These values are not intended for use in preparing specifications.

Test[1]	Property	Unit	Result
	As Supplied		
ASTM C 679	Tack Free Time, 50% RH	hours	3
	Curing Time at 25°C (77°F) and 50% RH	days	7–14
	Full Adhesion	days	14–21
ASTM C 639	Flow, Sag or Slump	inches (mm)	0.1 (2.54)
	Working Time	minutes	20–30

1. ASTM: American Society for Testing and Materials.

®™Trademark of The Dow Chemical Company ("Dow") or an affiliated company of Dow
DOWSIL™ 795 Silicone Building Sealant
© 2017–2025 The Dow Chemical Company. All rights reserved.

Typical Properties (Cont.)

Test	Property	Unit	Result
	VOC Content[2]	g/L	30
	As Cured After 21 Days at 25°C (77°F) and 50% RH		
ASTM D 2240	Durometer Hardness, Shore A	points	35
ASTM C 794	Peel Strength	lb/in (kg/cm)	32 (5.7)
ASTM C 1135	Tension Adhesion Strength		
	At 25% Extension	psi (MPa)	45 (0.310)
	At 50% Extension	psi (MPa)	60 (0.414)
ASTM C 719	Joint Movement Capability	percent	±50
ASTM C 1248	Staining (Granite, Marble, Limestone, Brick and Concrete)		None
	As Cured After 21 Days at 25°C (77°F) and 50% RH Followed by 10,000 Hours in a QUV Weatherometer, ASTM G 53		
ASTM C 1135	Tension Adhesion Strength		
	At 25% Extension	psi (MPa)	35 (0.241)
	At 50% Extension	psi (MPa)	50 (0.345)

2. Based on South Coast Air Quality Management District of California. Maximum VOC is listed both inclusive and exclusive of water and exempt compounds.

Description

DOWSIL™ 795 Silicone Building Sealant is a one-part, neutral-cure, architectural-grade sealant that easily extrudes in any weather and cures quickly at room temperature. This cold-applied, non-sagging silicone material cures to a medium modulus silicone rubber upon exposure to atmospheric moisture. The cured sealant is durable and flexible enough to accommodate ± 50 percent movement of original joint dimension when installed in a properly designed weather seal joint. In a properly designed structurally glazed joint, the sealant is strong enough to support glass and other panel materials under high wind load.

Approvals/ Specifications

DOWSIL™ 795 Silicone Building Sealant meets the requirements of:

- Federal Specification TT-S 001 543A (COM-NBS) Class A for silicone building sealants
- Federal Specification TT-S-00230C (COM-NBS) Class A for one-part building sealants
- ASTM Specification C 920 Type S, Grade NS, Class 50, Use NT, G, A and O
- ASTM Specification C 1184 for structural silicone sealants
- Canadian Specification CAN2-19.13- M82

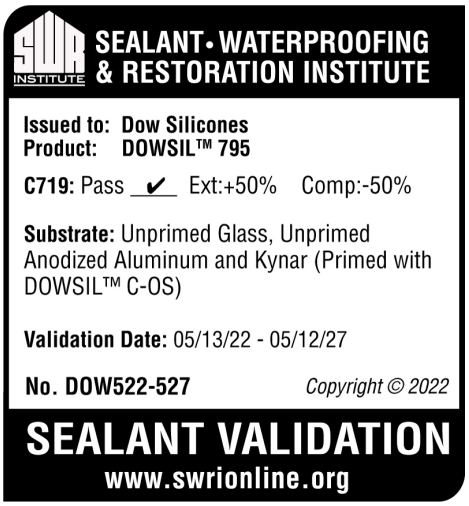

®™Trademark of The Dow Chemical Company ("Dow") or an affiliated company of Dow

© 2017–2025 The Dow Chemical Company. All rights reserved.

Colors

DOWSIL™ 795 Silicone Building Sealant is available in 15 colors: white, limestone, champagne, natural stone, gray, black, bronze, sandstone, adobe tan, dusty rose, rustic brick, blue spruce, anodized aluminum, charcoal, and ivy green. Custom colors may be ordered to match virtually any substrate.

How to Use

Please consult the *Dow Americas Technical Manual*, Form No. 62-1112, for detailed information on state-of-the-art application methods and joint design.

Preparation
Clean all joints, removing all foreign matter and contaminants such as grease, oil, dust, water, frost, surface dirt, old sealants or glazing compounds and protective coatings.

Application Method
Install backing material or joint filler, setting blocks, spacer shims and tapes. Mask areas adjacent to joints to ensure neat sealant lines. Primer is generally not required on non-porous surfaces, but may be necessary for optimal sealing of certain porous surfaces. A test placement is always recommended. Apply DOWSIL™ 795 Silicone Building Sealant in a continuous operation using positive pressure. (The sealant can be applied using many types of air-operated guns and most types of bulk dispensing equipment.) Before a skin forms (typically within 15 minutes), tool the sealant with light pressure to spread the sealant against the backing material and joint surfaces. Remove masking tape as soon as the bead is tooled.

Handling Precautions

PRODUCT SAFETY INFORMATION REQUIRED FOR SAFE USE IS NOT INCLUDED IN THIS DOCUMENT. BEFORE HANDLING, READ PRODUCT AND SAFETY DATA SHEETS AND CONTAINER LABELS FOR SAFE USE, PHYSICAL AND HEALTH HAZARD INFORMATION. THE SAFETY DATA SHEET IS AVAILABLE ON THE DOW WEBSITE AT DOW.COM, OR FROM YOUR DOW SALES APPLICATION ENGINEER, OR DISTRIBUTOR, OR BY CALLING DOW CUSTOMER SERVICE.

Usable Life and Storage

When stored at or below 27°C (80°F), DOWSIL™ 795 Silicone Building Sealant has a shelf life of 12 months from the date of manufacture. Refer to product packaging for “Use By Date.”

Packaging Information

DOWSIL™ 795 Silicone Building Sealant is supplied in 10.3 fl oz. (305 mL) disposable plastic cartridges that fit ordinary caulking guns, 20 fl oz. (590 mL) sausages and 2 and 4.5 gal (7.5 and 17 L) bulk containers.

Limitations

DOWSIL™ 795 Silicone Building Sealant should not be used:

- In structural applications without prior review and approval by your local sales application engineer
- In below grade applications
- When surface temperatures exceed 50°C (122°F) during installation
- On surfaces that are continuously immersed in water
- On building materials that bleed oils, plasticizers or solvents that may affect adhesion
- On frost laden or wet surfaces
- In totally confined joints (the sealant requires atmospheric moisture for cure)
- If the sealant is intended to be painted (paints do not typically adhere to most silicone sealants)
- To surfaces in direct contact with food or other food-grade applications

®™Trademark of The Dow Chemical Company (“Dow”) or an affiliated company of Dow

© 2017–2025 The Dow Chemical Company. All rights reserved.

Limitations (Cont.)

This product is neither tested nor represented as suitable for medical or pharmaceutical uses.

Health and Environmental Information

To support customers in their product safety needs, Dow has an extensive Product Stewardship organization and a team of product safety and regulatory compliance specialists available in each area.

For further information, please see our website, dow.com or consult your local Dow representative.

Disposal Considerations

Dispose in accordance with all local, state (provincial) and federal regulations. Empty containers may contain hazardous residues. This material and its container must be disposed in a safe and legal manner.

It is the user's responsibility to verify that treatment and disposal procedures comply with local, state (provincial) and federal regulations. Contact your Dow Technical Representative for more information.

Product Stewardship

Dow has a fundamental concern for all who make, distribute, and use its products, and for the environment in which we live. This concern is the basis for our product stewardship philosophy by which we assess the safety, health, and environmental information on our products and then take appropriate steps to protect employee and public health and our environment. The success of our product stewardship program rests with each and every individual involved with Dow products - from the initial concept and research, to manufacture, use, sale, disposal, and recycle of each product.

Customer Notice

Dow strongly encourages its customers to review both their manufacturing processes and their applications of Dow products from the standpoint of human health and environmental quality to ensure that Dow products are not used in ways for which they are not intended or tested. Dow personnel are available to answer your questions and to provide reasonable technical support. Dow product literature, including safety data sheets, should be consulted prior to use of Dow products. Current safety data sheets are available from Dow.

dow.com

NOTICE: No freedom from infringement of any patent owned by Dow or others is to be inferred. Because use conditions and applicable laws may differ from one location to another and may change with time, Customer is responsible for determining whether products and the information in this document are appropriate for Customer's use and for ensuring that Customer's workplace and disposal practices are in compliance with applicable laws and other government enactments. The product shown in this literature may not be available for sale and/or available in all geographies where Dow is represented. The claims made may not have been approved for use in all countries. Dow assumes no obligation or liability for the information in this document. References to "Dow" or the "Company" mean the Dow legal entity selling the products to Customer unless otherwise expressly noted. NO WARRANTIES ARE GIVEN; ALL IMPLIED WARRANTIES OF MERCHANTABILITY OR FITNESS FOR A PARTICULAR PURPOSE ARE EXPRESSLY EXCLUDED.

®™Trademark of The Dow Chemical Company ("Dow") or an affiliated company of Dow
DOWSIL™ 795 Silicone Building Sealant
© 2017–2025 The Dow Chemical Company. All rights reserved.

CIRRUS® High NRC
CIRRUS® High CAC & CIRRUS®

Tegular
medium texture

TOTAL ACOUSTICS®
Sound Absorption (NRC)
+ Sound Blocking (CAC)

SUSTAIN®
High Performance
Sustainable
Ceiling Systems



Cirrus Beveled Tegular panels with Suprafine XL 9/16" suspension system

CAD/Revit® drawings at:
armstrongceilings.com/cadrevit

DESIGNFlex®
A New World of Choice
for Ceiling Systems



See more photos at:
armstrongceilings.com/photogallery

Medium-texture panels offer both Sustain® and Total Acoustics® panel performance; good noise reduction and sound blocking in one panel.

KEY SELECTION ATTRIBUTES

- DesignFlex® options include made-to-order sizes available to ship in 3 weeks
- Get total noise control and floor plan versatility with Total Acoustics® ceiling panels: NRC + CAC = Total Acoustics performance
- Cirrus® panels are part of the Sustain® portfolio, and meet the most stringent industry sustainability compliance standards today
- CleanAssure™ family of products – includes disinfectable panels, suspension systems, and trim
- New colors to complement interiors
- Excellent combination of acoustical performance: NRC up to 0.75 and CAC 35
- Made in the U.S.A. of domestic and global content
- Build America, Buy America (BABA) Act compliant
- High NRC items feature Articulation Class 170 helpful to control sound over wall partitions
- Ceiling-2-Ceiling™ post-consumer recycled content options. Items 589HRC, 539HRC, 584HRC, 535HRC. 71% pre-consumer; 15% post-consumer
- Mold- and mildew-resistant surface
- USDA-Certified Biobased Product – 91%
- 10-Year replacement panel available for items 584, 589

10-YEAR REPLACEMENT PANEL AVAILABILITY

COLORS

Due to printing limitations, shade may vary from actual product.

White (WH) | Ivory (IV) | Medium Taupe (MT) | Light Grey (LG) | Grey Stone (GS) | Tech Black (BL)

Items 535, 539, 584 and 589 are available in colors. Colored ceilings are dye-lotted and should be segregated by dye lot. Do not mix.

DETAILS

(Other Suspension Systems compatible. Refer to listing on next page.)

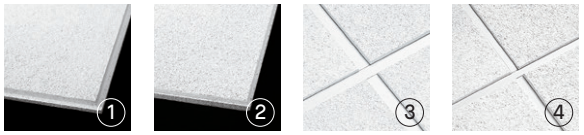

1. Cirrus® Angled Tegular
2. Cirrus® Beveled Tegular
3. Cirrus® Angled Tegular with Prelude® XL® 15/16" suspension system
4. Cirrus® Beveled Tegular with Suprafine® XL® 9/16" suspension system

CIRRUS® High NRC

Tegular
medium texture

USDA CERTIFIED BIOBASED PRODUCT PRODUCT 91%

SUSTAIN® High Performance Sustainable Ceiling Systems

Declare.

LEED® | WELL™ | LBC

UP TO 73% RECYCLED CONTENT

Calculate sustainability with Ecomedes armstrongceilings.com/ecomedes

energy management · construction waste mgmt · regional materials ▲ · design for flexibility · EPD · recyclable/ extended producer resp. · biobased materials · recycled content · sourcing of raw materials · material ingredient reporting · low emitting/ materials · lighting quality · acoustics

▲ LOCATION DEPENDENT

VISUAL SELECTION

PERFORMANCE SELECTION

Dots represent high level of performance. $$$$

armstrongceilings.com/suspdwgs	Susp. Dwg.	Item No.	Dimensions (Inches)	UL Classified Acoustics NRC + CAC = NRC + CAC	Total Acoustics[1]	Articulation Class	Fire Performance	Light Reflect	Bio-Block Anti-Mold/ Mildew	Humi-Guard+ Sag Resistant	Certified Low VOC Emissions	CleanAssure™ Disinfectable Panels Fog	Durability	Recycle Program	30-Yr Warranty
CIRRUS® High NRC 15/16" Angled Tegular	13	**556**	24 × 24 × 7/8"	0.75 • + 35 • = BETTER	170 •	Class A	0.84 •	•	•	•	•	Std	•	•
		551	24 × 48 × 7/8"	0.75 • + 35 • = BETTER	170 •	Class A	0.84 •	•	Std	•	•	Std	•	10-Yr
9/16" Beveled Tegular	29, 44, 48, 52, 56	**558**	24 × 24 × 7/8"	0.75 • + 35 • = BETTER	170 •	Class A	0.84 •	•	•	•	•	Std	•	•
		568	24 × 48 × 7/8"	0.75 • + 35 • = BETTER	170 •	Class A	0.84 •	•	Std	•	•	Std	•	10-Yr
			7/8" Thick – 15/16" Angled Tegular & 9/16" Beveled Tegular												
Made-to-Order Sizes Made-to-Order panel options have a minimum order quantity of 500 SF 3-4 WEEKS order to ship		Width: 12" - 24"	Length: 24" - 48"	N/A	N/A	N/A	N/A	Class A	0.84 •	•	Std	•	•	Std	•	10-Yr

MORE ITEMS ▶

[1] Total Acoustics® ceiling panels have an ideal combination of sound absorption and sound blocking in one product.
GOOD (NRC 0.60-0.65; CAC 35+) **BETTER** (NRC 0.70-0.75; CAC 35+) **BEST** (NRC 0.80+; CAC 35+)

SUSPENSION SYSTEMS

15/16"



Prelude®

9/16"

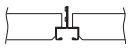

Silhouette® 1/4" Reveal



Silhouette 1/8" Reveal

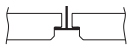

Suprafine® Suprafine® XL® Fire Guard™



Interlude® XL® HRC

PHYSICAL DATA

Material
Wet-formed mineral fiber

Surface Finish
Factory-applied latex paint

Fire Performance
Class A: ASTM E84 and CAN/ULC S102 surface burning characteristics. Flame Spread Index of 25 or less. Smoke Developed Index of 50 or less (UL® labeled).

ASTM E1264 Classification
Type A, Form A1.2, Pattern F; Fire Class A

Humidity/Sag Resistance
HumiGuard® Plus ceiling panels are recommended for areas subject to high humidity, up to, but not including, standing water and outdoor applications.

Anti-Mold/Mildew
Ceiling tiles with BioBlock® performance resist the growth of mold and mildew on the tile surface.

VOC Emissions
Third-party certified compliant with California Department of Public Health CDPH/EHLB/Standard Method Version 1.2, 2017. This standard is the guideline for low emissions in LEED®, WELL Building Standard™, Living Building Challenge® (LBC), CalGreen Title 24, ANSI/ASHRAE/ USGBC/IES Standard 189; ANSI/GBI Green Building Assessment Protocol.

Acoustic Performance
CAC testing conducted using Silhouette suspension system.

High Recycled Content
Contains greater than 50% total recycled content. Total recycled content based on product composition of post-consumer and pre-consumer (post-industrial) recycled content per FTC guidelines.

Insulation Value
R Factor – 1.9 (BTU units)
R Factor – 0.33 (Watts units)

Cleaning and Disinfecting
Cleaning and CDC-recommended disinfecting options available on armstrongceilings.com/cleaning

30-Year Performance Guarantee & Warranty
When installed with Armstrong® Suspension System. Details at armstrongceilings.com/warranty

Weight; Square Feet/Carton
551 – 1.21 LBS/SF; 48 SF/CTN
556, 558 – 1.40 LBS/SF; 40 SF/CTN
568 – 1.25 LBS/SF; 48 SF/CTN

Metric Items Available
551M, 558M, 568M – Metric items are subject to extended lead times and minimum quantities. Contact your representative for more details.

CIRRUS®

Tegular
medium texture

USDA CERTIFIED BIOBASED PRODUCT PRODUCT 91%

CLOSED LOOP RECYCLED CONTENT CEILING-2-CEILING

SUSTAIN® High Performance Sustainable Ceiling Systems

Declare.

LEED® WELL™ LBC

UP TO 77% RECYCLED CONTENT

Calculate sustainability with Ecomedes armstrongceilings.com/ecomedes

energy management · construction waste mgmt · regional materials · design for flexibility · EPD · recyclable/ extended producer resp. · biobased materials · recycled content · sourcing of raw materials · material ingredient reporting · low emitting/ materials · lighting quality · acoustics

▲ LOCATION DEPENDENT

VISUAL SELECTION

PERFORMANCE SELECTION

Dots represent high level of performance.

$$$$

armstrongceilings.com/suspdwgs	Susp. Dwg.	Item No.	Dimensions (Inches)		UL Classified Acoustics NRC	UL Classified Acoustics CAC	Total Acoustics[1]	Articulation Class	Fire Performance	Light Reflect	Bio-Block Anti-Mold/ Mildew	Humi-Guard+ Sag Resistant	Certified Low VOC Emissions	CleanAssure™ Disinfectable Panels Fog	Durability	Recycle Program	30-Yr Warranty
CIRRUS® 9/16" Beveled Tegular	29, 44, 48, 52, 56	**589_ _◆** **589HRC**	24 × 24 × 3/4" 24 × 24 × 3/4"	☐	0.70 •	35 •	BETTER	N/A	Class A	0.85* •	•	•	•	•	Std	•	•
		538	24 × 24 × 7/8"	☐	0.70 •	38 •	BETTER	N/A	Class A	0.85 •	•	•	•	•	Std	•	•
		577	24 × 24 × 3/4"	☐	0.35	35 •	N/A	N/A	Fire Guard™	0.85 •	•	•	•	•	Std	•	•
		539_ _◆ **539HRC**	24 × 48 × 3/4" 24 × 48 × 3/4"	▭	0.70 •	35 •	BETTER	N/A	Class A	0.85* •	•	Std	•	•	Std	•	•
15/16" Angled Tegular	13	**584_ _◆** **584HRC**	24 × 24 × 3/4" 24 × 24 × 3/4"	☐	0.70 •	35 •	BETTER	N/A	Class A	0.85* •	•	•	•	•	Std	•	•
		578	24 × 24 × 3/4"	☐	0.35	35 •	N/A	N/A	Fire Guard	0.85 •	•	•	•	•	Std	•	•
		534	24 × 24 × 7/8"	☐	0.70 •	38 •	BETTER	N/A	Class A	0.85 •	•	•	•	•	Std	•	•
		535_ _◆ **535HRC**	24 × 48 × 3/4" 24 × 48 × 3/4"	▭	0.70 •	35 •	BETTER	N/A	Class A	0.85* •	•	Std	•	•	Std	•	•

Red Numbers are Fire Guard items.

[1] Total Acoustics® ceiling panels have an ideal combination of sound absorption and sound blocking in one product.
GOOD (NRC 0.60-0.65; CAC 35+) **BETTER** (NRC 0.70-0.75; CAC 35+) **BEST** (NRC 0.80+; CAC 35+)

* White only

◆ Add 2-letter color suffix to item number when specifying or ordering (e.g., 839 L G).

PHYSICAL DATA

Material
Wet-formed mineral fiber

Surface Finish
Factory-applied latex paint

Fire Performance
Class A ASTM E84 and CAN/ULC S102 surface burning characteristics. Flame Spread Index of 25 or less. Smoke Developed Index of 50 or less (UL® labeled).

Fire Guard™: A fire-resistive ceiling when used in applicable UL assemblies (Class A)

ASTM E1264 Classification
Type A, Form A1.2, Pattern F; Fire Class A

Humidity/Sag Resistance
HumiGuard® Plus ceiling panels are recommended for areas subject to high humidity, up to, but not including, standing water and outdoor applications.

Design Considerations
Color ceilings are dye-lotted and should be segregated by dye lot. Do not mix. Coordinating suspension system colors are available.

Anti-Mold/Mildew
Ceiling tiles with BioBlock® performance resist the growth of mold and mildew on the tile surface.

VOC Emissions
Third-party certified compliant with California Department of Public Health CDPH/EHLB/Standard Method Version 1.2, 2017. This standard is the guideline for low emissions in LEED®, WELL Building Standard™, Living Building Challenge® (LBC), CalGreen Title 24, ANSI/ASHRAE/USGBC/IES Standard 189; ANSI/GBI Green Building Assessment Protocol.

Acoustic Performance
CAC testing conducted using Silhouette® suspension system.

High Recycled Content
Contains greater than 50% total recycled content. Total recycled content based on product composition of post-consumer and pre-consumer (post-industrial) recycled content per FTC guidelines. HRC items contain 15% or greater post-consumer recycled ceilings.

Insulation Value
R Factor – 1.9 (BTU units)
R Factor – 0.33 (Watts units)

Cleaning and Disinfecting
Cleaning and CDC recommended disinfecting options available on armstrongceilings.com/cleaning

30-Year Performance Guarantee & Warranty
When installed with Armstrong® Suspension System. Details at armstrongceilings.com/warranty

Weight; Square Feet/Carton
534, 538 – 1.38 lbs/SF; 40 SF/ctn
535, 535HRC, 539, 539HRC – 1.21 lbs/SF; 48 SF/ctn
577, 578 – 1.25 lbs/SF; 48 SF/ctn
584, 584HRC, 589, 589HRC – 1.06 lbs/SF; 48 SF/ctn

Minimum Order Quantity
1 carton

Metric Items Available
584M, 578M, 534M, 572M, 581M, 535M, 589M, 538M, 577M, 583M, 539M – Metric items are subject to extended lead times and minimum quantities. Contact your representative for more details.

MINERAL FIBER – Standard

CIRRUS® High CAC

Tegular
medium texture

USDA CERTIFIED BIOBASED PRODUCT
PRODUCT 91%

SUSTAIN® High Performance Sustainable Ceiling Systems

Declare.

LEED® | WELL™ | LBC

UP TO 73% RECYCLED CONTENT

Calculate sustainability with Ecomedes armstrongceilings.com/ecomedes

energy management · construction waste mgmt · regional materials · design for flexibility · EPD · recyclable/ extended producer resp. · biobased materials · recycled content · sourcing of raw materials · material ingredient reporting · low emitting/ materials · lighting quality · acoustics

▲ LOCATION DEPENDENT

VISUAL SELECTION

PERFORMANCE SELECTION

Dots represent high level of performance. $$$$

armstrongceilings.com/suspdwgs	Susp. Dwg.	Item No.	Dimensions (Inches)		UL Classified Acoustics NRC	+ CAC	= Total Acoustics[1] NRC + CAC	Articulation Class	Fire Performance	Light Reflect	Bio-Block Anti-Mold/ Mildew	Humi-Guard+ Sag Resistant	Certified Low VOC Emissions	CleanAssure™ Disinfectable Panels Fog	Durability	Recycle Program	30-Yr Warranty
CIRRUS® High CAC 15/16" Angled Tegular	13	**572**	24 × 24 × 7/8"	☐	0.70 •	40 •	BETTER	N/A	Class A	0.85 •	•	•	•	•	Std	•	•
		581	24 × 48 × 7/8"	▭	0.70 •	40 •	BETTER	N/A	Class A	0.85 •	•	Std	•	•	Std	•	10-Yr
9/16" Beveled Tegular	29, 44, 48, 52, 56	**576**	24 × 24 × 7/8"	☐	0.70 •	40 •	BETTER	N/A	Class A	0.85 •	•	•	•	•	Std	•	•
		583	24 × 48 × 7/8"	▭	0.70 •	40 •	BETTER	N/A	Class A	0.85 •	•	Std	•	•	Std	•	10-Yr
		3/4" Thick – 15/16" Angled Tegular & 9/16" Beveled Tegular															
Made-to-Order Sizes Made-to-Order panel options have a minimum order quantity of 500 SF		Width	Length		N/A	N/A	N/A	N/A	Class A	0.85 •	•	Std	•	•	Std	•	10-Yr
		12" - 24"	24" - 48"														

3-4 WEEKS order to ship

[1] Total Acoustics® ceiling panels have an ideal combination of sound absorption and sound blocking in one product.
GOOD (NRC 0.60-0.65; CAC 35+) **BETTER** (NRC 0.70-0.75; CAC 35+) **BEST** (NRC 0.80+; CAC 35+)

SUSPENSION SYSTEMS

15/16"



Prelude®
Prelude® XL®
Fire Guard™

9/16"

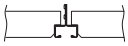

Silhouette®
1/4" Reveal



Silhouette
1/8" Reveal



Suprafine®
Suprafine® XL®
Fire Guard™

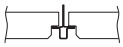

Interlude® XL® HRC

PHYSICAL DATA

Material
Wet-formed mineral fiber

Surface Finish
Factory-applied latex paint

Fire Performance
Class A ASTM E84 and CAN/ULC S102 surface burning characteristics. Flame Spread Index of 25 or less. Smoke Developed Index of 50 or less (UL® labeled).

Fire Guard™: A fire-resistive ceiling when used in applicable UL assemblies (Class A)

ASTM E1264 Classification
Type A, Form A1.2, Pattern F; Fire Class A

Humidity/Sag Resistance
HumiGuard® Plus ceiling panels are recommended for areas subject to high humidity, up to, but not including, standing water and outdoor applications.

Design Considerations
Color ceilings are dye-lotted and should be segregated by dye lot. Do not mix. Coordinating suspension system colors are available.

Anti-Mold/Mildew
Ceiling tiles with BioBlock® performance resist the growth of mold and mildew on the tile surface.

VOC Emissions
Third-party certified compliant with California Department of Public Health CDPH/EHLB/Standard Method Version 1.2, 2017. This standard is the guideline for low emissions in LEED®, WELL Building Standard™, Living Building Challenge® (LBC), CalGreen Title 24, ANSI/ASHRAE/USGBC/IES Standard 189; ANSI/GBI Green Building Assessment Protocol.

Acoustic Performance
CAC testing conducted using Silhouette® suspension system.

High Recycled Content
Contains greater than 50% total recycled content. Total recycled content based on product composition of post-consumer and pre-consumer (post-industrial) recycled content per FTC guidelines. HRC items contain 15% or greater post-consumer recycled ceilings.

Insulation Value
R Factor – 1.9 (BTU units)
R Factor – 0.33 (Watts units)

Cleaning and Disinfecting
Cleaning and CDC-recommended disinfecting options available on armstrongceilings.com/cleaning

30-Year Performance Guarantee & Warranty
When installed with Armstrong® Suspension System. Details at armstrongceilings.com/warranty

Weight; Square Feet/Carton
572, 576 – 1.38 LBS/SF; 40 SF/CTN
581, 583 – 1.21 LBS/SF; 48 SF/CTN

Minimum Order Quantity
1 carton

Metric Items Available
572M, 581M, 583M – Metric items are subject to extended lead times and minimum quantities. Contact your representative for more details.

TechLine / 1 877 276-7876
armstrongceilings.com/cirrus

BPCS-3012-924

LEED® is a trademark of the U.S. Green Building Council; Declare® and Living Building Challenge® (LBC) are registered trademarks of the International Living Future Institute®; WELL™ and WELL Building Standard are trademarks of the International WELL Building Institute; UL is a registered trademark of UL LLC; Revit® is a registered trademark of Autodesk, Inc.; all other trademarks used herein are the property of AWI Licensing LLC and/or its affiliates
© 2024 AWI Licensing LLC

Armstrong® World Industries

Technical Data Sheet

DOWSIL™ ALLGUARD Silicone Elastomeric Coating

Water-based silicone elastomer for waterproofing above-grade exterior masonry substrates

Features & Benefits

- Offers long-term waterproofing protection
- Maintains water protection properties even when exposed to sunlight, rain, snow, or temperature extremes

Composition

- One-component, pigmented, water-based silicone elastomer

Applications

- DOWSIL™ ALLGUARD Silicone Elastomeric Coating is designed to waterproof above-grade exterior masonry substrates, such as concrete block, fluted block, brick, stucco, synthetic stucco, poured concrete, precast concrete, exterior insulation finish systems (EIFS), and previously coated masonry substrates.

Typical Properties

Specification Writers: These values are not intended for use in preparing specifications.

Test[1]	Property	Unit	Result
ASTM D 2369	Solids Content	% by weight % by volume	58.6 50.1
ASTM D 1475	Specific Gravity	lb/gal (kg/L)	9.64 (1.155)
ASTM D 2196	Viscosity[2]	cps (Pa s)	37,500 (37.5)
ASTM D 1849	High Temperature Stability (no change in viscosity)	days	> 28
EPA Method 24	Volatile Organic Content[3] (VOC)	g/L (lb/gal)	< 50 (< 0.42)
	As Cured		
ASTM D 2240	Durometer Hardness, Shore A	points	38
ASTM D 412	Tensile Strength	psi (MPa)	> 145 (1.00)
ASTM D 412	Elongation	%	600
ASTM D 1653	Permeance	English perms (ng/(m^2.Pa.s))	43.2 (2480)

1. ASTM: American Society of Testing and Materials.
   EPA: Environmental Protection Agency
2. Brookfield HAV, spindle #3, 2 rpm.
3. VOC includes all approved colors (EPA method 24 or 40 CFR 59.406 data).

®™Trademark of The Dow Chemical Company ("Dow") or an affiliated company of Dow
DOWSIL™ ALLGUARD Silicone Elastomeric Coating
© 2017–2024 The Dow Chemical Company. All rights reserved.

Typical Properties (Cont.)

Test	Property	Unit	Result
ASTM D 522	Room Temperature, Flex, 1/8” mandrel		Pass
ASTM C 711	Low Temperature Flex, 1/4" mandrel		Pass
ASTM D 3274	Fungus Resistance		No growth
ASTM D 6904	Wind Driven Rain[4]		Pass
ASTM D 2243	Freeze/Thaw Resistance		No Change

4. Measured on coating system with two coats (10 mil dry film thickness) of DOWSIL™ ALLGUARD Silicone Elastomeric Coating.

Description

DOWSIL™ ALLGUARD Silicone Elastomeric Coating is a one-part, 100% water-based silicone elastomer supplied in three tint bases for pigmenting at distributor locations. The coating is typically applied in two coats. The use of DOWSIL™ ALLGUARD Primer may be necessary based on the substrate. The coating can be roller, brush, or spray applied. It cures to form a flexible membrane that is impervious to water but has the ability to “breathe,” allowing water vapor to escape from inside the substrate. Its matte finish minimizes brush and roller marks. The coating offers long-term waterproofing protection, withstanding hurricane-force, wind-driven rain; normal movement imposed by seasonal thermal contraction and expansion; ultraviolet (UV) radiation; and the elements. The coating maintains its water protection properties even when exposed to sunlight, rain, snow or temperature extremes.

Once pigmented, it is a ready-to-use material that can be applied between -6°C (20°F) and 38°C (100°F) to a clean, dry surface. The average drying time is 4 to 8 hours, depending upon temperature, humidity, and wind conditions. If the temperature drops below -6°C (20°F) after the coating is applied, the average drying time will increase. DOWSIL™ ALLGUARD Elastomeric Coating requires temperatures higher than -6°C (20°F) for a cumulative total of 24 hours to dry.

DOWSIL™ ALLGUARD Silicone Elastomeric Coating will attain full adhesion and physical properties in 7 to 14 days.

DOWSIL™ ALLGUARD Silicone Elastomeric Coating is available in more than 55 standard colors or can be custom colored to order.

How to Use

When properly applied and cured, DOWSIL™ ALLGUARD Silicone Elastomeric Coating offers a fast, easy, and effective method of keeping exterior above-grade surfaces waterproof.

Design Considerations

In many building designs, areas such as ledges and windowsills allow airborne dirt and soot to accumulate. Surfaces exposed to concentrated water run-down may appear dirty or streaky over time and the coating may become difficult to clean. In those areas, drip edges should be installed before the coating is applied to rechannel water away from the surface to protect the long-term appearance of the façade.

®™Trademark of The Dow Chemical Company (“Dow”) or an affiliated company of Dow

© 2017–2024 The Dow Chemical Company. All rights reserved.

How to Use (Cont.)

Design Considerations (Cont.)
The success of a drip edge is achieved by moving the runoff water away from the wall onto the drip edge, creating a non-uniform runoff.

A drip edge can be fabricated from the same material as the windowsills or from other formable composites. The drip edge can be mechanically adhered to the substrate or attached with DOWSIL™ 795 Silicone Building Sealant (see Figure 1).

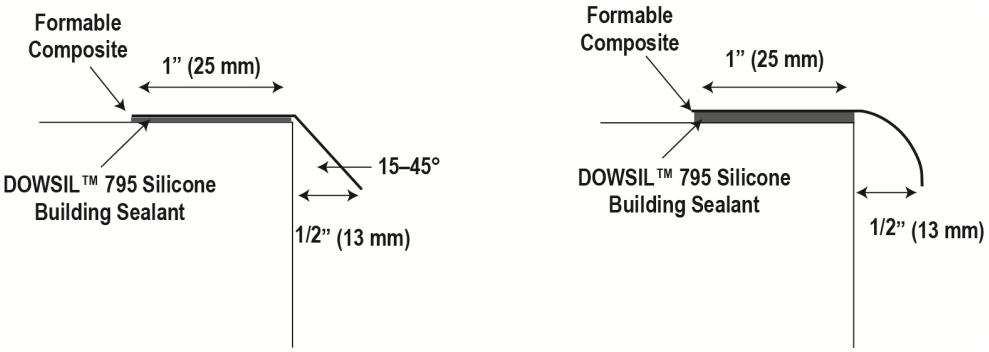

Figure 1: Drip Edge Design Consideration

Surface Preparation
All surfaces to be coated with DOWSIL™ ALLGUARD Silicone Elastomeric Coating must be prepared as described in the most recent DOWSIL™ ALLGUARD Silicone Elastomeric Coating Application and Maintenance Guide (Form No. 62-617). The following is a short reference guide for surface preparations.

All surfaces must be clean and free of dirt, frost, dust, oil, grease, mold, fungus, efflorescence, laitance, peeling coating, chalking coating, and any other foreign material. Green concrete must be allowed to cure 28 days before application of DOWSIL™ ALLGUARD Silicone Elastomeric Coating (see "Limitations"). Pressure clean, wire brush, or grind the wall surface to remove all of the above materials. Repair any damaged concrete, stucco, block, brick, masonry, or EIFS. Repair cracks larger than 1/16" (1.6 mm) with a material that is compatible with the substrate and DOWSIL™ ALLGUARD Silicone Elastomeric Coating. DOWSIL™ 790 Silicone Building Sealant or DOWSIL™ 795 Silicone Building Sealant or DOWSIL™ 791 Silicone Weatherproofing Sealant can be used for crack repairs.

®™Trademark of The Dow Chemical Company ("Dow") or an affiliated company of Dow

© 2017–2024 The Dow Chemical Company. All rights reserved.

How to Use (Cont.)

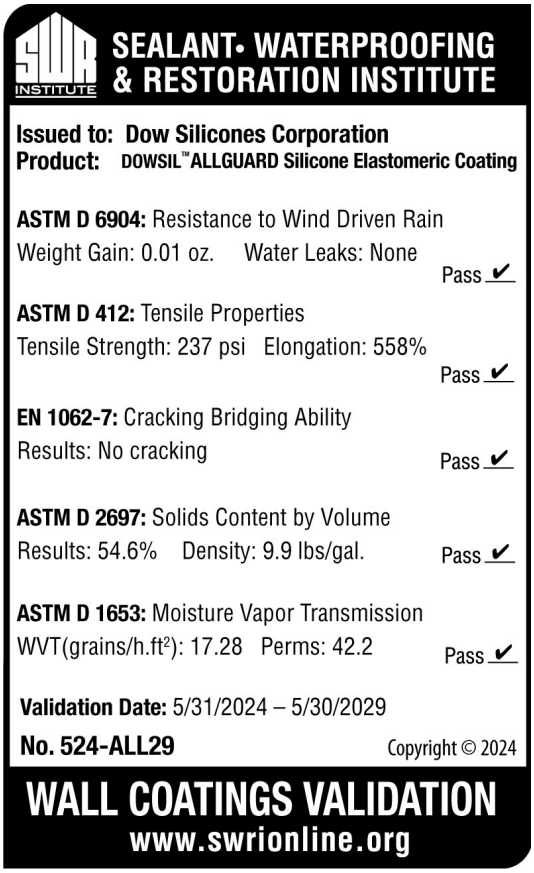

Coating

A minimum of two coats of DOWSIL™ ALLGUARD Silicone Elastomeric Coating are necessary to achieve the required 10 mil (0.25 mm) minimum dry film thickness to attain protection against through-water penetration and to qualify for a project-specific warranty.

Apply the coating in a 10 mil (0.25 mm) wet thickness (a job-specific mockup is recommended to determine actual usage). Due to DOWSIL™ ALLGUARD Silicone being 50% solids, two thick wet coats (10- to 12-mil [0.25 to 0.30 mm]) will result in the required 10-mil (0.25 mm) dry coating thickness. On occasion, a third coat may be necessary on porous or rough surfaces to achieve the minimum dry film thickness.

Apply using a ¾ to 1½" (19 to 38 mm) nap, polyester, or 50/50 polyester/wool blend roller cover, nylon bristle brush, or airless sprayer. When applying the coating with a roller, apply it in a fan pattern to achieve uniform thickness. Always finish roller applications in the same direction to reduce visual surface texture differences. When applying with an airless sprayer, follow the spray application with a back roll of material to help ensure a uniform coating and appearance.

Allow the coating to dry (typically 2 to 4 hours) before applying additional coats. Note: Do **not** thin or cut back DOWSIL™ ALLGUARD Silicone Elastomeric Coating.

After the additional coat has been applied, the average drying time is 4 to 8 hours, depending upon temperature, humidity, and wind conditions. DOWSIL™ ALLGUARD Silicone Elastomeric Coating will attain full adhesion and physical properties in 7 to 14 days.

®™Trademark of The Dow Chemical Company ("Dow") or an affiliated company of Dow

© 2017–2024 The Dow Chemical Company. All rights reserved.

How to Use (Cont.)

Low Temperature Application
If temperatures drop below -6°C (20°F), the coating will freeze on the surface until the temperature increases. This will not affect the cured properties of the coating but will extend the drying time.

The coating should be dry to touch, not simply freeze between coats. Application equipment such as rollers and the tips of spraying equipment should be kept above 0°C (32°F) when not in use.

DOWSIL™ ALLGUARD Silicone Elastomeric Coating was developed to obtain good adhesion to the substrate without the need of a primer. To verify that this adhesion is sufficient, field adhesion tests must be performed as described in the DOWSIL™ ALLGUARD Silicone Elastomeric Coating Application and Maintenance Guide. If adhesion does not conform to requirements, a field adhesion test with primer should be performed. To obtain a project-specific warranty, field adhesion testing, conforming to the requirements, must be performed and documented. Surface adhesion tests on each type of substrate and each face of the structure must be field adhesion tested and acceptable per the DOWSIL™ ALLGUARD Silicone Elastomeric Coating Application and Maintenance Guide.

Maintenance
Walls should be inspected at least once a year. If coating becomes damaged, repair damaged portion to maintain weatherproofing performance. Any touch-ups or repairs to the coating can be completed by applying DOWSIL™ ALLGUARD Silicone Elastomeric Coating to the clean, dry area in accordance with the recommendations in this data sheet and the DOWSIL™ ALLGUARD Silicone Elastomeric Coating Application and Maintenance Guide.

Dow recommends routine cleaning to minimize dirt accumulation, following these guidelines:

1. Abrasive cleaners and cleaning equipment should never be used.
2. Clean using pressurized water and a basic cleaning agent such as TSP (Trisodium Phosphate)[1] or Simple Green. Water pressure should not exceed 1,500 psi (10.3 MPa) to clean the surface without removing the coating material from the wall surface. A small test patch should be done first to determine how long the cleaning agent should be left on the surface before rinsing.
3. Removal of stubborn marks may require the use of a soft bristle brush with the cleaning solution. Avoid stiff brushes that may abrade the coating.

[1]Follow solvent manufacturer's recommended safe handling instructions and applicable federal, state, and local laws.

Recoating
Dow offers a 10-year extended waterproofing performance warranty for reapplication (one 14-mil wet coat/7-mil dry coat) after the initial warranty period, subject to terms and restrictions.

Handling Precautions

PRODUCT SAFETY INFORMATION REQUIRED FOR SAFE USE IS NOT INCLUDED IN THIS DOCUMENT. BEFORE HANDLING, READ PRODUCT AND SAFETY DATA SHEETS AND CONTAINER LABELS FOR SAFE USE, PHYSICAL AND HEALTH HAZARD INFORMATION. THE SAFETY DATA SHEET IS AVAILABLE ON THE DOW WEBSITE AT DOW.COM, OR FROM YOUR DOW SALES APPLICATION ENGINEER, OR DISTRIBUTOR, OR BY CALLING DOW CUSTOMER SERVICE.

®™Trademark of The Dow Chemical Company ("Dow") or an affiliated company of Dow

© 2017–2024 The Dow Chemical Company. All rights reserved.

Usable Life and Storage

Protect DOWSIL™ ALLGUARD Silicone Elastomeric Coating and DOWSIL™ ALLGUARD Primer from freezing. Store in a cool, dry place out of the weather. When properly stored in its original, unopened container above 1°C (34°F) and below 32°C (90°F), DOWSIL™ ALLGUARD Silicone Elastomeric Coating and DOWSIL™ ALLGUARD Primer have shelf lives of 9 months and 18 months, respectively, from date of manufacture. Refer to product packaging for "Use by Date."

If DOWSIL™ ALLGUARD Silicone Elastomeric Coating is stored at temperatures below -6°C (20°F) for longer than 8 hours, the coating will start to freeze. Allow the DOWSIL™ ALLGUARD Silicone Elastomeric Coating to sit at temperatures greater than 20°F for at least 8 hours or until the material thaws before application.

Packaging Information

DOWSIL™ ALLGUARD Silicone Elastomeric Coating and DOWSIL™ ALLGUARD Primer are available in 5 gal (19 L) pails (42 to 46 lb [19 to 21 kg] per pail depending on color).

Limitations

DOWSIL™ ALLGUARD Silicone Elastomeric Coating should **not** be applied:

- When there is a threat of rain within the next 24 hours or the relative humidity is in excess of 90% (because conditions would not permit complete surface drying)
- On below-grade applications
- On non-masonry substrates such as metal, wood, plastic, or asphaltic materials, or on tar-contaminated masonry
- As a decorative paint (DOWSIL™ ALLGUARD Silicone Elastomeric Coating is not warranted for aesthetics)
- On newly applied or green cementitious materials; industry guidelines recommend at least 28 days' cure before painting or coating the substrates (see SSPC, 2010 Painting Manual, Chapter 3.1. Concrete Surface Preparation)

This product is neither tested nor represented as suitable for medical or pharmaceutical uses.

Health and Environmental Information

To support customers in their product safety needs, Dow has an extensive Product Stewardship organization and a team of product safety and regulatory compliance specialists available in each area.

For further information, please see our website, **dow.com**, or consult your local Dow representative.

Disposal Considerations

Dispose in accordance with all local, state (provincial) and federal regulations. Empty containers may contain hazardous residues. This material and its container must be disposed in a safe and legal manner.

It is the user's responsibility to verify that treatment and disposal procedures comply with local, state (provincial) and federal regulations. Contact your Dow Technical Representative for more information.

Product Stewardship

Dow has a fundamental concern for all who make, distribute, and use its products, and for the environment in which we live. This concern is the basis for our product stewardship philosophy by which we assess the safety, health, and environmental information on our products and then take appropriate steps to protect employee and public health and our environment. The success of our product stewardship program rests with each and every individual involved with Dow products - from the initial concept and research, to manufacture, use, sale, disposal, and recycle of each product.

®™Trademark of The Dow Chemical Company ("Dow") or an affiliated company of Dow
DOWSIL™ ALLGUARD Silicone Elastomeric Coating

© 2017–2024 The Dow Chemical Company. All rights reserved.

Customer Notice

Dow strongly encourages its customers to review both their manufacturing processes and their applications of Dow products from the standpoint of human health and environmental quality to ensure that Dow products are not used in ways for which they are not intended or tested. Dow personnel are available to answer your questions and to provide reasonable technical support. Dow product literature, including safety data sheets, should be consulted prior to use of Dow products. Current safety data sheets are available from Dow.

dow.com

NOTICE: No freedom from infringement of any patent owned by Dow or others is to be inferred. Because use conditions and applicable laws may differ from one location to another and may change with time, Customer is responsible for determining whether products and the information in this document are appropriate for Customer's use and for ensuring that Customer's workplace and disposal practices are in compliance with applicable laws and other government enactments. The product shown in this literature may not be available for sale and/or available in all geographies where Dow is represented. The claims made may not have been approved for use in all countries. Dow assumes no obligation or liability for the information in this document. References to "Dow" or the "Company" mean the Dow legal entity selling the products to Customer unless otherwise expressly noted. NO WARRANTIES ARE GIVEN; ALL IMPLIED WARRANTIES OF MERCHANTABILITY OR FITNESS FOR A PARTICULAR PURPOSE ARE EXPRESSLY EXCLUDED.

NOTE: DOWSIL™ ALLGUARD Silicone Elastomeric Coating is NOT warranted for use on single-family residential dwellings.

®™Trademark of The Dow Chemical Company ("Dow") or an affiliated company of Dow
DOWSIL™ ALLGUARD Silicone Elastomeric Coating
© 2017–2024 The Dow Chemical Company. All rights reserved.

Form No. 62-048-01-1124 S2D

FLAGLER EXECUTIVE AIRPORT

FLAGLER COUNTY, FLORIDA

BID DRAWINGS

AIR TRAFFIC CONTROL TOWER REHABILITATION

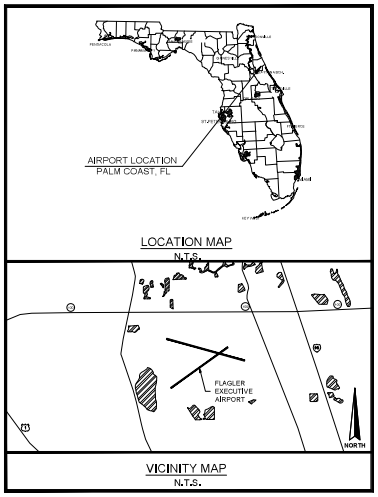

LOCATION MAP
N.T.S.

VICINITY MAP
N.T.S.



PROJECT MAP
N.T.S.

BID DRAWINGS

FAA AIP NO.	X-XX-XXXXX-XX-XX
FDOT FM NO.	XXXXXX-X-XX-XX
FLAGLER COUNTY PROJ. NO.	26-ITB-018
PROJECT NO.	**2026.355.03**
DATE	**JULY 2026**

REVISIONS

NO.	DATE	DESCRIPTION

PLANS PREPARED BY:

AVCON

AVCON, INC.
ENGINEERS & PLANNERS
5555 EAST MICHIGAN ST, SUITE 200 – ORLANDO, FLORIDA 32822
OFFICE: (407) 599-1122 - FAX: (407) 599-1133
www.avconinc.com

This item has been digitally signed and sealed by Daniel J. Nickols, Jr., P.E., on the date adjacent to the seal. Signature must be verified on any electronic copies.

JOSEPH NICKOLS JR. LICENSE No 78634 STATE OF FLORIDA PROFESSIONAL ENGINEER

Daniel Nickols JR

FLAGLER EXECUTIVE AIRPORT
Where Service Soars
FIN

GI001

XREFS: 2026.355.03_Title Block 2025.355.02_Basemap
V:\2026\2026.355.03 – FIN ATCT Rehab\2026.355.03 – CADD\2026.355.03_GI Series.dwg7/24/2026 [illegible]:25 PM

SHEET NOTES

1. LOCATIONS, ELEVATIONS, AND DIMENSIONS OF EXISTING UTILITIES, STRUCTURES AND OTHER FEATURES ARE SHOWN ACCORDING TO THE BEST INFORMATION AVAILABLE AT THE TIME OF PREPARATION OF THESE PLANS. THE CONTRACTOR SHALL FIELD LOCATE, VERIFY, AND FURTHER IDENTIFY THE LOCATIONS, ELEVATIONS, AND DIMENSIONS OF ALL EXISTING UTILITIES, STRUCTURES, AND OTHER FEATURES (IDENTIFIED ON THE PLANS OR NOT) AFFECTING ANY COMPONENT OF WORK HEREIN PRIOR TO THE START OF ANY CONSTRUCTION. DISCREPANCIES, CONFLICTS, OR POTENTIAL DEVIATIONS SHALL BE BROUGHT TO THE ATTENTION OF THE ENGINEER PRIOR TO THE START OF ANY CONSTRUCTION.
2. THE CONTRACTOR SHALL CHECK PLANS FOR CONFLICTS AND DISCREPANCIES PRIOR TO THE START OF ANY CONSTRUCTION. SPECIAL ATTENTION SHALL BE TAKEN WITH THOSE EXISTING UTILITIES, STRUCTURES OR FEATURES (IDENTIFIED ON THE PLANS OR NOT) THAT MAY POTENTIALLY CONFLICT OR CROSS PROPOSED DESIGN COMPONENTS (I.E., AIRFIELD ELECTRICAL, STORM SEWERS, SANITARY SEWERS, WATER MAINS, COMMUNICATION LINES, HIGH POWER TRANSMISSION LINES, BUILDING FOUNDATIONS, ETC) AND ANY DISCREPANCIES, CONFLICTS, OR POTENTIAL DEVIATIONS SHALL BE BROUGHT TO THE ATTENTION OF THE ENGINEER PRIOR TO THE START OF ANY CONSTRUCTION. ANY COST ASSOCIATED WITH THE LOCATION OF EXISTING UTILITIES AS OUTLINED ABOVE IS THE RESPONSIBILITY OF THE CONTRACTOR.
3. ERRORS OR OMISSIONS - DO NOT TAKE ADVANTAGE OF ANY APPARENT ERROR OR OMISSION DISCOVERED IN THE CONTRACT DOCUMENTS, BUT IMMEDIATELY NOTIFY THE ENGINEER OF SUCH DISCOVERY. THE ENGINEER WILL THEN MAKE SUCH CORRECTIONS AND INTERPRETATIONS AS NECESSARY TO REFLECT THE ACTUAL SPIRIT AND INTENT OF THE CONTRACT DOCUMENTS.
4. THE CONTRACTOR SHALL EXERCISE EXTREME CAUTION IN AREAS OF BURIED UTILITIES AND SHALL PROVIDE AT LEAST 48-HOURS NOTICE TO THE UTILITY COMPANIES PRIOR TO CONSTRUCTION TO OBTAIN FIELD LOCATIONS OF EXISTING UNDERGROUND UTILITIES.
5. THE CONTRACTOR IS RESPONSIBLE FOR REPAIRING ANY DAMAGE TO EXISTING FACILITIES, ABOVE OR BELOW GROUND, THAT MAY OCCUR AS A RESULT OF THE WORK PERFORMED BY THE CONTRACTOR CALLED FOR IN THIS CONTRACT. CONTRACTOR SHALL BE RESPONSIBLE FOR PROTECTING ALL EXISTING SURVEY MONUMENTATION, AND ANY DISTURBED MONUMENTATION SHALL BE RESTORED AT CONTRACTOR'S EXPENSE BY A SURVEYOR SELECTED BY THE OWNER.
6. ALL UNDERGROUND UTILITIES MUST BE IN PLACE AND PASS ALL TESTING OR INSPECTION REQUIREMENTS PRIOR TO ROAD BASE AND/OR SURFACE IMPROVEMENT CONSTRUCTION.
7. IT IS THE CONTRACTOR'S RESPONSIBILITY TO BECOME FAMILIAR WITH THE PERMITS AND INSPECTION REQUIREMENTS SPECIFIED BY THE VARIOUS GOVERNMENTAL AGENCIES AND THE ENGINEER. THE CONTRACTOR SHALL OBTAIN ALL NECESSARY PERMITS PRIOR TO CONSTRUCTION, AND SCHEDULE INSPECTIONS AND TESTING ACCORDING TO AGENCY REQUIREMENTS.
8. ALL WORK PERFORMED SHALL COMPLY WITH THE CODES, STANDARDS, REGULATIONS AND REQUIREMENTS OF THE FLAGLER COUNTY LAND DEVELOPMENT CODE AND ENGINEERING STANDARDS, THE CURRENT EDITION OF THE FDOT STANDARD SPECIFICATIONS FOR ROAD, THE MOST RECENT EDITION OF FAA AC 150/5370-2 OPERATIONAL SAFETY ON AIRPORT DURING CONSTRUCTION, BRIDGE AND UTILITY CONSTRUCTION, AND THE REGULATIONS AND ORDINANCES OF THE VARIOUS OTHER GOVERNMENTAL AGENCIES HAVING JURISDICTION OVER THE WORK.
9. CONTRACTOR SHALL SUBMIT SHOP DRAWINGS ON ALL PRECAST AND MANUFACTURED ITEMS TO THE ENGINEER FOR APPROVAL. FAILURE TO OBTAIN APPROVAL BEFORE INSTALLATION COULD RESULT IN REMOVAL AND REPLACEMENT AT CONTRACTOR'S EXPENSE. THE ENGINEER'S REVIEW OF THE SHOP DRAWINGS IS FOR CONFORMITY WITH THE CONTRACT DOCUMENTS AND DOES NOT INCLUDE AN IN-DEPTH CHECK FOR THE ABILITY OF THE CONTRACTOR TO PERFORM THE WORK IN A SAFE OR EFFICIENT MANNER. THE ENGINEER'S REVIEW OF THE SHOP DRAWINGS DOES NOT RELIEVE THE CONTRACTOR OF RESPONSIBILITY FOR DIMENSIONAL ACCURACY TO ENSURE FIELD FIT AND CONFORMITY OF THE VARIOUS COMPONENTS AND DETAILS.
10. CONTRACTOR SHALL KEEP ENGINEER ADVISED OF CONSTRUCTION SCHEDULE CHANGES SO THAT ENGINEER CAN PROVIDE CONSTRUCTION CERTIFICATIONS TO JURISDICTIONAL AGENCIES.
11. WORK PERFORMED UNDER THIS CONTRACT SHALL INTERFACE SMOOTHLY WITH OTHER WORK BEING PERFORMED ON OR ADJACENT TO THE SITE BY OTHER CONTRACTORS AND UTILITY COMPANIES. IT WILL BE NECESSARY FOR THE CONTRACTOR TO COORDINATE AND SCHEDULE HIS ACTIVITIES, WHERE NECESSARY, WITH OTHER CONTRACTORS AND UTILITY COMPANIES.
12. SAFETY - DURING THE CONSTRUCTION AND/OR MAINTENANCE OF THIS PROJECT, ALL SAFETY REGULATIONS ARE TO BE ENFORCED. THE CONTRACTOR OR THEIR REPRESENTATIVE SHALL BE RESPONSIBLE FOR THE CONTROL AND SAFETY OF THE TRAVELING PUBLIC AND THE SAFETY OF HIS PERSONNEL. LABOR SAFETY REGULATIONS SHALL CONFORM TO THE PROVISIONS SET FORTH BY OSHA IN THE FEDERAL REGISTER OF THE DEPARTMENT OF TRANSPORTATION.
13. DURING THE COURSE OF THIS PROJECT, THE CONTRACTOR WILL BE EXPECTED TO CROSS ACTIVE AIRPORT PAVEMENT TO MAINTAIN SAFETY EQUIPMENT AND MEASURES AROUND THE SITE. IT IS THE CONTRACTOR'S RESPONSIBILITY TO UNDERGO THE PROPER RADIO TRAINING NECESSARY TO EFFECTIVELY COMMUNICATE WITH THE AIRPORT TOWER STAFF VIA RADIO WHEN CROSSING ACTIVE PAVEMENT.
14. CONTRACTOR SHALL PROVIDE ALL EQUIPMENT NECESSARY FOR DEWATERING. DISCHARGE WATER FROM DEWATERING SHALL BE CLEAR WITH NO VISIBLE SOIL PARTICLES. DISCHARGE WATER FROM DEWATERING SHALL BE DISPOSED OF IN SUCH A MANNER THAT IT WILL NOT INTERFERE WITH THE NORMAL DRAINAGE OF THE AREA IN WHICH THE WORK IS BEING PERFORMED, OR CREATE PONDING. THE OPERATION SHALL NOT CAUSE ANY DAMAGE TO ANY PORTION OF THE WORK COMPLETED, OR IN PROGRESS. THE DEWATERING OPERATION SHALL COMPLY WITH THE REQUIREMENTS OF APPLICABLE REGULATORY AGENCIES. A PRE-WORK MEETING WILL BE CONDUCTED WITH THE OWNER, THE CONTRACTOR, AND THE ENGINEER PRIOR TO BEGINNING ANY SITE EXCAVATION.
15. "AS-BUILT" PLANS FOR THE PROPOSED CONSTRUCTION SHALL BE PROVIDED UPON THE COMPLETION OF CONSTRUCTION. THE CONTRACTOR SHALL FURNISH THE OWNER'S ENGINEER WITH COMPLETE "AS-BUILT" INFORMATION CERTIFIED BY A FLORIDA REGISTERED PROFESSIONAL SURVEYOR, GP-90. AS-BUILT DRAWINGS SHALL BE COMPLETED ON EXISTING DRAWINGS AND ALL PROPOSED LOCATIONS AND ELEVATIONS SHALL BE UPDATED WITH AS-BUILT INFORMATION.
16. PIPE LENGTHS SHOWN ARE APPROXIMATE AND SHOULD BE ORDERED FROM FIELD STAKED QUANTITIES. PLAN PIPE LENGTHS ARE MEASURED AS DETAILED IN THE CORRESPONDING SPECIFICATIONS.
17. THESE DRAWINGS HAVE BEEN PREPARED, IN PART, BASED UPON RECORD DRAWINGS AND/OR CAD FILES FURNISHED BY OTHERS. WHILE THIS INFORMATION IS BELIEVED TO BE RELIABLE, THOSE UTILIZING THE INFORMATION ON THESE DRAWINGS ARE ADVISED TO OBTAIN INDEPENDENT VERIFICATION OF ITS ACCURACY BEFORE USING IT FOR ANY PURPOSE.
18. ALL AREAS DISTURBED AS A RESULT OF THE CONTRACTOR'S STAGING AND CONSTRUCTION OPERATIONS SHALL BE RESTORED EQUAL TO OR BETTER THAN ORIGINAL CONDITION AT THE CONTRACTOR'S EXPENSE.
19. ALL DIRT, DUST, STONES AND LOOSE DEBRIS SHALL BE CONTINUOUSLY REMOVED FROM ALL PAVED SURFACES DURING THIS CONTRACT.
20. ALL OF THE CONTRACTOR'S OPERATIONS SHALL REMAIN ON AIRPORT PROPERTY AT ALL TIMES. UNDER NO CIRCUMSTANCES WILL THE CONTRACTOR BE ALLOWED ON ADJACENT PROPERTY.
21. THE CONTRACT DOES NOT ALLOW FOR PRICE INCREASES DUE TO ESCALATION IN COST OF UNIT BID ITEMS. THE CONTRACTOR SHALL TAKE THIS INTO CONSIDERATION WHEN PREPARING UNIT PRICES FOR BID, SEE GP-20-05.
22. FLAGLER COUNTY RESERVES THE RIGHT TO ELIMINATE ANY ITEMS OF THE CONTRACT AND PERFORM THESE ITEMS WITH COUNTY SUPPLIED FORCES AND MATERIALS IN ACCORDANCE WITH SECTION 40 OF THE GENERAL PROVISIONS.
23. ALL ELEVATIONS REFER TO NAVD 88 VERTICAL DATUM. COORDINATES REFER NAD 83 HORIZONTAL DATUM.
24. THE TOPOGRAPHIC FEATURES SHOWN HEREON WERE COMPILED FROM A FIELD SURVEY PERFORMED BY BOWMAN 01-20-2026.
25. THE CONTRACTOR SHALL BE RESPONSIBLE FOR THE PAYMENT OF ALL FAILED QA TESTING REGARDLESS OF THE REASON FOR FAILURE. THE CONTRACTOR SHALL ENSURE AREAS ARE PASSING OR ABLE TO PASS PRIOR TO REQUESTING QA TESTING.
26. WHEN CUTTING CORES DURING ASPHALT QC TESTING, THE CONTRACTOR SHALL MAKE ANY AND ALL NECESSARY EFFORTS TO REMOVE SAWCUT SLURRY DURING CORE DRILLING. IF SLURRY REMAINS AFTER CUTTING OPERATIONS, THE CONTRACTOR SHALL RINSE/WASH THE ASPHALT SURFACE. NO ADDITIONAL COMPENSATION SHALL BE MADE FOR SLURRY REMOVAL OR CLEANUP. IT SHALL BE CONSIDERED A NECESSARY AND INCIDENTAL PORTION OF THE QC TESTING PROCEDURE.
27. THE CONTRACTOR SHALL HAVE A REPRESENTATIVE ON CALL AT ALL TIMES FOR EMERGENCY MAINTENANCE OF ON AIRPORT HAZARD LIGHTING, RUNWAY CLOSURE MARKERS, AND BARRICADES.
28. PRIOR TO THE START OF CONSTRUCTION, CONTRACTOR SHALL ACTIVATE ANY ELECTRICAL FIXTURES WITHIN THE INTENDED OVERALL PROJECT WORK AREA AND TAKE NOTE OF ITS EXISTING CONDITIONS. AFTER CONCLUDING THE OVERALL PROJECT, CONTRACTOR SHALL REACTIVATE ANY ELECTRICAL FIXTURES WITHIN THE INTENDED OVERALL PROJECT WORK AREA AND TAKE NOTE OF ITS FINAL CONDITIONS.

A1 GENERAL NOTES

ABAN. - ABANDONED
APP. - APPROXIMATE
ASP - ASPHALT
BL - BASELINE
BLDG - BUILDING
BM - BENCHMARK
CL - CENTERLINE
CCR - CONSTANT CURRENT REGULATOR
CIP - CAST IRON PIPE
CMP - CORRUGATED METAL PIPE
CONC. - CONCRETE
CSP - CORRUGATED STEEL PIPE
D - DIAMETER
E - EASTING
ELL - ELBOW / ARM
ELEV. - ELEVATION
FND. - FOUNDATION
HP - HIGH POINT
INV. - INVERT
JCP - JUNCTION CAN PLAZA
LT- LEFT
LP - LOW POINT
MAX. - MAXIMUM
MES - MITERED END SECTION
M.E.G - MEET EXISTING GRADE
MIN. - MINIMUM
N - NORTHING
NA - NOT ACCEPTABLE
NFPA - NATIONAL FIRE PROTECTION ASSOCIATION
OFA - OBJECT FREE AREA
O.C - ON CENTER
PVMT - PAVEMENT
PC - POINT OF CURVATURE
PCC - PORTLAND CEMENT CONCRETE PAVEMENT
PI - POINT OF INTERSECTION
PL - PROPERTY LINE
PVI - POINT OF VERTICAL INTERSECTION
PVC - POLYVINYL CHLORIDE PIPE
PET - CROSSLINKED POLYETHYLENE PRESSURE TUBING
PVT - POINT OF TANGENCY (VERTICAL CURVE)
R - RADIUS
RCP - REINFORCED CONCRETE PIPE
RGS - RIGID GALVANIZED STEEL
ROFA - RUNWAY OBJECT FREE AREA
RSA - RUNWAY SAFETY AREA
ROW - RIGHT OF WAY
RPZ - RUNWAY PROTECTION ZONE
RT - RIGHT
RWY - RUNWAY
SHDR - SHOULDER
SICPP - SMOOTH INTERIOR CORRUGATED POLYETHYLENE PIPE
ABAN. - STATION
TLOFA - TAXILANE OBJECT FREE AREA
TOFA - TAXIWAY OBJECT FREE AREA
TSA - TAXIWAY SAFETY AREA
TWY - TAXIWAY
TYP. - TYPICAL
UG - UNDERGROUND

C4 ABBREVIATIONS

SHEET INDEX

SHEET NO.	SHEET REFERENCE	TITLE
1	GI001	COVER SHEET
2	GI002	GENERAL NOTES, ABBREVIATIONS & SHEET INDEX
3	GC101	GENERAL PLAN & CONSTRUCTION SAFETY AND PHASING PLAN
4	GC102	CIVIL/SITE IMPROVEMENTS PLAN
5	GC501	CONSTRUCTION SAFETY AND PHASING NOTES & DETAILS

B4 SHEET INDEX

FLAGLER EXECUTIVE AIRPORT — Where Service Soars — FIN

AVCON, INC.
ENGINEERS & PLANNERS
5555 E. MICHIGAN ST., SUITE 200 - ORLANDO, FL 32822-2779
OFFICE: (407) 599-1122 - FAX: (407) 599-1133
CORPORATE CERTIFICATE OF AUTHORIZATION NUMBER: 5057
www.avconinc.com

This item has been digitally signed and sealed by Daniel J. Nickols, Jr., P.E., on the date adjacent to the seal. Signature must be verified on any electronic copies.

DANIEL JOSEPH NICKOLS, JR. LICENSE No 78634 STATE OF FLORIDA PROFESSIONAL ENGINEER
Daniel Nickols Jr.

"THIS SHEET SHALL BE PRINTED IN COLOR. SHEETS NOT PRINTED IN COLOR ARE INVALID"

AIR TRAFFIC CONTROL TOWER REHABILITATION

FLAGLER EXECUTIVE AIRPORT (FIN) FLAGLER COUNTY, FLORIDA

GENERAL NOTES, ABBREVIATIONS & SHEET INDEX

ATTENTION:
THIS DOCUMENT CONTAINS PRIVILEGED AND PROPRIETARY INFORMATION, ALL OF WHICH IS EXPRESSLY PROVIDED BY AVCON, INC., FOR USE BY THE INTENDED RECIPIENT, AND FOR A SPECIFIC PURPOSE. WITHOUT THE EXPRESS WRITTEN CONSENT OF AVCON, INC. ANY DISTRIBUTION, REPRODUCTION, OR OTHER USE OF THIS DOCUMENT, IN WHOLE OR IN PART, IS STRICTLY PROHIBITED

SCALE (US SVY FT): GRAPHIC

REVISIONS:

NO.	DATE	BY	DESCRIPTION

DESIGNED BY: DJN
DRAWN BY: AMC
CHECKED BY: DJN
APPROVED BY: DJN
DATE: JULY 2026

FDOT FM NO. XXXXXX-1
FAA AIP NO. 3-12-00XX-XXX-XXXX
FLAGLER COUNTY ITB NO. 26-ITB-018
AVCON PROJECT NO. 2026.355.03
CADD: 2026.355.03_GI SERIES

BID DOCUMENTS

DRAWING GI002

AIR TRAFFIC CONTROL TOWER REHABILITATION WORK AREA

CONTRACTOR STAGING, STORAGE, STOCKPILE, AND MATERIAL LAYDOWN AREA

CONTRACTOR ACCESS ROUTE

1. **CONSTRUCTION SAFETY AND PHASING NOTES**
2. WORK AREA
   2.1. WORK IN WORK AREA SHALL BE LIMITED TO **120 CALENDAR DAYS** TO REACH SUBSTANTIAL COMPLETION. AN ADDITIONAL **30 CALENDAR DAYS** SHALL BE PERMITTED FOR ACHIEVING FINAL COMPLETION.
3. THE CONTRACTOR SHALL HAVE A QUALIFIED REPRESENTATIVE IN RESPONSIBLE CHARGE OF THE PROJECT ON SITE AT ALL TIMES.
4. ANY CONTRACTOR VEHICLES PRESENT ON THE CONSTRUCTION SITE SHALL BE EQUIPPED WITH BEACONS OR FLASHING AMBER CONSTRUCTION LIGHTS, AND IDENTIFICATION MARKINGS IN ACCORDANCE WITH THE CONTRACT AND CONSTRUCTION SAFETY AND PHASING PLAN DOCUMENT.
5. THE CONTRACTOR SHALL MAINTAIN A SAFE AND SECURE JOB SITE AT ALL TIMES. THE CONTRACTOR SHALL HAVE A REPRESENTATIVE MAINTAINING GATE ACCESS.
6. CONTRACTOR SHALL TAKE NOTE OF THE EXISTING CONDITIONS OF ANY AIRPORT OWNED ACCESS GATE AND FENCING THAT IS USED FOR CONSTRUCTION ACCESS. IF DAMAGED, EXISTING AIRPORT FENCING OR ACCESS GATE SHALL BE REPLACED OR RESTORED TO ITS ORIGINAL CONDITION.

C1 SHEET LEGEND & PHASING NOTES

1. CONTRACTOR SHALL KEEP ALL PAVEMENT SURFACES (AIRSIDE AND LANDSIDE) CLEAN AND FREE OF DEBRIS.
2. CONTRACTOR SHALL NOT OBSTRUCT ATCT PERSONNEL ACCESS, PARKING, OR ENTRY/EXIT TO THE ATCT FACILITY THROUGHOUT THE DURATION OF CONSTRUCTION.
3. ANY DAMAGE TO EXISTING STRUCTURES OR PAVEMENTS SHALL BE REPAIRED AT THE EXPENSE OF THE CONTRACTOR.
4. CONTRACTOR TO INSTALL TEMPORARY STABILIZED ACCESS ROADS AS NEEDED TO ACCESS THE WORK AREAS.
5. USE OF CRANES, LIFTS, OR BOOMS SHALL BE COORDINATED PRIOR TO USE ON SITE. ATCT LINE OF SITE SHALL NOT BE OBSTRUCTED AT ANY POINT.
6. ATCT HOURS OF OPERATION ARE 0700-1900 LOCAL. ANY WORK THAT PREVENTS CONTINUOUS OPERATION OF THE ATCT SHALL BE COMPLETED OUTSIDE OF NORMAL ATCT HOURS OF OPERATION.
7. WORK COMPLETED DURING THE TOWERS HOURS OF OPERATIONS SHALL BE NON-DISRUPTIVE. IF CONSTRUCTION NOISE LEVELS DISRUPT OR PREVENT ATCT PERSONNEL FROM PERFORMING THEIR DUTIES, CONSTRUCTION ACTIVITIES SHALL BE SUSPENDED AND RESCHEDULED FOR COMPLETION OUTSIDE OF NORMAL TOWER WORKING HOURS.
8. CLOSE COORDINATION WITH ATCT STAFF AND MANAGEMENT SHALL BE REQUIRED FOR THIS PROJECT. REQUESTS FOR TEMPORARY CLOSURE OF THE ATCT MAY BE REQUESTED, BUT SHALL REQUIRE APPROVAL FROM THE OWNER, ENGINEER, AND ATCT STAFF.
9. MATERIAL STOCKPILES AND STORAGE SHALL NOT IMPEDE ACCESS TO THE TOWER OR OBSTRUCT TOWER LINE OF SITE AT ANY TIME. FAILURE TO ADHERE TO THESE REQUIREMENTS MAY RESULT IN TEMPORARY WORK STOPPAGE UNTIL THE ISSUES ARE ADDRESSED TO THE SATISFACTION OF THE OWNER, ENGINEER, AND ATCT STAFF.
10. PARTIAL OR FULL CLOSURES OF DOUG THOMAS WAY OR ADJACENT STREETS ARE NOT PERMITTED FOR THIS PROJECT.

B1 SHEET NOTES

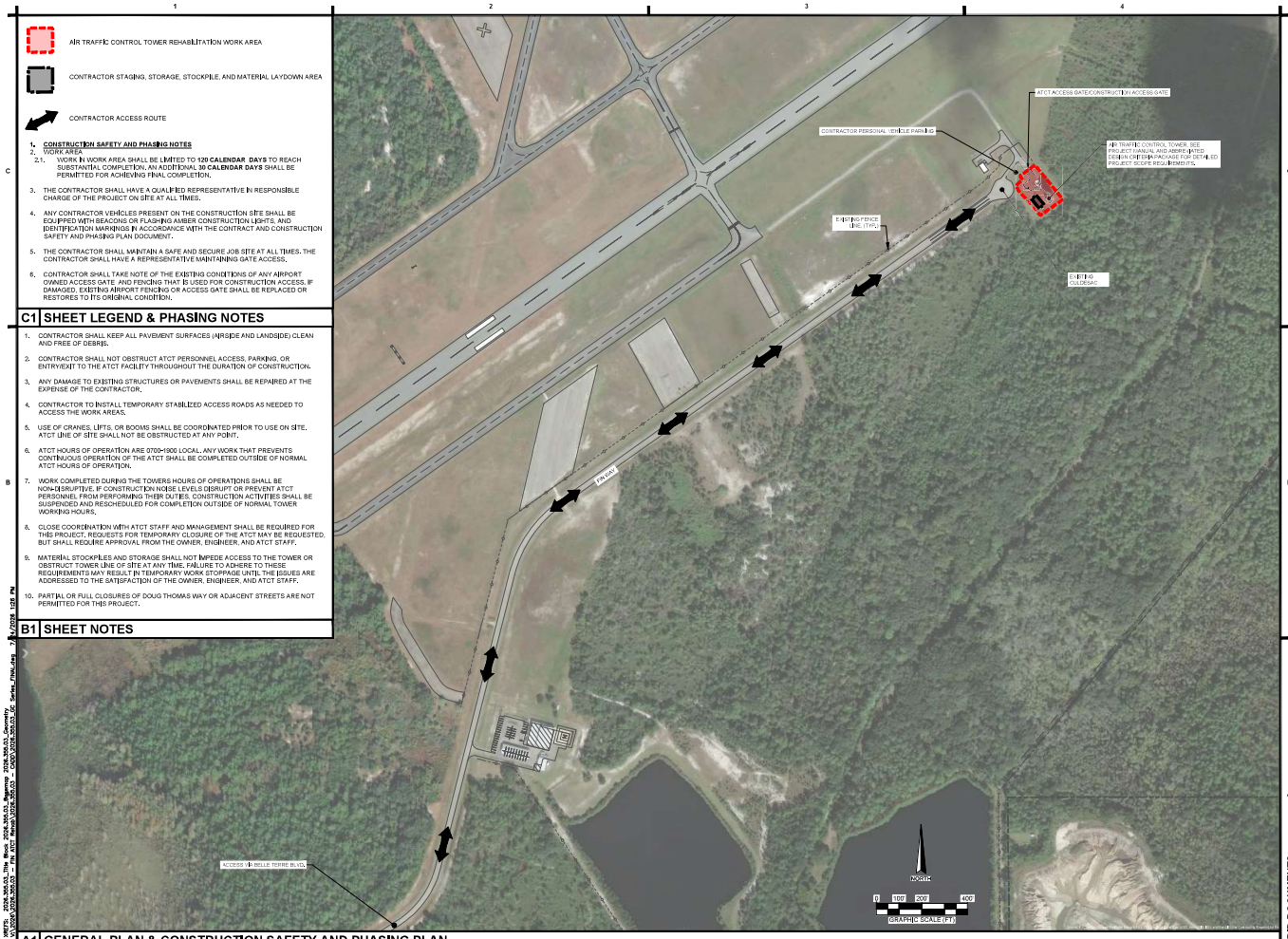

A1 GENERAL PLAN & CONSTRUCTION SAFETY AND PHASING PLAN

FLAGLER EXECUTIVE AIRPORT (FIN)

AVCON, INC.
ENGINEERS & PLANNERS
OFFICE: (407) 896-4123 • FAX: (407) 896-7133
CORPORATE CERTIFICATE OF AUTHORIZATION NUMBER: 5957
www.avconinc.com

This item has been digitally signed and sealed by Daniel J. Nickols, Jr., P.E., on the date adjacent to the seal. Signature must be verified on any electronic copies.

JOSEPH NICKOLS, JR. LICENSED No 78634 STATE OF FLORIDA PROFESSIONAL ENGINEER

Daniel Nickols, Jr., P.E.

AIR TRAFFIC CONTROL TOWER REHABILITATION

FLAGLER EXECUTIVE AIRPORT (FIN) FLAGLER COUNTY, FLORIDA

GENERAL PLAN & CONSTRUCTION SAFETY AND PHASING PLAN

THIS SHEET SHALL BE PRINTED IN COLOR. SHEETS NOT PRINTED IN COLOR ARE INVALID

BID DOCUMENTS

ATTENTION:
THIS DOCUMENT CONTAINS PRIVILEGED AND PROPRIETARY INFORMATION. ALL OF WHICH IS EXPRESSLY PROVIDED BY AVCON, INC. FOR USE BY THE INTENDED RECIPIENT, AND FOR A SPECIFIC PURPOSE, WITHOUT THE EXPRESS WRITTEN CONSENT OF AVCON, INC. ANY DISTRIBUTION, REPRODUCTION, OR OTHER USE OF THIS DOCUMENT, IN WHOLE OR IN PART, IS STRICTLY PROHIBITED.

SCALE (US SVY FT): GRAPHIC

REVISIONS:

NO.	DATE	BY	DESCRIPTION

DESIGNED BY:	DJN
DRAWN BY:	AMC
CHECKED BY:	DJN
APPROVED BY:	DJN
DATE:	JULY 2026
FDOT FM NO.	XXXXXX-1
FAA AIP NO.	3-12-00XX-XXX-XXXX
FLAGLER COUNTY ITB NO.	26-ITB-018
AVCON PROJECT NO.	2026.355.03
CADD:	2026.355.03_GC SERIES_FINAL

DRAWING
GC101

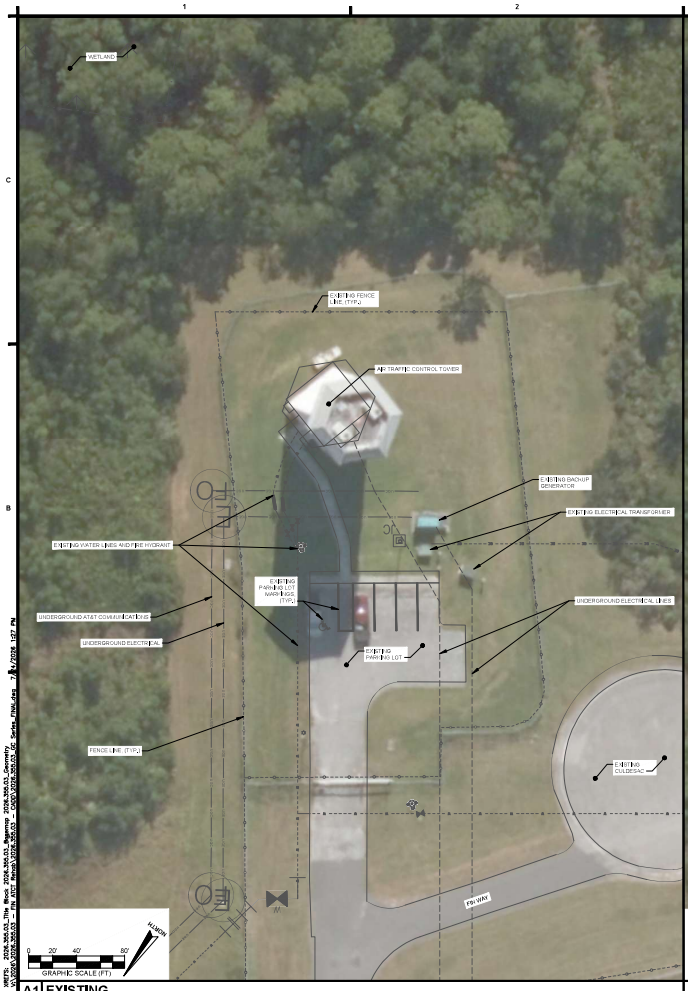

A1 EXISTING

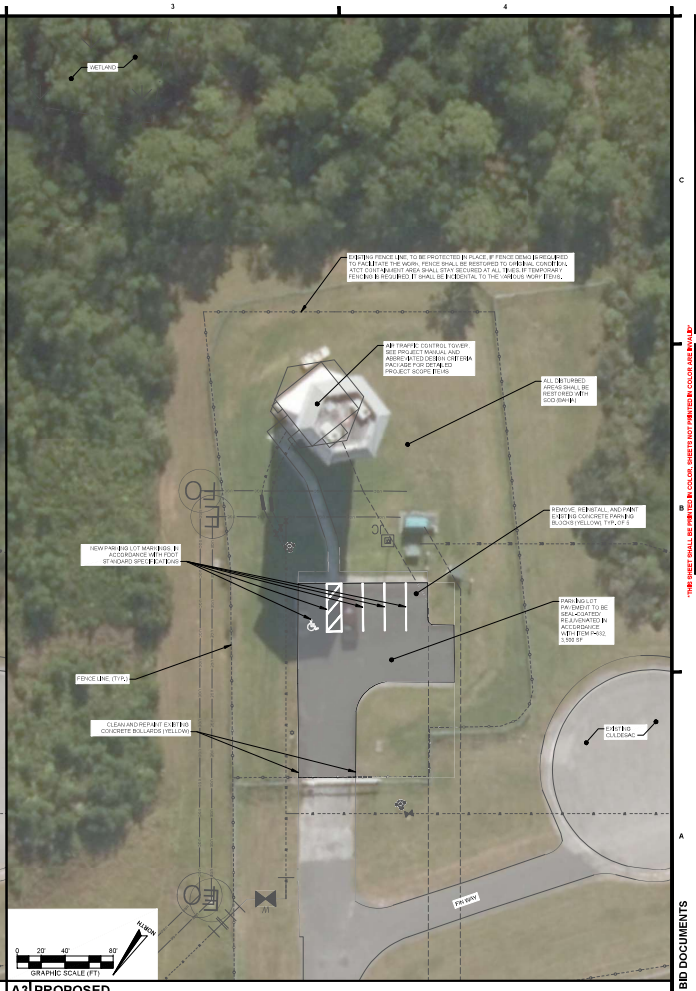

A3 PROPOSED

FLAGLER EXECUTIVE AIRPORT

AVCON

AVCON, INC.
ENGINEERS & PLANNERS
OFFICE: (407) 896-1733 • FAX: (407) 896-1733
CORPORATE CERTIFICATE OF AUTHORIZATION NUMBER: 6957
www.avconinc.com

This item has been digitally signed and sealed by Daniel J. Nichols, Jr., P.E., on the date adjacent to the seal. Signature must be verified on any electronic copies.

JOSEPH NICHOLAS DANIEL JR. LICENSED No 78634 STATE OF FLORIDA PROFESSIONAL ENGINEER

Daniel Nichols, Jr., P.E.

AIR TRAFFIC CONTROL TOWER REHABILITATION

FLAGLER EXECUTIVE AIRPORT (FIN) FLAGLER COUNTY, FLORIDA

CIVIL/SITE IMPROVEMENTS PLAN

THIS SHEET SHALL BE PRINTED IN COLOR. SHEETS NOT PRINTED IN COLOR ARE INVALID

ATTENTION:
THIS DOCUMENT CONTAINS PRIVILEGED AND PROPRIETARY INFORMATION. ALL OF WHICH IS EXPRESSLY PROVIDED BY AVCON, INC. FOR USE BY THE INTENDED RECIPIENT, AND FOR A SPECIFIC PURPOSE, WITHOUT THE EXPRESS WRITTEN CONSENT OF AVCON, INC. ANY DISTRIBUTION, REPRODUCTION, OR OTHER USE OF THIS DOCUMENT, IN WHOLE OR IN PART, IS STRICTLY PROHIBITED.

SCALE (US SVY FT): GRAPHIC

REVISIONS:

NO.	DATE	BY	DESCRIPTION

DESIGNED BY:	DJN
DRAWN BY:	AMC
CHECKED BY:	DJN
APPROVED BY:	DJN
DATE:	JULY 2026

FDOT FM NO.	XXXXXX-1
FAA AIP NO.	3-12-00XX-XXX-XXXX
FLAGLER COUNTY ITB NO.	26-ITB-018
AVCON PROJECT NO.	2026.355.03
CADD:	2026.355.03_GC SERIES_FINAL

BID DOCUMENTS

DRAWING
GC102

C1 SHEET NOTES

SHEET NOTES:

1. IF REQUESTED, AUTOCAD FILES MAY BE PROVIDED TO THE CONTRACTOR FOR ASSISTANCE WITH LAYOUT AND PROJECT STAKING, HOWEVER, THE AUTOCAD FILES SHALL BE USED FOR REFERENCE ONLY.
2. CONTRACTOR SHALL VERIFY EXISTING BENCHMARK INFORMATION PRIOR TO LAYOUT AND STAKING IN ACCORDANCE WITH THE PLANS. CONTRACTOR SHALL PROVIDE THE ENGINEER WITH WRITTEN DOCUMENTATION THAT SURVEY CONTROL WAS ESTABLISHED IN ACCORDANCE WITH THE PLANS AND DETAILS PRIOR TO LAYOUT AND STAKING OF PROPOSED WORK.

MARKING NOTES:

3. PRIOR TO APPLICATION OF PAINT MARKINGS, THE CONTRACTOR LAYOUT SHALL BE REVIEWED AND APPROVED BY THE ENGINEER.
4. ANY MARKINGS OBSCURED BY CONSTRUCTION OPERATIONS OUTSIDE OF THE SCOPE OF WORK SHALL BE RESTORED BY THE CONTRACTOR. IF ANY EXISTING MARKINGS ARE DISTURBED OUTSIDE OF THE SCOPE OF WORK THE CONTRACTOR SHALL BE RESPONSIBLE FOR ANY ADDITIONAL MARKING COST.
5. PRIOR TO THE APPLICATION OF PAINT THE CONTRACTOR SHALL SWEEP THE PAVEMENT AND REMOVE ANY ASPHALT SCABS BEFORE PROCEEDING WITH THE MARKING LAYOUT.

C2 ACCESSIBILITY PARKING STALL MARKING

NOTES:

1. ALL FDOT PAVEMENT MARKINGS ARE REFERENCED FROM THE FDOT FY 2025-26 STANDARD PLANS AND SHALL BE IN ACCORDANCE WITH THE MUTCD 2023 EDITION.
2. GLASS BEADS SHALL BE TYPE I AND SHALL BE APPLIED IMMEDIATELY AFTER THE APPLICATION OF PAINT.

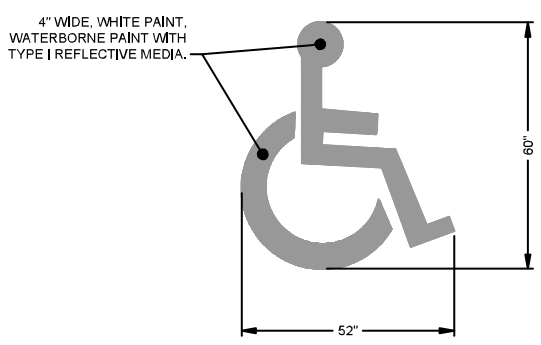

C3 TYPICAL PARKING STALL LAYOUT DETAIL

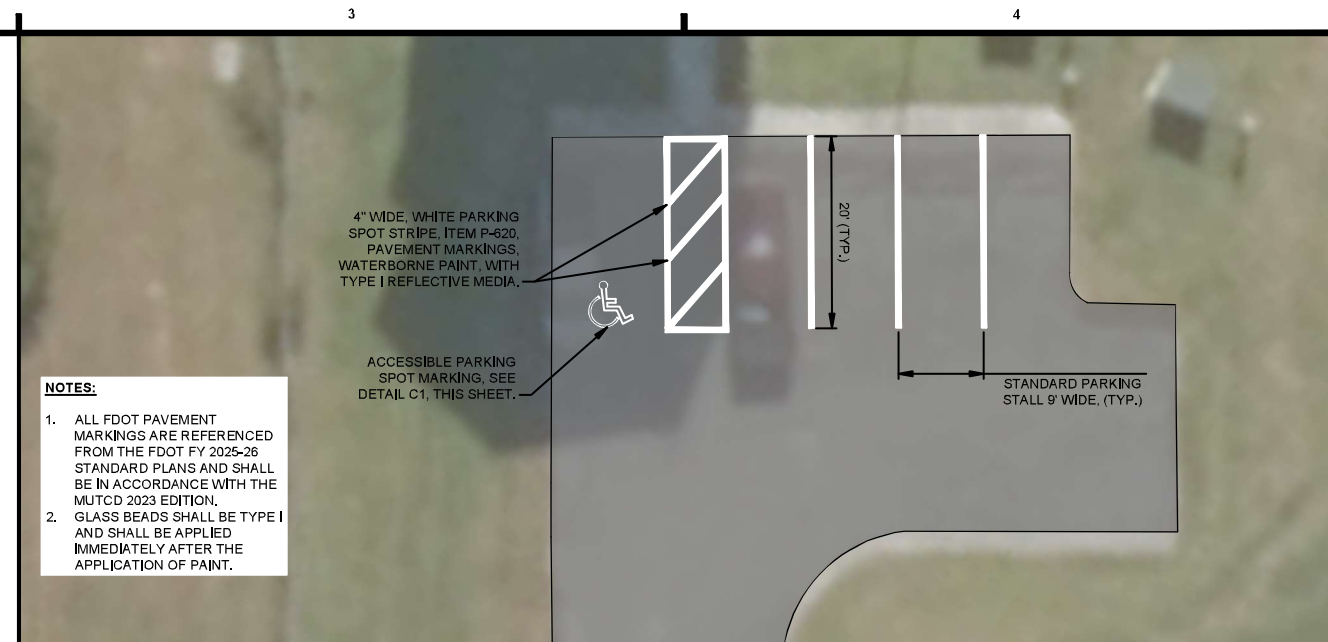

A1 CONSTRUCTION SAFETY AND PHASING NOTES

GENERAL NOTES

1. ALL VEHICLES IN THE CONSTRUCTION AREA MUST BE EQUIPPED WITH AN ORANGE AND WHITE CHECKERED FLAG ON THE HIGHEST POINT OR A FLASHING/ROTATING AMBER CONSTRUCTION BEACON.
2. ACCESS TO THIS PROJECT REQUIRES USE OF EXISTING CITY AND AIRPORT ROADS. IT SHALL BE THE RESPONSIBILITY OF THE CONTRACTOR TO ENSURE THAT ALL ACCESS SURFACES REMAIN CLEAN AND CLEAR OF DIRT AND DEBRIS AT ALL TIMES.
3. ADDITIONALLY, THE CONTRACTOR SHALL BE RESPONSIBLE FOR REPAIRING ANY AND ALL DAMAGE INFLICTED UPON THE ACCESS ROUTES OVER THE DURATION OF THE PROJECT. THE ENGINEER/OWNER SHALL DOCUMENT THE EXISTING CONDITION AND POST-CONDITION OF ALL ACCESS ROUTES. ANY MEASURABLE DAMAGE SHALL BE REPAIRED BY THE CONTRACTOR AT NO ADDITIONAL COST TO THE OWNER.
4. THE CONTRACTOR SHALL CONDUCT ALL WORK IN ACCORDANCE WITH FAA ADVISORY CIRCULAR AC 150/5370-2, LATEST EDITION.
5. THE CONTRACTOR SHALL CONTACT THE ENGINEER FOR CONTACT INFORMATION OF KEY AIRPORT PERSONNEL.
6. THE BARRICADES INDICATED ON THE PLAN REPRESENT THE TRAFFIC CONTROL REQUIRED DURING CONSTRUCTION. IN THE EVENT THAT MORE TRAFFIC CONTROL IS REQUIRED DURING CONSTRUCTION, IT IS THE CONTRACTOR'S RESPONSIBILITY TO DETERMINE THE NUMBER AND LOCATION OF BARRICADES REQUIRED TO KEEP THE ACTIVE WORK AREA PROTECTED.
7. THE CONTRACTOR IS REQUIRED TO SUBMIT A SAFETY PLAN COMPLIANCE CERTIFICATION (SPCC). THIS DOCUMENT CERTIFIES THAT THE CONTRACTOR HAS READ AND UNDERSTANDS THE SAFETY AND PHASING REQUIREMENTS OF THE PROJECT. ADDITIONALLY THE CONTRACTOR AGREES TO FOLLOW THE RULES AND REQUIREMENTS OF THIS SAFETY AND PHASING PLAN, THE CONTRACT DOCUMENTS AND THE REQUIREMENTS OF FAA ADVISORY CIRCULAR 150/5370-2, LATEST EDITION. A NOTICE TO PROCEED (NTP) WILL NOT BE ISSUED UNTIL THE SPCC IS SUBMITTED.
8. NO BADGING IS REQUIRED FOR THIS PROJECT/AIRPORT, HOWEVER THE CONTRACTOR SHALL BE REQUIRED TO COORDINATE WITH THE OWNER FOR ACCESS THROUGH THE AUTOMATED GATES.
9. THE CONTRACTOR SHALL HAVE A REPRESENTATIVE ON SITE AT ALL TIMES WHILE WORK IS BEING COMPLETED.
10. ATCT ACCESS GATE SHALL REMAIN CLOSED AND SECURED AT ALL TIMES, UNLESS A GATE GUARD IS PROVIDED TO ENSURE ONLY AUTHORIZED ACCESS IS GRANTED THROUGH THE GATE.
11. ANY CONTRACTOR VEHICLES PRESENT ON THE CONSTRUCTION SITE WILL BE REQUIRED TO HAVE THEIR VEHICLES EQUIPPED WITH THE APPROPRIATE VEHICLE LIGHTING, AND VEHICLE IDENTIFYING MARKING IN ACCORDANCE WITH THE CONTRACT AND CONSTRUCTION SAFETY AND PHASING PLAN DOCUMENT.
12. IT SHALL BE THE RESPONSIBILITY OF THE CONTRACTOR TO MAINTAIN A SAFE AND SECURE JOB SITE. THE CONTRACTOR SHALL BE RESPONSIBLE FOR MAINTAINING SITE ACCESS AND PROPER SECURITY OF CONSTRUCTION ACCESS GATES.

INSPECTION REQUIREMENTS

1. AT THE END OF EACH DAY, THE CONSTRUCTION AREA SHALL BE INSPECTED FOR ANY FOREIGN OBJECT DEBRIS (FOD) ON AIRFIELD OR NON AIRFIELD PAVEMENTS AND FOR ANY EXCESS CONSTRUCTION MATERIALS.
2. AFTER ALL WORK HAS BEEN COMPLETED FOR THE DAY AND PRIOR TO DEPARTING THE PROJECT AREA, THE CONTRACTOR OR THEIR SUPERINTENDENT SHALL SEE THAT:

2.1. ALL TOOLS, EQUIPMENT AND CONSTRUCTION MATERIALS HAVE BEEN REMOVED AND PROPERLY STORED AT THE STAGING AREA.

2.2. OPEN TRENCHES, EXCAVATIONS AND STOCKPILED MATERIAL AT THE CONSTRUCTION SITE SHALL BE PROMINENTLY MARKED WITH LIGHTS DURING HOURS OF DARKNESS.

SAFETY REQUIREMENTS

1. THE CONTRACTOR OR THEIR PROJECT REPRESENTATIVE SHALL NOTIFY THE AIRPORT REPRESENTATIVE PRIOR TO STARTING WORK EACH DAY AND WHEN WORK HAS BEEN COMPLETED FOR THE DAY. IT SHALL ALSO BE THE CONTRACTOR OR THEIR REPRESENTATIVE'S RESPONSIBILITY TO MAKE A THOROUGH CHECK OF THE WORK AREAS, TO SEE THAT ALL EQUIPMENT HAS BEEN RETURNED AND PARKED IN THE PARKING AREAS DESIGNATED BY THE ENGINEER.
3. EQUIPMENT NOT IN OPERATION SHALL BE KEPT IN THE STAGING AREA; PERSONNEL SHALL NOT ENTER OR OPERATE EQUIPMENT WITHIN ACTIVE OPERATIONAL AREAS OF THE AIRPORT WITHOUT SPECIFIC PERMISSION FROM THE OFFICE OF THE AIRPORT REPRESENTATIVE.
4. ALL CONSTRUCTION EQUIPMENT AND VEHICLES WILL BE REQUIRED TO HAVE A FLAG ON STAFF OR A YELLOW/AMBER LENS ROTATING/FLASHING LIGHT MOUNTED ON THE ROOF OR SO ATTACHED TO THE VEHICLE THAT THE FLAG OR LIGHT WILL BE READILY VISIBLE. THE FLAG SHOULD BE NO LESS THAN 3 FEET SQUARE CONSISTING OF A CHECKERED PATTERN OF INTERNATIONAL ORANGE AND WHITE SQUARES OF NOT LESS THAN ONE FOOT ON EACH SIDE. THE CONTRACTOR SHALL HAVE A SUFFICIENT NUMBER OF FLAGS AND STAFFS TO PROVIDE FOR ALL VEHICLE AND EQUIPMENT NEEDS.
5. UNAUTHORIZED ENTRANCE OF CONTRACTOR EMPLOYEES AND EQUIPMENT INTO AN AIR OPERATIONS AREA WILL BE CAUSE FOR IMMEDIATE ACTION AS PROVIDED FOR IN GENERAL PROVISIONS SUBSECTION TITLED CHARACTER OF WORKERS METHODS AND EQUIPMENT OF SECTION 80.

C3 LOW PROFILE BARRICADE DETAIL

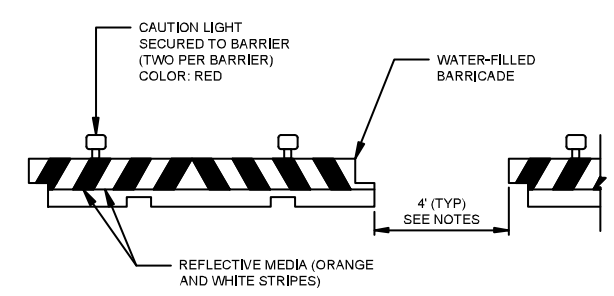

NOTES:

1. LOW PROFILE BARRICADES SHALL BE SUFFICIENTLY WEIGHTED TO PRECLUDE MOVEMENT FROM PROP BLAST.
2. FLAT, DIRECTIONAL WARNING LIGHTS SHALL NOT BE ACCEPTABLE.
3. EXACT LOCATIONS SHALL BE DETERMINED DURING CONSTRUCTION BY THE ENGINEER.
4. BARRICADES SHALL BE WATER-FILLED OR WEIGHED IN A WAY TO PREVENT MOVEMENT DUE TO WIND, JET BLAST, OR PROP WASH.
5. PLACEMENT, MAINTENANCE, AND REMOVAL OF BARRICADES SHALL NOT BE PAID SEPARATELY AND SHALL BE INCIDENTAL TO ITEM GP-80, CONSTRUCTION SAFETY AND PHASING PLAN COMPLIANCE.
6. PRIOR TO THE RE-OPENING OF AIRFIELD PAVEMENTS, THE PAVEMENT UNDERNEATH THE BARRICADES SHALL BE SWEPT AND FREE OF DEBRIS.

A3 TEMPORARY CONSTRUCTION ACCESS GATE (IF NECESSARY)

NOTES:

1. THE CONTRACTOR SHALL FURNISH THEIR OWN LOCKING MECHANISM FOR THE GATE FOR THE DURATION OF THE PROJECT.
2. AT THE COMPLETION OF THE PROJECT, THE CONTRACTOR SHALL REMOVE THEIR LOCKS AND NOTIFY THE AIRPORT.
3. THE GATE MATERIAL SHALL MATCH EXISTING FENCE FABRIC AND MATERIAL (GALVANIZED STEEL), IN ACCORDANCE WITH ITEM F-162.
4. GATE LOCATION SHALL BE COORDINATED BY THE CONTRACTOR, AND APPROVED BY THE ENGINEER, TO COINCIDE WITH THE CONTRACTOR INSTALLED STABILIZED CONSTRUCTION ENTRANCE.
5. COST OF INSTALLING CONSTRUCTION ACCESS GATES SHALL BE PAID UNDER F-152 CONSTRUCTION ACCESS GATE.

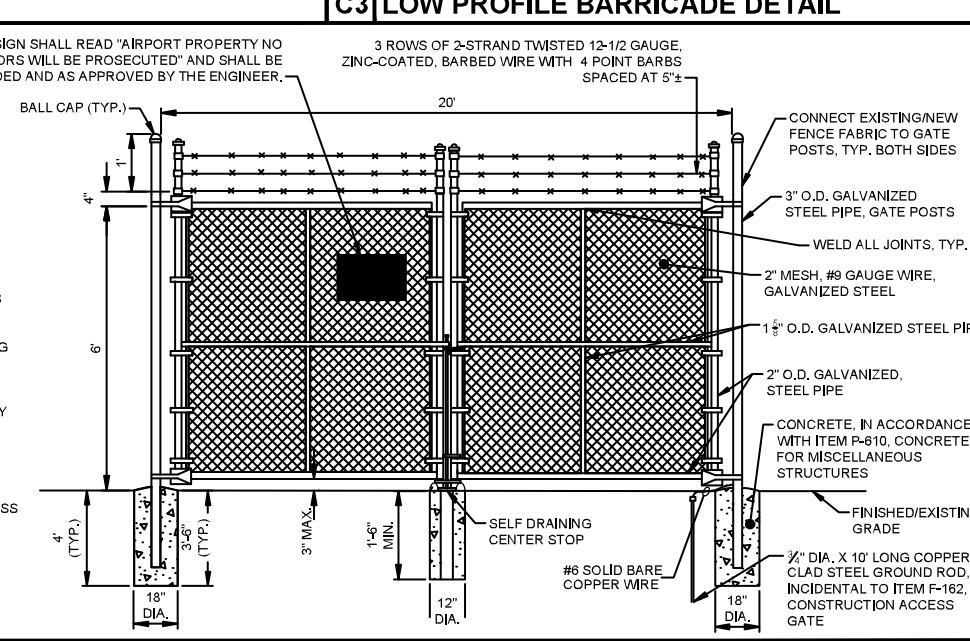

AIR TRAFFIC CONTROL TOWER REHABILITATION

FLAGLER EXECUTIVE AIRPORT (FIN) FLAGLER COUNTY, FLORIDA

CONSTRUCTION SAFETY AND PHASING NOTES & DETAILS

FLAGLER EXECUTIVE AIRPORT — Where Service Soars

AVCON

AVCON, INC.
ENGINEERS & PLANNERS
5555 E. MICHIGAN ST., SUITE 200 - ORLANDO, FL 32822-2779
OFFICE: (407) 599-1122 - FAX: (407) 599-1133
CORPORATE CERTIFICATE OF AUTHORIZATION NUMBER: 5057
www.avconinc.com

This item has been digitally signed and sealed by Daniel J. Nickols, Jr., P.E., on the date adjacent to the seal. Signature must be verified on any electronic copies.

DANIEL JOSEPH NICKOLS, JR. LICENSE No 78634 STATE OF FLORIDA PROFESSIONAL ENGINEER

Daniel Nickols Jr.

"THIS SHEET SHALL BE PRINTED IN COLOR, SHEETS NOT PRINTED IN COLOR ARE INVALID"

ATTENTION:
THIS DOCUMENT CONTAINS PRIVILEGED AND PROPRIETARY INFORMATION, ALL OF WHICH IS EXPRESSLY PROVIDED BY AVCON, INC., FOR USE BY THE INTENDED RECIPIENT, AND FOR A SPECIFIC PURPOSE. WITHOUT THE EXPRESS WRITTEN CONSENT OF AVCON, INC. ANY DISTRIBUTION, REPRODUCTION, OR OTHER USE OF THIS DOCUMENT, IN WHOLE OR IN PART, IS STRICTLY PROHIBITED

SCALE (US SVY FT): GRAPHIC

REVISIONS:

NO.	DATE	BY	DESCRIPTION

DESIGNED BY:	DJN
DRAWN BY:	GT
CHECKED BY:	DJN
APPROVED BY:	DJN
DATE:	JULY 2026
FDOT FM NO.	XXXXXX-1
FAA AIP NO.	3-12-00XX-XXX-XXXX
FLAGLER COUNTY ITB NO.	26-ITB-018
AVCON PROJECT NO.	2026.355.03
CADD:	2026.355.03_GC SERIES_FINAL

BID DOCUMENTS

DRAWING **GC501**

XREFS: 2026.355.03_Title Block 2026.355.03_Basemap 2026.355.03_Geometry
V:\2026\2026.355.03 - FIN ATCT Rehab\2026.355.03 - CADD\2026.355.03_GC Series_FINAL.dwg 7/24/2026 1:27 PM

Office of Procurement and Contracts
1769 E. Moody Blvd, Bldg 2
Bunnell, FL 32110

FLAGLER COUNTY FLORIDA

www.flaglercounty.gov
Phone: (386) 313-4008
Fax: (386) 313-4108

Addendum No.: 1
Solicitation No.: 26-ITB-018
Solicitation: Air Traffic Control Tower Rehabilitation
Addendum Date: August 3, 2026
Procurement Contact: Shannon Burnett

This addendum is issued to provide all prospective bidders/offerors with information on questions, clarifications, and revisions made to the solicitation. **This addendum is hereby incorporated in and made a part of 26-ITB-018.**

Overview

Attachments:

Added:

Attachment H- Pre-Bid Meeting Minutes

Attachment I- Pre-Bid Sign In Sheet

Attachment J- Original 2008 ATCT Design Plans _ FOR REFERENCE ONLY

Section 1 Advertisement:

Changed From: Bidders shall be prequalified by the Florida Department of Transportation (FDOT) in order to be eligible to bid. All prequalified Contractors submitting a bid must include with their bid proposal a copy of their FDOT Certificate of Qualification.

Changed to: ~~Bidders shall be prequalified by the Florida Department of Transportation (FDOT) in order to be eligible to bid. All prequalified Contractors submitting a bid must include with their bid proposal a copy of their FDOT Certificate of Qualification.~~

NOTE: Items that are ~~struck through~~ are deleted. Items that are underlined have been added or changed. All other terms and conditions remain as stated in ITB.

Andy Dance District 1 | **Greg Hansen** District 2 | **Kim Carney** District 3 | **Leanne Pennington** District 4 | **Pam Richardson** District 5

INSTRUCTIONS:

Receipt of this addendum must be acknowledged as instructed in the solicitation document. Failure to acknowledge receipt of this Addendum may result in the response being deemed non-responsive.

All questions, clarifications, and inquiries relating to this solicitation, should be posted in OpenGov in the "Questions" space provided. If you require assistance with navigating OpenGov, contact the Office of Procurement and Contracts at purchasing@flaglercounty.gov

It is the bidder/proposer's responsibility to become familiar with and fully informed regarding the terms, conditions and specifications of this solicitation. Lack of understanding and misinterpretation of any portions of this solicitation shall not be cause for withdrawal of your response after opening or for subsequent protest of award.

END OF ADDENDUM NO. 1

County of Flagler
Financial Services
E. John Brower MBA, CGFO, CPM, Director
1769 East Moody Boulevard | Building 2, Bunnell, FL 32110

[SABOUNGI CONSTRUCTION, INC.] RESPONSE DOCUMENT REPORT

ITB No. 26-ITB-018

Air Traffic Control Tower Rehabilitation

RESPONSE DEADLINE: August 14, 2026 at 10:00 am

Report Generated: Friday, August 14, 2026

Saboungi Construction, Inc. Response

CONTACT INFORMATION

Company:
Saboungi Construction, Inc.

Email:
estimating@saboungiconstruction.com

Contact:
Hassan Saboungi

Address:
290A North U.S. Highway 1
Ormond Beach, FL 32174

Phone:
(386) 672-2077

Website:
saboungiconstruction.com

Submission Date:
Aug 14, 2026 9:43 AM (Eastern Time)

ADDENDA CONFIRMATION

Addendum #1
Confirmed Aug 12, 2026 2:25 PM by Saboungi Construction

QUESTIONNAIRE

1. Bidders Checklist*

Please download the below documents, complete, and upload.

- Bidders_Check_List.pdf

Bidders_Check_List.pdf

2. Bid Bond

BID BOND*
Please download the below documents, complete, and upload.

- Bid_Bond_Form.pdf

Completed_Bid_Bond.pdf

3. Forms/Documentation

BID SUBMITTAL FORM*
Please download the below documents, complete, and upload.

- Bid_Form.pdf

Bid_Form.pdf

AFFIDAVIT OF NON-COLLUSION*
Please download the below documents, complete, and upload.

- AFFIDAVIT_OF_NON-COLLUSION_...

Affidavit_of_Non-Collusion.pdf

HUMAN TRAFFICKING ATTESTATION PURSUANT TO SECTION 787.06, FLORIDA STATUTES*
Download the attached form, complete, and upload completed form.

- Anti-Human_Trafficking_Affi...

Anti-Human_Trafficking_Laws.pdf

CERTIFICATION OF COMPLIANCE WITH FLORIDA TRENCH SAFETY ACT*
Please download the below documents, complete, and upload.

- CERTIFICATION_OF_COMPLIANCE...

Trench_Safety_Act.pdf

DRUG-FREE WORKPLACE*
Please download the below documents, complete, and upload.

- DRUG_FREE_WORKPLACE_CERTIFI...

Drug_Free_Workplace_Certificate.pdf

E-VERIFY ACKNOWLEDGEMENT*
Please download the below documents, complete, and upload.

- E-Verify_Acknowledgement_.pdf

E-Verify.pdf

LIST OF PROPOSED SUBCONTRACTORS

Please download the below documents, complete, and upload.

- LIST_OF_PROPOSED_SUBCONTRAC...

LIST_OF_PROPOSED_SU.pdf

SWORN STATEMENT PURSUANT TO SECTION 287.133 FS PUBLIC ENTITY CRIMES*
Please download the below documents, complete, and upload.

- SWORN_STATEMENT_PURSUANT_TO...

Sworn_Statement.pdf

W-9*
Please attach current W-9 Form

Updated_Saboungi_Construction_W9.pdf

VENDOR INFORMATION FORM*
Please download the below documents, complete, and upload.

- VENDOR_INFORMATION_.pdf

Vendor_Information.pdf

PROOF OF INSURANCE *
Please provide Proof of Insurance - evidence of required insurance coverage or proof of insurability in the amounts indicated. If available, a properly completed ACORD Form is preferable. Upon award, final forms must contain the correct solicitation and/or project number and Flagler County contact person.

Firms that have owner/operators that have filed a "Notice of Election to be Exempt" shall submit a copy with the response

COI.pdf

4. Acknowlegements

REGISTRATION ON SAM.GOV*
For any federally funded project, bidder agrees to register on SAM.gov if awarded a contract under this solicitation.

Yes

PLEASE PROVIDE YOUR UEI#*
CTJ8H17WBJV6

REGISTRATION ON SUNBIZ.ORG*
Yes

PLEASE PROVIDE YOUR SUNBIZ.ORG DOCUMENT NUMBER*
F86301

PLEASE UPLOAD YOUR SUNBIZ.ORG CERTIFICATE.*
State_of_Florida_Department_of_State_Certificate_of_Status.pdf

PRICE TABLES

BID SCHEDULE A - STRUCTURAL REPAIRS AND REPLACEMENTS

Line Item	Spec.	Description	Quantity	Unit of Measure	Unit Cost	Total
1	--	GENERAL REQUIREMENTS	1	LS	$58,300.00	$58,300.00

Line Item	Spec.	Description	Quantity	Unit of Measure	Unit Cost	Total
2	C-105	MOBILIZATION (10% MAXIMUM)	1	LS	$38,720.00	$38,720.00
3	--	REPAIR, PATCH, OR RESTORE EXISTING ATCT CONCRETE WALLS	1	LS	$8,800.00	$8,800.00
4	--	REMOVE AND REPLACE WITH NEW, ATCT TOWER CAB CATWALK WITH NEW ALUMINUM BEAMS, STRUCTURAL GRATING, AND GUARDRAILS	1	LS	$187,000.00	$187,000.00
5	--	CLEAN, REMOVE CORROSION, AND INSPECT ATCT CAB/CATWALK STRUCTURAL STEEL	1	LS	$22,000.00	$22,000.00
6	GP-80	CONSTRUCTION SAFETY AND PHASING PLAN COMPLIANCE (MOT)	1	LS	$3,300.00	$3,300.00
TOTAL						**$318,120.00**

BID SCHEDULE A - STRUCTURAL REPAIRS AND REPLACEMENTS (ALLOWANCES)

Line Item	Spec.	Description	Quantity	Unit of Measure	Unit Cost	Total
7	--	ATCT CAB/CATWALK STRUCTURAL STEEL REPLACEMENT ALLOWANCE	1	ALLOW	$75,000.00	$75,000.00
TOTAL						**$75,000.00**

BID SCHEDULE B - ARCHITECTURAL REPAIRS AND REPLACEMENTS

Line Item	Spec.	Description	Quantity	Unit of Measure	Unit Cost	Total
8	--	GENERAL REQUIREMENTS	1	LS	$53,900.00	$53,900.00

Line Item	Spec.	Description	Quantity	Unit of Measure	Unit Cost	Total
9	C-105	MOBILIZATION (10% MAXIMUM)	1	LS	$27,500.00	$27,500.00
10	--	REMOVE AND REPLACE EXISTING ROOF SYSTEM INCLUDING INSULATION AND DRAINS	1	LS	$35,200.00	$35,200.00
11	--	REMOVE AND REPLACE WITH NEW, LIGHTNING PROTECTION SYSTEM	1	LS	$33,000.00	$33,000.00
12	--	REMOVE AND REPLACE METAL WALL PANEL SYSTEM AND COPING CAP	1	LS	$15,070.00	$15,070.00
13	--	REMOVE AND REPLACE ROOF HATCH AND LADDER	1	LS	$4,950.00	$4,950.00
14	--	REMOVE AND REPLACE HVAC CURBS	1	LS	$5,500.00	$5,500.00
15	--	REMOVE AND REPLACE WINDOW SEALANT ON WINDOWS IN EXTERIOR CONCRETE WALL PANELS	1	LS	$8,800.00	$8,800.00
16	--	REPAIR WINDOWS ON THE TOP FLOOR OF THE ATCT	1	LS	$13,200.00	$13,200.00
17	--	REMOAVE AND REPLACE JOINT SEALANT & REPAINT ATCT EXTERIOR WALLS	1	LS	$44,000.00	$44,000.00
18	--	ATCT INTERIOR REPAIRS AND REHABILITATION	1	LS	$19,800.00	$19,800.00
19	--	REMOVE AND REPLACE CATWALK ACCESS DOOR	1	LS	$1,100.00	$1,100.00
20	--	REMOVE AND REPLACE EXTERIOR HOLLOW METAL DOOR AND DOOR HARDWARE	1	LS	$2,200.00	$2,200.00
21	GP-80	CONSTRUCTION SAFETY AND PHASING PLAN COMPLIANCE (MOT)	1	LS	$3,300.00	$3,300.00

Line Item	Spec.	Description	Quantity	Unit of Measure	Unit Cost	Total
TOTAL						**$267,520.00**

BID SCHEDULE B - ARCHITECTURAL REPAIRS AND REPLACEMENTS (ALLOWANCES)

Line Item	Spec.	Description	Quantity	Unit of Measure	Unit Cost	Total
22	--	UNFORESEEN ARCHITECTURAL REPAIRS ALLOWANCE	1	ALLOW	$15,000.00	$15,000.00
TOTAL						**$15,000.00**

BID SCHEDULE C - MECHANICAL REPAIRS AND REPLACEMENTS

Line Item	Spec.	Description	Quantity	Unit of Measure	Unit Cost	Total
23	--	GENERAL REQUIREMENTS	1	LS	$9,097.00	$9,097.00
24	C-105	MOBILIZATION (10% MAXIMUM)	1	LS	$14,190.00	$14,190.00
25	--	REMOVE AND REPLACE 1-TON MINI SPLIT AHU AND CU	1	LS	$6,600.00	$6,600.00
26	--	REMOVE AND REPLACE ALL PTAC UNITS	1	LS	$30,800.00	$30,800.00
27	--	REMOVE AND REPLACE ROOFTOP RTU'S	1	LS	$36,300.00	$36,300.00
28	--	REMOVE AND REPLACE TOWER CAB ACOUSTIC TILES & AIR TERMINAL DEVICES	1	LS	$16,500.00	$16,500.00
29	--	REROUTE CONDESATE DRAIN LINES DOWN BUILDING EXTERIOR THROUGH ATCT CATWALK	1	LS	$11,000.00	$11,000.00

Line Item	Spec.	Description	Quantity	Unit of Measure	Unit Cost	Total
30	GP-80	CONSTRUCTION SAFETY AND PHASING PLAN COMPLIANCE (MOT)	1	LS	$2,750.00	$2,750.00
TOTAL						**$127,237.00**

BID SCHEDULE C - MECHANICAL REPAIRS AND REPLACEMENTS (ALLOWANCES)

Line Item	Spec.	Description	Quantity	Unit of Measure	Unit Cost	Total
31	--	UNFORESEEN MECHANICAL REPAIRS ALLOWANCE	1	ALLOW	$15,000.00	$15,000.00
TOTAL						**$15,000.00**

BID SCHEDULE D - ELECTRICAL REPAIRS AND REPLACEMENTS

Line Item	Spec.	Description	Quantity	Unit of Measure	Unit Cost	Total
32	--	GENERAL REQUIREMENTS	1	LS	$16,940.00	$16,940.00
33	C-105	MOBILIZATION (10% MAXIMUM)	1	LS	$10,340.00	$10,340.00
34	--	PERFORM FUNCTION TESTING OF BACKUP GENERATOR AND PROVIDE REPORT	1	LS	$4,400.00	$4,400.00
35	--	REFEED ALL EXISTING OR PROPOSED MECHANICAL UNITS	1	LS	$13,200.00	$13,200.00
36	--	REMOVE AND REPLACE TWO (2) BUILDING EXTERIOR LIGHTS WITH LED LIGHTS	1	LS	$2,200.00	$2,200.00
37	--	INSTALL NEW LED ATCT BUILDING UPLIGHTING	1	LS	$6,600.00	$6,600.00

Line Item	Spec.	Description	Quantity	Unit of Measure	Unit Cost	Total
38	--	REMOVE AND REPLACE ALL BUILDING INTERIOR LIGHT FIXTURES WITH LED EQUIVALENT	1	LS	$33,000.00	$33,000.00
39	GP-80	CONSTRUCTION SAFETY AND PHASING PLAN COMPLIANCE (MOT)	1	LS	$2,750.00	$2,750.00
TOTAL						$89,430.00

BID SCHEDULE D - ELECTRICAL REPAIRS AND REPLACEMENTS (ALLOWANCES)

Line Item	Spec.	Description	Quantity	Unit of Measure	Unit Cost	Total
40	--	UNFORESEEN ELECTRICAL REPAIRS ALLOWANCE	1	ALLOW	$15,000.00	$15,000.00
TOTAL						$15,000.00

BID SCHEDULE E - ACCESS CONTROL SYSTEM REPLACEMENT

Line Item	Spec.	Description	Quantity	Unit of Measure	Unit Cost	Total
41	--	GENERAL REQUIREMENTS	1	LS	$7,700.00	$7,700.00
42	C-105	MOBILIZATION (10% MAXIMUM)	1	LS	$5,500.00	$5,500.00
43	--	REMOVE AND REPLACE EXTERIOR VEHICULAR GATE ACCESS CONTROL SYSTEM	1	LS	$33,000.00	$33,000.00
44	--	REMOVE AND REPLACE ATCT EXTERIOR BUILDING AND ELEVATOR ACCESS COTNROL SYSTEMS	1	LS	$33,000.00	$33,000.00

Line Item	Spec.	Description	Quantity	Unit of Measure	Unit Cost	Total
45	--	PROVIDE SYNCED ACCESS CONTROL FOR EXTERIOR VEHICULAR GATE, BUILDING ACCESS, AND ELEVATOR ACCESS (SINGLE CARD SYSTEM)	1	LS	$11,000.00	$11,000.00
46	GP-80	CONSTRUCTION SAFETY AND PHASING PLAN COMPLIANCE (MOT)	1	LS	$1,650.00	$1,650.00
TOTAL						**$91,850.00**

BID SCHEDULE F - CIVIL/SITE IMPROVEMENTS

Line Item	Spec.	Description	Quantity	Unit of Measure	Unit Cost	Total
47	--	GENERAL REQUIREMENTS	1	LS	$7,700.00	$7,700.00
48	C-105	MOBILIZATION (10% MAXIMUM)	1	LS	$2,420.00	$2,420.00
49	P-632	SEAL-COAT/REJUVENATE EXISTING PARKING LOT ASPHALT PAVEMENT	3,500	SF	$2.75	$9,625.00
50	--	RE-PAINT EXISTING BOLLARDS	2	EACH	$110.00	$220.00
51	--	REMOVE, REINSTALL, AND PAINT CONCRETE PARKING BLOCKS (YELLOW)	5	EACH	$220.00	$1,100.00
52	T-904	SODDING AND RESTORATION	1	LS	$1,650.00	$1,650.00
53	GP-80	CONSTRUCTION SAFETY AND PHASING PLAN COMPLIANCE (MOT)	1	LS	$1,650.00	$1,650.00
TOTAL						**$24,365.00**

BIDDERS CHECKLIST

BID SUBMITTAL – EXCEL SPREADSHEET BID FORM

1. Fill in date submitted and by whom.
2. Enter prices in figures in highlighted column of Excel spreadsheet. Initial and date any changes or erasures of words or figures made after printing.
3. Fill in date for addenda received. If no addenda have been received, write in words "none".
4. Fill in name of Individual or Corporation and address.
5. Sign and seal bid and have signature witnessed by two (2) witnesses.
6. Submit one proposal form with original signatures.
7. Submit any required certifications and other data for proposed alternates, as follow:

BID SUBMITTAL CHECKLIST

✓ Bid Bond

✓ Bid Form

✓ Sworn Statement Pursuant to Section 287.133 (3)(a) F.S. in Public Entity Crimes

✓ Vendor Information

✓ Vendor W-9 Form

✓ Trench Safety Certification

✓ Affidavit of Non-Collusion

✓ Drug-Free Workplace Certificate

✓ E-Verify Acknowledgement

✓ List of Proposed Subcontractors

✓ Anti-Human Trafficking Affidavit

N/A Initial Project Schedule

N/A* FDOT Prequalification Documentation (Certificate of Qualification) for the following categories

*See Q&A #2 and Addendum 1

1) Flexible Pavement
2) Hot Plant-Mixed Bituminus Courses
3) Drainage
4) Grading

BID BOND
26-ITB-018
Air Traffic Control Tower Rehabilitation

KNOW ALL MEN BY THESE PRESENTS, that we **Saboungi Construction, Inc.** (hereinafter called **Principal**) and **Westfield Insurance Company** (herein after called the **Surety**) a corporation chartered and existing under the laws of the State of **Ohio** with its principal offices in **Medina County** and authorized to do business in the State of Florida, in the full and just sum of **-FIVE PERCENT (5%) OF PROPOSED BID-** dollars ($ **---5%---**) Good and lawful money of the United States of America to be paid upon demand of the Flagler County Board of County Commissioners (hereinafter call **County**), to which payment will and truly to be made we bind ourselves, our heirs, executors, administrators and assigns, jointly and severally and firmly by these presents,

WHEREAS, the Principal is about to submit, or has submitted to the County a Bid for the "**26-ITB-013 FIN TAXILANE REHABILITATION"** in and for the said County of Flagler, Florida.

WHEREAS, the **Principal** desires to file this bond in accordance with law, in lieu of a certified or cashier's check otherwise required to accompany this Bid.

NOW THEREFORE, the conditions of this obligation are such that if the Bid be accepted the **Principal** shall within ten (10) days after the receipt of notification of the acceptance thereof execute a Contract in accordance with the Bid and upon the terms, conditions and unit or lump sum prices set forth therein, in the form and manner required by the **County**, in an amount not less than the total Contract price as indicated by the approximate quantities shown in the Bid, in form and with security satisfactory to the said **County**, then this obligation to be void; otherwise to be and remain in full force and virtue in law; and the **Surety** shall upon the failure of the **Principal** to comply with any or all of the foregoing requirements within the time specified above, immediately pay to the aforesaid **County** upon demand the amount hereof in good and lawful money of the United States of America, not as a penalty, but as liquidated damages.

The exclusive jurisdiction and venue for resolving any dispute relating to this bond shall be the Circuit Court of Flagler County, Florida.

IN TESTIMONY WHEREOF, the **Principal** and **Surety** have caused these presents to be duly signed and sealed this 14th day of August, 2026.

Signed Sealed and Delivered in the Presence of:

PRINCIPAL: Saboungi Construction, Inc.
(Typed or Printed Name)

WITNESS: _____
(Signature)

_____
(Typed or Printed Name)

BY: _____
(Signature)

Hassan Saboungi, Pres
(Typed or Printed Name)

WITNESS: _____
(Signature)

Natalie C. Demers
(Typed or Printed Name)

SURETY: Westfield Insurance Company
(Typed or Printed Name)

BY (AGENT): _____
(Signature)

Don Bramlage
(Typed or Printed Name)

Attorney-in-Fact & Florida Resident Agent
(Title) Inquiries: 407 330 3990

ADDRESS: P. O. Box 5001

Westfield Center, OH 44251

General
Power
of Attorney

CERTIFIED COPY

POWER NO. **0994592 00**

Westfield Insurance Co.
Westfield National Insurance Co.
Ohio Farmers Insurance Co.

Westfield Center, Ohio

Know All Men by These Presents, That WESTFIELD INSURANCE COMPANY, WESTFIELD NATIONAL INSURANCE COMPANY and OHIO FARMERS INSURANCE COMPANY, corporations, hereinafter referred to individually as a "Company" and collectively as "Companies," duly organized and existing under the laws of the State of Ohio, and having its principal office in Westfield Center, Medina County, Ohio, do by these presents make, constitute and appoint

DON BRAMLAGE, LAURA D. MOSHOLDER, EDWARD M. CLARK, JOINTLY OR SEVERALLY

of **SANFORD** and State of **FL** its true and lawful Attorney(s)-in-Fact, with full power and authority hereby conferred in its name, place and stead, to execute, acknowledge and deliver **any and all bonds, recognizances, undertakings, or other instruments or contracts of suretyship**- - - -

BID FORM (BS -1)

BID SUBMISSION TO FLAGLER COUNTY, FLORIDA
FOR
26-ITB-018
Air Traffic Control Tower Rehabilitation

TO: Flagler County Board of County Commissioners

SUBMITTED: 08/14/26
(DATE)

BY: Saboungi Construction, Inc.
(Name of Individual or Corporation)

The undersigned, as Bidder, hereby declares that the only person or persons interested in the Bid as principal or principals is or are named herein and that no other person other than herein mentioned has any interest in this Bid or in the Contract to be entered into; that this Bid is made without connection with any other person, company or parties making a Bid, and that it is in all respects fair and in good faith.

I/we certify that this Bid is made without prior understanding, agreement, or connection with any corporation, firm, or person submitting a Bid for the same materials, supplies, or equipment, and is in all respects fair and without collusion or fraud. I agree to abide by all conditions of this Bid. In submitting a Bid to the County of Flagler the Bidder offers and agrees that the Bidder assigns and transfers to the County of Flagler all rights and interest in and to all causes of action it may now or hereafter acquire under the Anti trust laws of the United States and State of Florida for price fixing relating to the particular commodities or services purchased or acquired by the County of Flagler.

The Bidder further declares that he has examined the site of the Work and informed himself fully in regard to all conditions pertaining to the place where the work is to be done, that he has examined the Bid/Contract Documents relative thereto, including but not limited to the Advertisement for Bids, Proposal Form, Form of Contract and Form of Public Construction Bond and Payment Bond, and has read all of the addenda furnished prior to the opening of Bids, as acknowledged below, and that he has satisfied himself relative to the work to be performed.

If this Bid is accepted, the undersigned Bidder agrees to enter into and execute the Contract with Flagler County, Florida on the Contract form specified, of which this Bid, and the other Contract Documents shall be made a part of the performance of work described therein; to furnish the necessary bonds as specified in the Contract Documents prepared on the applicable approved bond form furnished by Flagler County, to furnish all necessary materials, equipment, machinery, maintenance, tools, apparatus, transportation, supervision, labor and all means necessary to construct and complete the work in the manner specified; to furnish the required evidence of the specified insurance; to commence work on the date established by Flagler County and to complete all Contract work as specified in the Contract Documents.

It is understood that all items of work are guaranteed for twelve (12) months from the date of final acceptance, unless otherwise specified.

Acknowledgment is hereby made of the following addenda received since issuance of the Bid/Contract Documents.

Addendum Number	Date
(1)	08/03/26
(2)	
(3)	

Saboungi Construction, Inc.
(Name of Individual or Corporation)

(Signature)

Hassan Saboungi
(Typed or Printed Name)

President
(Title)

CORPORATE SEAL:

WITNESS: _____
(Signature)

Mahmood Saboungi
(Typed or Printed Name)

WITNESS: _____
(Signature)

Erin Lovellette
(Typed or Printed Name)

AFFIDAVIT OF NON-COLLUSION

Project Name: Air Traffic Control Tower Rehabilitation

Project Number: 26-ITB-018

STATE OF FLORIDA

COUNTY OF Volusia

Hassan Saboungi*, being first duly sworn, deposes and says that he (it) is the bidder in the above bid, for Saboungi Construction, Inc., that the only person or persons interested in said bid are named therein that no officer, employee or agent of the Flagler County BCC or of any other bidder is interested in said bid; and that affiant makes the above bid with no past or present collusion with any other person, firm or corporation.

Affiant: Hassan Saboungi Title: President

Sworn and subscribed to before me this 14th day of August

20 26, in the state of Florida, County of Volusia

Attest: _____
Notary Public

My Commission Expires: 11/20/2028

Notary Public State of Florida
Erin Diane Lovelette
My Commission HH 614985
Expires 11/20/2028

(Notary Seal)

*NOTICE: State name of Bidder followed by name of authorized individual (and title) who is signing as Affiant. If Bidder is an individual, state name of Bidder only.

This document must be completed and returned with your Submittal

AFFIDAVIT OF COMPLIANCE WITH ANTI-HUMAN TRAFFICKING LAWS

State of Florida

County of Volusia

In accordance with section 787.06(13), Florida Statutes, the undersigned, on behalf of [Saboungi Construction, Inc.] (the "Firm"), hereby attests under penalty of perjury that the Firm does not use coercion for labor or services as defined in Section 787.06, Florida Statutes, entitled "Human Trafficking."

The undersigned representative of the Firm is authorized to execute this affidavit on behalf of the Firm.

Signed: 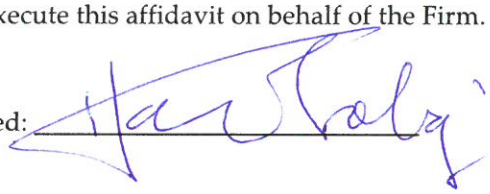

Name: Hassan Saboungi

Title: President

The foregoing was sworn to (or affirmed) and subscribed before me, by means of [physical presence], this 14th day of August 2026 by Hassan Saboungi as President of Saboungi Construction, Inc.. Such person is [✓] personally known to me or [__] produced valid government-issued identification.

(SEAL)

Notary Public State of Florida
Erin Diane Lovellette
My Commission HH 614985
Expires 11/20/2028



Notary

CERTIFICATION OF COMPLIANCE WITH FLORIDA TRENCH SAFETY ACT

Bidder acknowledges that he is solely responsible for complying with the Florida Trench Safety Act (ACT) and Occupational Safety and Health Administrations excavation safety standard 29 CER 1926.650 (Subpart P as amended). Bidder further acknowledges that included in the various items of the proposal and in the Total Bid Price are costs for complying with the Florida Trench Safety Act (90-96, Law of Florida) and the Occupational Safety and Health Administrations excavation safety standards as they may be amended from time-to-time.

BY: Hassan Saboungi
Bidder

Authorized Signature

08/14/26
Date

DRUG FREE WORKPLACE CERTIFICATE

I, the undersigned, in accordance with Florida Statute 287.087, hereby certify that,
(print or type name of firm) Saboungi Construction, Inc.

- Publishes a written statement notifying that the unlawful manufacture, distribution, dispensing, possession or use of a controlled substance is prohibited in the Workplace named above, and specifying actions that will be taken against violations of such prohibition.
- Informs employees about the dangers of drug abuse in the workplace, the firm's policy of maintaining a drug free working environment, and available drug counseling, rehabilitation, and employee assistance programs, and the penalties that may be imposed upon employees for drug use violations.
- Gives each employee engaged in providing commodities or contractual services that are under bid or proposal, a copy of the statement specified above.
- Notifies the employees that as a condition of working on the commodities or contractual services that are under bid or proposal, the employee will abide by the terms of the statement and will notify the employer of any conviction of, please or guilty or nolo contendere to, any violation of Chapter 1893, or of any controlled substance law of the State of Florida or the United States, for a violation occurring in the workplace, no later than five (5) days after such conviction, and requires employees to sign copies of such written statement to acknowledge their receipt.
- Imposes a sanction on, or requires the satisfactory participation in, a drug abuse assistance or rehabilitation program, if such is available in the employee's community, by any employee who is so convicted.
- Makes a good faith effort to continue to maintain a drug free workplace through the implementation of the Drug Free Workplace program.
- "As a person authorized to sign this statement, I certify that the above named business, firm or corporation complies fully with the requirements set forth herein".

Authorized Signature

08/14/26
Date Signed

State of: Florida

County of: Volusia

Sworn to and subscribed before me this 14th day of August, 2026

Personally known ✓ or Produced Identification N/A
(Specify Type of Identification)

Signature of Notary

Notary Public State of Florida
Erin Diane Lovellette
My Commission HH 614985
Expires 11/20/2028

My Commission Expires: 11/20/2028

This document must be completed and returned with your Submittal

E-VERIFY
ACKNOWLEDGEMENT

Contract No: 26-ITB-018
Financial Project No(s): 164191
Project Description: Air Traffic Control Tower Rehabilitation

Contractor acknowledges and agrees to the following:

Contractor shall utilize the U.S. Department of Homeland Security's E-Verify system to verify the employment eligibility of all new employees hired by the Contractor during the term of the Contract and shall expressly require any subcontractors performing work or providing services pursuant to the Contract to likewise utilize the U.S. Department of Homeland Security's E-Verify system to verify the employment eligibility of all new employees hired by the subcontractor during the Contract term.

Company/Firm: Saboungi Construction, Inc.

Authorized Signature: 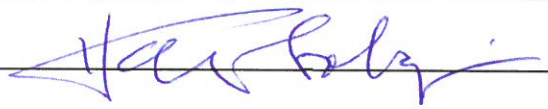

Title: President

Date: 08/14/26

This document must be completed and returned with your Submittal

LIST OF PROPOSED SUBCONTRACTORS

List shall include the name of each Subcontractor where the amount of their work exceeds five percent (5%) of the Contract Price. Indicate percentage of Contract Price for each subcontractor listed. Attach additional information as needed.

Subcontractor No. 1

Name: East Coast Ornamental Welding
Description of Work: Aluminum Catwalk
Percent of Contract Price: 8%
Previous Experience Together: Yes/No

Subcontractor No. 2

Name: Credible Air Conditioning
Description of Work: A/C Replacement
Percent of Contract Price: 6%
Previous Experience Together: Yes/No

Subcontractor No. 3

Name: LED Electrical
Description of Work: Electrical/Lighting
Percent of Contract Price: 7%
Previous Experience Together: Yes/No

Subcontractor No. 4

Name:
Description of Work:
Percent of Contract Price:
Previous Experience Together: Yes/No

Subcontractor No. 5

Name:
Description of Work:
Percent of Contract Price:
Previous Experience Together: Yes/No

This document must be completed and returned with your Submittal

SWORN STATEMENT PURSUANT TO SECTION 287.133 (3) (a), FLORIDA STATUTES, IN PUBLIC ENTITY CRIMES

THIS FORM MUST BE SIGNED AND SWORN TO IN THE PRESENCE OF A NOTARY PUBLIC OR OTHER OFFICIAL AUTHORIZED TO ADMINISTER OATHS.

1. This sworn statement is submitted to

County of Flagler

by Hassan Saboungi - President
[print individual's name and title]

for Saboungi Construction, Inc.
[print name of entity submitting sworn statement]

whose business address is 290A North U.S. Hwy 1 Ormond Beach, FL 32174

(if applicable) its Federal Employer Identification Number (FEIN) is 59-2219055

(If the entity has no FEIN, include the Social Security Number of the individual signing this

sworn statement) : N/A.

2. I understand that a "public entity crime" as defined in Paragraph 287.133 (a)(g), Florida Statutes, means a violation of any public entity or with an agency or political subdivision of any other State or of the United States, including, but not limited to, any Bid or Contract for goods or services to be provided to any public entity or an agency or political subdivision of any other state or of the United States and involving antitrust, fraud, theft, bribery, collusion, racketeering, conspiracy, or material misrepresentation.

3. I understand that *"convicted"* or *"conviction"* as defined in Paragraph 287.133 (a)(b), Florida Statutes, means a finding of guilt or a conviction of a public entity crime, with or without an adjudication of guilt, in any federal or state trial court of record relating to charges brought by indictment or information after July 1, 1989, as a result of a jury verdict, non-jury trial, or entry of a plea of guilty or nolo contendere.

4. I understand that an *"affiliate"* as defined in Paragraph 287.133 (1)(a), Florida Statutes, means:

   a. A predecessor or successor of a person convicted of a public entity crime; or

   b. An entity under the control of any natural person who is active in the management of the entity and who has been convicted of a public entity crime. The term *"affiliate"* includes those officers, directors, executives, partners, shareholders, employees, members, and agents who are active in the management of an

affiliate. The ownership by one person of shares constituting a controlling interest in another person, or a pooling of equipment or income among persons when not for fair market value under an arm's length agreement, shall be a prima facie case that one person controls another person. A person who knowingly enters into a joint venture with a person who has been convicted of a public entity crime in Florida during the preceding thirty-six (36) months shall be considered an affiliate.

5. I understand that a *"person"* as defined in Paragraph 287.133(1)(e), Florida Statutes, means any natural person or entity organized under the laws of any state or of the United States with the legal power to enter into a binding Contract and which Bids or applies to Bid on Contracts for the provisions of goods or services let by a public entity, or which otherwise transacts or applies to transact business with a public entity. The term "person" includes those officers, directors, executives, partners, shareholders, employees, members, and agents who are active in management of an entity.

6. Based on information and belief, the statement which I have marked below is true in relation to the entity submitting this sworn statement: [indicate which statement applies]

✓ Neither the entity submitting this sworn statement, nor any of its officers, directors, executives, partners, shareholders, employees, members, or agents who are active in the management of the entity, nor any affiliate of the entity has been charged with and convicted of a public entity crime subsequent to July 1, 1989.

_____ The entity submitting this sworn statement, or one or more of its officers, directors, executives, partners, shareholders, employees, members, or agents who are active in the management of the entity, or an affiliate of the entity has been charged with and convicted of a public entity crime subsequent to July 1, 1989.

_____ The entity submitting this sworn statement, or one or more of its officers, directors, executives, partners, shareholders, employees, members, or agents who are active in the management of the entity, or an affiliate of the entity has been charged with and convicted of a public entity crime subsequent to July 1, 1989. However, there has been a subsequent proceeding before a Hearing Officer of the State of Florida, Division of Administrative Hearings and the Final Order entered by the Hearing Officer determined that it was not in the public interest to place the entity submitting this sworn statement on the convicted vendor list [attach a copy of the final order].

I UNDERSTAND THAT THE SUBMISSION OF THIS FORM TO THE CONTRACTING OFFICER FOR THE PUBLIC ENTITY IDENTIFIED IN

PARAGRAPH 1 (ONE) ABOVE IS FOR THAT PUBLIC ENTITY ONLY AND, THAT THIS FORM IS VALID THROUGH DECEMBER 31, OF THE CALENDAR YEAR IN WHICH IT IS FILED. I ALSO UNDERSTAND THAT I AM REQUIRED TO INFORM THE PUBLIC ENTITY PRIOR TO ENTERING INTO A CONTRACT.

[signature]
Hassan Saboungi - President

[date] 08/14/26

STATE OF FLORIDA

COUNTY OF Volusia

PERSONALLY APPEARED BEFORE ME, the undersigned authority

Hassan Saboungi who, after first being sworn by me, affixed his signature in
[Name of Individual Signing]

the space provided above on this 14th day of August 2026 .

NOTARY PUBLIC

My commission expires: 11/20/2028

Personally Known ✓ OR Produced Identification ____

Type of Identification Produced _____

Notary Public State of Florida
Erin Diane Lovellette
My Commission HH 614985
Expires 11/20/2028

Form **W-9**
(Rev. March 2024)
Department of the Treasury
Internal Revenue Service

Request for Taxpayer Identification Number and Certification

Go to *www.irs.gov/FormW9* for instructions and the latest information.

Give form to the requester. Do not send to the IRS.

Before you begin. For guidance related to the purpose of Form W-9, see *Purpose of Form*, below.

Print or type. See *Specific Instructions* on page 3.

1 Name of entity/individual. An entry is required. (For a sole proprietor or disregarded entity, enter the owner's name on line 1, and enter the business/disregarded entity's name on line 2.)

Saboungi Construction, Inc.

2 Business name/disregarded entity name, if different from above.

3a Check the appropriate box for federal tax classification of the entity/individual whose name is entered on line 1. Check only **one** of the following seven boxes.

☐ Individual/sole proprietor ☑ C corporation ☐ S corporation ☐ Partnership ☐ Trust/estate

☐ LLC. Enter the tax classification (C = C corporation, S = S corporation, P = Partnership) . . . . .

Note: Check the "LLC" box above and, in the entry space, enter the appropriate code (C, S, or P) for the tax classification of the LLC, unless it is a disregarded entity. A disregarded entity should instead check the appropriate box for the tax classification of its owner.

☐ Other (see instructions)

3b If on line 3a you checked "Partnership" or "Trust/estate," or checked "LLC" and entered "P" as its tax classification, and you are providing this form to a partnership, trust, or estate in which you have an ownership interest, check this box if you have any foreign partners, owners, or beneficiaries. See instructions . . . . . ☐

4 Exemptions (codes apply only to certain entities, not individuals; see instructions on page 3):

Exempt payee code (if any)

Exemption from Foreign Account Tax Compliance Act (FATCA) reporting code (if any)

(Applies to accounts maintained outside the United States.)

5 Address (number, street, and apt. or suite no.). See instructions.

290A North U.S. Hwy 1

6 City, state, and ZIP code

Ormond Beach, FL 32174

Requester's name and address (optional)

7 List account number(s) here (optional)

Part I Taxpayer Identification Number (TIN)

Enter your TIN in the appropriate box. The TIN provided must match the name given on line 1 to avoid backup withholding. For individuals, this is generally your social security number (SSN). However, for a resident alien, sole proprietor, or disregarded entity, see the instructions for Part I, later. For other entities, it is your employer identification number (EIN). If you do not have a number, see *How to get a TIN*, later.

Note: If the account is in more than one name, see the instructions for line 1. See also *What Name and Number To Give the Requester* for guidelines on whose number to enter.

Social security number

			–			–				

or

Employer identification number

5	9	–	2	2	1	9	0	5	5

Part II Certification

Under penalties of perjury, I certify that:

1. The number shown on this form is my correct taxpayer identification number (or I am waiting for a number to be issued to me); and
2. I am not subject to backup withholding because (a) I am exempt from backup withholding, or (b) I have not been notified by the Internal Revenue Service (IRS) that I am subject to backup withholding as a result of a failure to report all interest or dividends, or (c) the IRS has notified me that I am no longer subject to backup withholding; and
3. I am a U.S. citizen or other U.S. person (defined below); and
4. The FATCA code(s) entered on this form (if any) indicating that I am exempt from FATCA reporting is correct.

Certification instructions. You must cross out item 2 above if you have been notified by the IRS that you are currently subject to backup withholding because you have failed to report all interest and dividends on your tax return. For real estate transactions, item 2 does not apply. For mortgage interest paid, acquisition or abandonment of secured property, cancellation of debt, contributions to an individual retirement arrangement (IRA), and, generally, payments other than interest and dividends, you are not required to sign the certification, but you must provide your correct TIN. See the instructions for Part II, later.

Sign Here | **Signature of U.S. person** [signature], Pres | **Date** 10/20/25

General Instructions

Section references are to the Internal Revenue Code unless otherwise noted.

Future developments. For the latest information about developments related to Form W-9 and its instructions, such as legislation enacted after they were published, go to *www.irs.gov/FormW9*.

What's New

Line 3a has been modified to clarify how a disregarded entity completes this line. An LLC that is a disregarded entity should check the appropriate box for the tax classification of its owner. Otherwise, it should check the "LLC" box and enter its appropriate tax classification.

New line 3b has been added to this form. A flow-through entity is required to complete this line to indicate that it has direct or indirect foreign partners, owners, or beneficiaries when it provides the Form W-9 to another flow-through entity in which it has an ownership interest. This change is intended to provide a flow-through entity with information regarding the status of its indirect foreign partners, owners, or beneficiaries, so that it can satisfy any applicable reporting requirements. For example, a partnership that has any indirect foreign partners may be required to complete Schedules K-2 and K-3. See the Partnership Instructions for Schedules K-2 and K-3 (Form 1065).

Purpose of Form

An individual or entity (Form W-9 requester) who is required to file an information return with the IRS is giving you this form because they

VENDOR INFORMATION

In addition to General conditions, your BID may be disqualified if the following vendor information is not returned with your BID.

Vendor is:

(✓) Corporation
( ) Partnership
( ) Sole Proprietorship
( ) Other _____ (Explain)

Federal Employer Identification
Number or Social Security Number: 59-2219055

Do you collect Florida State Sales Tax? (✓) Yes ( ) No

Firm Name: Saboungi Construction, Inc.

Mailing Address: 290A North U.S. Hwy 1

Ormond Beach, FL 32174

Telephone No. 386-672-2077 Fax No. 386-673-4189

Email Address: estimating@saboungiconstruction.com Web Address: www.saboungiconstruction.com

Commodity or Service Supply: General Contractor

If remittance address is different from the mailing address so indicate below.

Firm Name: _____

Mailing Address: _____

_____

Submitted by: _____

Name & Title Printed: Hassan Saboungi - President

This document must be completed and returned with your Submittal

CERTIFICATE OF LIABILITY INSURANCE

DATE (MM/DD/YYYY): 08/13/2026

THIS CERTIFICATE IS ISSUED AS A MATTER OF INFORMATION ONLY AND CONFERS NO RIGHTS UPON THE CERTIFICATE HOLDER. THIS CERTIFICATE DOES NOT AFFIRMATIVELY OR NEGATIVELY AMEND, EXTEND OR ALTER THE COVERAGE AFFORDED BY THE POLICIES BELOW. THIS CERTIFICATE OF INSURANCE DOES NOT CONSTITUTE A CONTRACT BETWEEN THE ISSUING INSURER(S), AUTHORIZED REPRESENTATIVE OR PRODUCER, AND THE CERTIFICATE HOLDER.

IMPORTANT: If the certificate holder is an ADDITIONAL INSURED, the policy(ies) must have ADDITIONAL INSURED provisions or be endorsed. If SUBROGATION IS WAIVED, subject to the terms and conditions of the policy, certain policies may require an endorsement. A statement on this certificate does not confer rights to the certificate holder in lieu of such endorsement(s).

PRODUCER	CONTACT NAME: Julie Kuhlman	
Brown & Brown Insurance Services, Inc. P.O. Box 2412 Daytona Beach FL 32115-2415	PHONE (A/C, No, Ext): (386) 252-9601	FAX (A/C, No): (386) 239-5729
	E-MAIL ADDRESS: Julie.Kuhlman@bbrown.com	

INSURED	INSURER(S) AFFORDING COVERAGE	NAIC #
SABOUNGI CONSTRUCTION, INC. 290-A NORTH US HIGHWAY 1 ORMOND BEACH FL 32174	INSURER A: Cumis Specialty Insurance Company, Inc.	12758
	INSURER B: Palomar Excess and Surplus Insurance Company	16754
	INSURER C: XL Specialty Insurance Company	37885
	INSURER D: American Interstate Insurance Company	31895
	INSURER E: Certain Underwriters at Lloyd's London	
	INSURER F: Geico Marine Insurance Company	37923

COVERAGES **CERTIFICATE NUMBER:** 26-27 **REVISION NUMBER:**

THIS IS TO CERTIFY THAT THE POLICIES OF INSURANCE LISTED BELOW HAVE BEEN ISSUED TO THE INSURED NAMED ABOVE FOR THE POLICY PERIOD INDICATED. NOTWITHSTANDING ANY REQUIREMENT, TERM OR CONDITION OF ANY CONTRACT OR OTHER DOCUMENT WITH RESPECT TO WHICH THIS CERTIFICATE MAY BE ISSUED OR MAY PERTAIN, THE INSURANCE AFFORDED BY THE POLICIES DESCRIBED HEREIN IS SUBJECT TO ALL THE TERMS, EXCLUSIONS AND CONDITIONS OF SUCH POLICIES. LIMITS SHOWN MAY HAVE BEEN REDUCED BY PAID CLAIMS.

INSR LTR	TYPE OF INSURANCE	ADDL INSD	SUBR WVD	POLICY NUMBER	POLICY EFF (MM/DD/YYYY)	POLICY EXP (MM/DD/YYYY)	LIMITS	
A	[X] COMMERCIAL GENERAL LIABILITY [ ] CLAIMS-MADE [X] OCCUR GEN'L AGGREGATE LIMIT APPLIES PER: [ ] POLICY [X] PRO-JECT [ ] LOC [ ] OTHER:			PGIA0136400	01/31/2026	01/31/2027	EACH OCCURRENCE DAMAGE TO RENTED PREMISES (Ea occurrence) MED EXP (Any one person) PERSONAL & ADV INJURY GENERAL AGGREGATE PRODUCTS - COMP/OP AGG	$ 1,000,000 $ 100,000 $ 10,000 $ 1,000,000 $ 2,000,000 $ 2,000,000
F	AUTOMOBILE LIABILITY [ ] ANY AUTO [ ] OWNED AUTOS ONLY [X] SCHEDULED AUTOS [X] HIRED AUTOS ONLY [X] NON-OWNED AUTOS ONLY			9300165660-01	06/12/2026	06/12/2027	COMBINED SINGLE LIMIT (Ea accident) BODILY INJURY (Per person) BODILY INJURY (Per accident) PROPERTY DAMAGE (Per accident) PIP	$ 1,000,000 $ $ $ $ 10,000
B	[ ] UMBRELLA LIAB [X] OCCUR [X] EXCESS LIAB [ ] CLAIMS-MADE [ ] DED [X] RETENTION $ 10,000			PESXS018068	01/31/2026	01/31/2027	EACH OCCURRENCE AGGREGATE PROD/COMPL OPS	$ 5,000,000 $ 5,000,000 $ 5,000,000
D	WORKERS COMPENSATION AND EMPLOYERS' LIABILITY ANY PROPRIETOR/PARTNER/EXECUTIVE OFFICER/MEMBER EXCLUDED? (Mandatory in NH) Y/N [Y] If yes, describe under DESCRIPTION OF OPERATIONS below	N/A		AVWCFL3452322026	01/31/2026	01/31/2027	[X] PER STATUTE [ ] OTH-ER E.L. EACH ACCIDENT E.L. DISEASE - EA EMPLOYEE E.L. DISEASE - POLICY LIMIT	 $ 1,000,000 $ 1,000,000 $ 1,000,000
C	INLAND MARINE			UM00061199MA26A	01/31/2026	01/31/2027	LEASED/RENTED DED	$100,000 $1,000

DESCRIPTION OF OPERATIONS / LOCATIONS / VEHICLES (ACORD 101, Additional Remarks Schedule, may be attached if more space is required)

SEE NOTES FOR POLICY COVERAGE FORMS
PROJECT: 26-ITB-018 - AIR TRAFFIC CONTROL TOWER REHABILITATION
THE FLORIDA DEPARTMENT OF TRANSPORTATION AND FLAGLER COUNTY BOARD OF COUNTY COMMISSIONERS ARE ADDITIONAL INSURED AND WAIVER OF SUBROGATION APPLIES AS REQUIRED BY WRITTEN CONTRACT AND IF APPLICABLE, PER THE FORMS LISTED ON THE ATTACHED ADDITIONAL REMARKS SCHEDULE.

CERTIFICATE HOLDER

FLAGLER COUNTY BOARD OF COUNTY COMMISSIONERS
GOVERNMENT SERVICES BLDG. #2
1769 E. MOODY BOULEVARD
BUNNELL FL 32110

CANCELLATION

SHOULD ANY OF THE ABOVE DESCRIBED POLICIES BE CANCELLED BEFORE THE EXPIRATION DATE THEREOF, NOTICE WILL BE DELIVERED IN ACCORDANCE WITH THE POLICY PROVISIONS.

AUTHORIZED REPRESENTATIVE

© 1988-2015 ACORD CORPORATION. All rights reserved.

AGENCY CUSTOMER ID: _____

LOC #: _____

ADDITIONAL REMARKS SCHEDULE

AGENCY	NAMED INSURED
Brown & Brown Insurance Services, Inc.	SABOUNGI CONSTRUCTION, INC.
POLICY NUMBER	
CARRIER / NAIC CODE	EFFECTIVE DATE:

ADDITIONAL REMARKS

THIS ADDITIONAL REMARKS FORM IS A SCHEDULE TO ACORD FORM,

FORM NUMBER: 25 **FORM TITLE:** Certificate of Liability Insurance: Notes

CONTRACTOR'S POLLUTION LIABILITY
INSURER E
POLICY #CPLI02223001
TERM: 01/31/2026 - 01/31/2027
AGGREGATE: $2,000,000
CONTRACTOR'S POLLUTION CONDITION LIMIT: $1,000,000

CURRENT BLANKET POLICY FORMS

GENERAL LIABILITY:
1) CG2010 0413- ADDITIONAL INSURED - OWNERS, LESSEES, OR CONTRACTORS - SCHEDULED PERSON OR ORGANIZATION (ADDITIONAL INSURED-ONGOING OPERATIONS)
2) CG2037 0413- ADDITIONAL INSURED - OWNERS, LESSEES, OR CONTRACTORS - COMPLETED OPERATIONS
3) CG2404 1093- WAIVER OF TRANSFER OF RIGHTS OF RECOVERY AGAINST OTHERS TO US (WAIVER OF SUBROGATION) - AUTOMATIC
4) CG2001 0413- PRIMARY AND NONCONTRIBUTORY - OTHER INSURANCE CONDITION

POLLUTION:
1.) CPL AIBLKT 0724 - ADDITIONAL INSURED - BLANKET
2.) CPL PNC 0622 - PRIMARY AND NON-CONTRIBUTORY INSURANCE
3.) CPL WOS22 1023 - WAIVER OF TRANSFER OF RIGHTS OF RECOVERY AGAINST OTHERS TO US

WORKERS COMPENSATION:
1) WC000313 0484 - WAIVER OF OUR RIGHT TO RECOVER FROM OTHERS ENDORSEMENT

EXCESS LIABILITY:
1) CX0001 0413 - EXCESS COVERAGE FORM- (FOLLOW FORM OVER THE GENERAL LIABILITY, AUTO LIABILITY AND EMPLOYERS LIABILITY)

EQUIPMENT:
1.) HCM050 0319 - (LOSS PAYEE)

© 2008 ACORD CORPORATION. All rights reserved.

The ACORD name and logo are registered marks of ACORD

State of Florida
Department of State

I certify from the records of this office that SABOUNGI CONSTRUCTION, INC. is a corporation organized under the laws of the State of Florida, filed on June 22, 1982.

The document number of this corporation is F86301.

I further certify that said corporation has paid all fees due this office through December 31, 2026, that its most recent annual report/uniform business report was filed on February 28, 2026, and that its status is active.

I further certify that said corporation has not filed Articles of Dissolution.

Given under my hand and the Great Seal of the State of Florida at Tallahassee, the Capital, this the Fourteenth day of May, 2026



Secretary of State

Tracking Number: 4612258297CU

To authenticate this certificate,visit the following site,enter this number, and then follow the instructions displayed.

https://services.sunbiz.org/Filings/CertificateOfStatus/CertificateAuthentication

County of Flagler
Financial Services
E. John Brower MBA, CGFO, CPM, Director
1769 East Moody Boulevard | Building 2, Bunnell, FL 32110
(386) 313-4008

NOTICE OF INTENT TO AWARD
ITB No. 26-ITB-018
Air Traffic Control Tower Rehabilitation

RESPONSE DEADLINE: August 14, 2026 at 10:00 am

Thursday, September 10, 2026

Thank you for submitting a bid in response to 26-ITB-018 for Air Traffic Control Tower Rehabilitation. Flagler County has evaluated all submittals received in response to solicitation and intends to award a contract to Saboungi Construction, Inc. Due to the limitations of project grant funding, all bid schedules cannot be awarded at this time. Based on review of the proposal, and the availability of funding, Bid Schedule A & F shall be awarded at this time, and Bid Schedules B, C, D, and E shall not be awarded as part of this solicitation.

Protest Process

Notification

The Office of Procurement and Contracts shall post all recommendations of award available for

review by the public on the Flagler County website. Vendors who submit a solicitation will be notified

by e-mail.

Notice of Intent to File a Protest

1. A respondent adversely affected by an intended decision or action with respect to the initial

award on a solicitation shall file a written notice of intent to file a protest. That notice of intent to file

a protest must be filed with the Procurement and Contract Services Manager or his/her designee no

later than four o'clock (4:00) p.m. on the third (3rd) business day following the date of the notice of

the recommendation of award.

2. In addition, a protest bond in the form of a U.S. Postal Service money order or by a certified

cashier's check in an amount equal to one percent (1%) of the value of the solicitation, but in no

case less than five hundred dollars ($500), nor greater than five thousand dollars ($5,000), payable

to the Flagler County Board of County Commissioners must be delivered with the written notice of

intent to file a protest. Failure to post such bond shall result in the Protest being dismissed by the

Procurement and Contract Services Manager or his/her designee.

3. The notice of intent to file a protest must:

a. Identify the action being protested.

b. Clearly state the basis of the protest, and

c. Clearly state that its purpose is to serve as the notice of intent to file a protest.

4. Failure to provide the proper notice and/or failure to provide the required protest bond shall constitute a waiver of the right to seek any remedy provided under the protest procedure. Once again thank you for participating in this solicitation and for your interest in doing business with Flagler County.

Further information on our protest policy can be found at https://www.flaglercounty.gov/Government/Departments/Financial-Services/Office-of-Procurement-and-Contracts-OPC/Resources, under Procurement Manual.

Sincerely,

Shannon Burnett
Procurement Coordinator
Office of Procurement and ContractsFlagler County Board of County Commissioners

U.S. Department of Transportation Federal Aviation Administration

Orlando Airports District Office: 8427 South Park Circle, Suite 524 Orlando, FL 32819

September 3, 2026

Ms. Leann Pennington
Chair
Flagler County Board of County Commissioners
1769 E. Moody Blvd.
Bunnell, FL 32110

Dear Ms. Pennington:

The Grant Offer for Infrastructure Investment and Jobs Act (IIJA) Project No. 3-12-0009-033-2026 at Flagler Exec Airport is attached for execution. This letter outlines the steps you must take to properly enter into this agreement and provides other useful information. Please read the conditions, special conditions, and assurances that comprise the Grant Offer carefully.

You may not make any modification to the text, terms or conditions of the Grant Offer.

***Steps You Must Take to Enter Into Agreement*.**

To properly enter into this agreement, you must do the following:

1. The governing body must give authority to execute the grant to the individual(s) signing the grant, i.e., the person signing the document must be the sponsor's authorized representative(s) (hereinafter "authorized representative").
2. The authorized representative must execute the grant by adding their electronic signature to the appropriate certificate at the end of the agreement.
3. Once the authorized representative has electronically signed the grant, the sponsor's attorney(s) will automatically receive an email notification.
4. On the **same day or after** the authorized representative has signed the grant, the sponsor's attorney(s) will add their electronic signature to the appropriate certificate at the end of the agreement.
5. If there are co-sponsors, the authorized representative(s) and sponsor's attorney(s) must follow the above procedures to fully execute the grant and finalize the process. Signatures must be obtained and finalized no later than **September 17, 2026**.
6. The fully executed grant will then be automatically sent to all parties as an email attachment.

Payment. Subject to the requirements in 2 CFR § 200.305 (federal payment), each payment request for reimbursement under this grant must be made electronically via the Delphi eInvoicing System. Please see the attached Grant Agreement for more information regarding the use of this system.

Project Timing. The terms and conditions of this agreement require you to complete the project without undue delay and no later than the Period of Performance end date four (4) years from the grant

execution date). We will be monitoring your progress to ensure proper stewardship of these federal funds. We expect you to submit payment requests for reimbursement of allowable incurred project expenses consistent with project progress. Your grant may be placed in "inactive" status if you do not make draws on a regular basis, which will affect your ability to receive future Grant Offers. Costs incurred after the Period of Performance ends are generally not allowable and will be rejected unless authorized by the FAA in advance.

Reporting. Until the grant is completed and closed, you are responsible for submitting formal reports as follows:

- For all grants, you must submit by December 31st of each year this grant is open:
  1. A signed/dated SF-270 (Request for Advance or Reimbursement for non-construction projects) or SF-271 or equivalent (Outlay Report and Request for Reimbursement for Construction Programs), and
  2. An SF-425 (Federal Financial Report).
- For non-construction projects, you must submit FAA Form 5100-140, Performance Report within 30 days of the end of the federal fiscal year.
- For construction projects, you must submit FAA Form 5370-1, Construction Progress and Inspection Report, within 30 days of the end of each federal fiscal quarter.

Audit Requirements. As a condition of receiving federal assistance under this award, you must comply with audit requirements as established under 2 CFR Part 200. Subpart F requires non-federal entities that expend $1,000,000 or more in federal awards to conduct a single or program specific audit for that year. Note that this includes federal expenditures made under other federal-assistance programs. Please take appropriate and necessary action to ensure your organization will comply with applicable audit requirements and standards.

Closeout. Once the project(s) is completed and all costs are determined, we ask that you work with your FAA contact indicated below to close the project without delay and submit the necessary final closeout documentation as required by your Region/Airports District Office.

FAA Contact Information. Chastity Clark, (407) 487-7226, chastity.clark@faa.gov is the assigned program manager for this grant and is readily available to assist you and your designated representative with the requirements stated herein.

We sincerely value your cooperation in these efforts and look forward to working with you to complete this important project.

Sincerely,

Juan C. Brown (09/03/2026 16:48:41 EDT)

Juan C. Brown
Manager

U.S. Department of Transportation Federal Aviation Administration

FEDERAL AVIATION ADMINISTRATION

FY 2026

FAA CONTRACT TOWER (FCT) PROGRAM GRANT AGREEMENT

Part I - Offer

Federal Award Offer Date	September 3, 2026
Airport/Planning Area	Flagler Executive Airport
Airport Grant Number	3-12-0009-033-2026
Unique Entity Identifier	G2HWL4MXLG69

TO: County of Flagler

(herein called the "Sponsor") (For Co-Sponsors, list all Co-Sponsor names. The word "Sponsor" in this Grant Agreement also applies to a Co-Sponsor.)

FROM: **The United States of America** (acting through the Federal Aviation Administration, herein called the "FAA")

WHEREAS, the sponsor has submitted to the FAA a Project Application dated August 14, 2026, for a grant of federal funds for a project at or associated with the Flagler Exec Airport, which is included as part of this Grant Agreement; and

WHEREAS, the FAA has approved a project for the Flagler Exec Airport (herein called the “Project”) consisting of the following:

Rehabilitate Sponsor Owned Federal Aviation Administration Contract Tower

which is more fully described in the Project Application.

NOW THEREFORE, Pursuant to and for the purpose of carrying out Title 49, United States Code (USC), Chapters 471 and 475; 49 USC §§ 40101 et seq. and 48103; Consolidated Appropriations Act, 2024 (Public Law Number (P.L.) 118-42); Consolidated Appropriations Act, 2025 (P.L. 119-4); Consolidated Appropriations Act, 2026 (P.L. 119-75); FAA Reauthorization Act of 2024 (P.L. 118-63); Infrastructure Investment and Jobs Act of 2021 (IIJA) (P.L. 117-58) (as applicable); and the representations contained in the Project Application; and in consideration of: (a) the sponsor's adoption and ratification of the most recently published Grant Assurances; (b) the sponsor's acceptance of this offer; and (c) the benefits to accrue to the United States and the public from the accomplishment of the project, and compliance with the Grant Assurance and conditions as herein provided;

THE FEDERAL AVIATION ADMINISTRATION, FOR AND ON BEHALF OF THE UNITED STATES, HEREBY OFFERS AND AGREES to pay (100) % of the allowable costs incurred accomplishing the Project as the United States' share of the Project.

Assistance Listings Number(s): 20.117**.**

This Offer is made on and SUBJECT TO THE FOLLOWING TERMS AND CONDITIONS:

CONDITIONS

1. **Maximum Obligation.** The maximum obligation of the United States payable under this Offer is $489,220.

   The following amounts represent a breakdown of the maximum obligation for the purpose of establishing allowable amounts for any future grant amendment, which may increase the foregoing maximum obligation of the United States under the provisions of 49 USC § 47108(b):
   $0 for planning
   $489,220 for airport development or noise program implementation; and,
   $0 for land acquisition.

2. **Grant Performance.** This agreement is subject to the following federal award requirements:

   a. Period of Performance:

      i. Start Date: The date the recipient formally accepts this agreement and the date signed by the last signatory to the agreement.

      ii. End Date: Four (4) years to the calendar day from the date of acceptance.

      iii. Extension of the Period of Performance (PoP): The recipient may request a one-time extension of up to one year after the PoP end date by submitting a request to the FAA. The request must include, at a minimum, supporting justification for the request and the amount of additional time requested. The request must be submitted at least 10 calendar days before the PoP end date. This one-time extension may not be exercised for the sole purpose of using unobligated balances.

      The PoP end date, or any extension as approved by FAA, shall not affect, relieve, or reduce recipient obligations and assurances that extend beyond the closeout of this agreement.

   b. Budget Period:

      i. For a single year grant offer, the budget period follows the same start and end date as the PoP provided in paragraph 2(a), and any extension of the PoP end date.

ii. For a multi-year grant offer, per the authority provided in 49 USC § 47108 and § 47114, the budget period is from the initial PoP start date through the end of the final fiscal year identified on a multi-year grant offer (See Multi-Year Grant Special Condition, if applicable).

c. Appropriation Period of Availability and Expenditure:

i. The FAA must obligate appropriated funds within the period of availability identified in the appropriation.

ii. In accordance with 31 USC § 1552, by September 30th of the fifth fiscal year after the period of availability, FAA must liquidate and close expired appropriations, and any remaining balance (whether obligated or unobligated) must be canceled and thereafter shall not be available for obligation or expenditure for any purpose.

iii. IIJA and Supplemental AIP funding are subject to this condition.

d. Close Out:

Recipients shall begin the closeout process upon physical completion of the project(s) identified in this agreement. Closeout shall proceed expeditiously and without delay, even if the PoP end date has not been reached. In accordance with 2 Code of Federal Regulations (CFR) 200, unless the FAA authorizes a written extension, the recipient must submit all grant closeout documentation and liquidate (pay-off) all obligations incurred under this award no later than 120 calendar days after the PoP end date. If the recipient does not submit all required closeout documentation within this period, the FAA will proceed to close out the grant within one year of the PoP end date with the information available at the end of 120 days.

e. Termination:

The FAA may terminate this agreement and all of its obligations under this agreement if any of the following occur:

i. The recipient fails to comply with the terms and conditions of this agreement;

ii. The recipient fails to obtain or provide any recipient grant contribution as required by the agreement;

iii. There is a material failure to comply with the Project Schedule even if it is beyond the reasonable control of the recipient;

iv. Any project changes that the FAA determines are inconsistent with the FAA's basis for selecting the project to receive a grant;

v. Continued grant payment inactivity, generally defined as no drawdowns over a 12-month period;

vi. The recipient requests that the FAA terminate the agreement under this section; or

vii. The FAA determines that termination of this agreement is in the public interest.

In terminating this agreement under this section, the FAA may elect to consider only the interests of the FAA.

3. <u>Ineligible or Unallowable Costs</u>. In accordance with 49 USC § 47110, the sponsor is prohibited from including any costs in the grant funded portions of the project that the FAA has determined to be ineligible or unallowable, including costs incurred to carry out airport development implementing

policies and initiatives repealed by Executive Order 14148, provided such costs are not otherwise permitted by statute.

4. **Indirect Costs - Sponsor.** The sponsor may charge indirect costs under this award by applying the indirect cost rate identified in the project application, as accepted by the FAA, to allowable costs for sponsor direct salaries and wages.

5. **Determining the Final Federal Share of Costs.** The United States' share of allowable project costs will be made in accordance with 49 USC § 47109, the regulations, policies, and procedures of the Secretary of Transportation ("Secretary"), and any superseding legislation. Final determination of the United States' share will be based upon the final audit of the total amount of allowable project costs, and settlement will be made for any upward or downward adjustments to the federal share of costs.

6. **Completing the Project Without Delay and in Conformance with Requirements.** The sponsor must carry out and complete the project without undue delay, and in accordance with this agreement, 49 USC Chapters 471 and 475, IIJA (P.L. 117-58) (as appropriate), and the regulations, policies, and procedures of the Secretary. Per 2 CFR § 200.308, the sponsor agrees to report and request prior FAA approval for any disengagement from performing the project that exceeds three months, or a 25 percent reduction in time devoted to the project. The report must include a reason for the project stoppage. The sponsor also agrees to comply with the grant assurances, which are part of this agreement.

7. **Amendments or Withdrawals before Grant Acceptance.** The FAA reserves the right to amend or withdraw this offer at any time prior to its acceptance by the sponsor.

8. **Offer Expiration Date.** This offer will expire and the United States will not be obligated to pay any part of the costs of the project(s) unless this offer has been accepted by the sponsor on or before September 17, 2026, or such subsequent date as may be prescribed in writing by the FAA.

9. **Improper Use of Federal Funds and Mandatory Disclosure.**

    a. The sponsor must take all steps, including litigation, if necessary, to recover federal funds spent fraudulently, wastefully, or in violation of federal antitrust statutes, or misused in any other manner for any project upon which federal funds have been expended. For the purposes of this grant agreement, the term "federal funds" means funds however used or dispersed by the sponsor, that were originally paid pursuant to this or any other federal grant agreement. The sponsor must obtain the approval of the Secretary as to any determination of the amount of the federal share of such funds. The sponsor must return the recovered federal share, including funds recovered by settlement, order, or judgment, to the Secretary. Upon request, the sponsor must furnish to the Secretary all documents and records pertaining to the determination of the amount of the federal share, or to any settlement, litigation, negotiation, or other efforts taken to recover such funds. All settlements or other final positions of the sponsor, in court or otherwise, involving the recovery of such federal share require advance approval by the Secretary.

    b. The sponsor, a recipient, and a subrecipient under this federal grant must promptly comply with the mandatory disclosure requirements as established under 2 CFR § 200.113, including reporting requirements related to recipient integrity and performance in accordance with Appendix XII to 2 CFR Part 200.

10. **United States Not Liable for Damage or Injury.** The United States is not responsible or liable for damage to property or injury to persons which may arise from, or be incident to, compliance with this agreement.

11. **System for Award Management (SAM) Registration and Unique Entity Identifier (UEI).**

    a. Requirement for System for Award Management (SAM): Unless the sponsor is exempted from this requirement under 2 CFR § 25.110, the sponsor must maintain the currency of its information in the SAM until the sponsor submits the final financial report required under this grant, or receives the final payment, whichever is later. This requires that the sponsor review and update the information at least annually after the initial registration and more frequently if required by changes in information or another award term. Additional information about registration procedures may be found at the SAM website (currently at http://www.sam.gov).

    b. Unique entity identifier (UEI) means a 12-character alpha-numeric value used to identify a specific commercial, nonprofit, or governmental entity. A UEI may be obtained from SAM.gov at https://sam.gov/content/entity-registration.

12. **Electronic Grant Payment(s).** Unless otherwise directed by the FAA, the sponsor must make each payment request under this agreement electronically via the Delphi eInvoicing System for Department of Transportation (DOT) Financial Assistance Awardees.

13. **Informal Letter Amendment of Projects.** If, during the life of the project, the FAA determines that the maximum grant obligation of the United States exceeds the expected needs of the sponsor by $25,000 or five percent, whichever is greater, the FAA can issue a letter amendment to the sponsor unilaterally reducing the maximum obligation.

    The FAA can also issue a letter to the sponsor increasing the maximum obligation if there is an overrun in the total actual eligible and allowable project costs to cover the amount of the overrun, provided it will not exceed the statutory limitations for grant amendments. The FAA's authority to increase the maximum obligation does not apply to the "planning" component of Condition No. 1, Maximum Obligation.

    The FAA can also issue an informal letter amendment that modifies the grant description to correct administrative errors or to delete work items if the FAA finds it advantageous, and in the best interests of the United States.

    An informal letter amendment has the same force and effect as a formal grant amendment.

14. **Environmental Standards.** The sponsor is required to comply with all applicable environmental standards, as further defined in the Grant Assurances, for all projects in this grant. If the sponsor fails to comply with this requirement, the FAA may suspend, cancel, or terminate this Grant Agreement.

15. **Financial Reporting and Payment Requirements.** The sponsor will comply with all federal financial reporting requirements and payment requirements, including submittal of timely and accurate reports.

16. **Buy American.** Unless otherwise approved in advance by the FAA, in accordance with 49 USC § 50101, the sponsor will not acquire or permit any contractor or subcontractor to acquire any steel or manufactured goods produced outside the United States to be used for any project for which funds are provided under this grant. The sponsor will include a provision implementing Buy American in every contract and subcontract awarded under this grant.

17. **Build America, Buy America.** The sponsor must comply with the requirements under the Build America, Buy America Act (P.L. 117-58).

18. **Maximum Obligation Increase.** In accordance with 49 USC § 47108(b)(2), as amended, the maximum obligation of the United States, as stated in Condition No. 1, Maximum Obligation, of this grant:

    a. May not be increased for a planning project;

    b. May be increased by not more than 15 percent for development projects, if funds are available;

    c. May be increased by not more than the greater of the following for a land project, if funds are available:

        i. 15 percent; or

        ii. 25 percent of the total increase in allowable project costs attributable to acquiring an interest in the land.

    If the sponsor requests an increase, any eligible increase in funding will be subject to the United States Government share as provided in 49 USC § 47109, or IIJA (P.L. 17-58), or other superseding legislation if applicable, for the fiscal year appropriation with which the increase is funded. The FAA is not responsible for the same federal share provided herein for any amount increased over the initial grant amount. The FAA may adjust the federal share as applicable through an informal letter of amendment.

19. **Audits for Sponsors.**

    PUBLIC SPONSORS. The sponsor must provide for a Single Audit or program-specific audit in accordance with 2 CFR Part 200. The sponsor must submit the audit reporting package to the Federal Audit Clearinghouse on the Federal Audit Clearinghouse's Internet Data Entry System at http://harvester.census.gov/facweb/. Upon request of the FAA, the sponsor shall provide one copy of the completed audit to the FAA. Sponsors that expend less than $1,000,000 in federal awards and are exempt from federal audit requirements must make records available for review or audit by the appropriate federal agency officials, state, and Government Accountability Office. The FAA and other appropriate federal agencies may request additional information to meet all federal audit requirements.

20. **Suspension or Debarment.** When entering into a "covered transaction" as defined by 2 CFR § 180.200, the sponsor must:

    a. Verify the non-federal entity is eligible to participate in this federal program by:

        i. Checking the System for Award Management (SAM.gov) exclusions to determine if the non-federal entity is excluded or disqualified; or

        ii. Collecting a certification statement from the non-federal entity attesting they are not excluded or disqualified from participating; or

        iii. Adding a clause or condition to covered transactions attesting the individual or firm are not excluded or disqualified from participating.

    b. Require prime contractors to comply with 2 CFR § 180.330 when entering into lower-tier transactions with their contractors and sub-contractors.

c. Immediately disclose in writing to the FAA whenever (1) the sponsor learns they have entered into a covered transaction with an ineligible entity or (2) the public sponsor suspends or debars a contractor, person, or entity.

21. Ban on Texting While Driving.

a. In accordance with Executive Order 13513, Federal Leadership on Reducing Text Messaging While Driving, October 1, 2009, and DOT Order 3902.10, Text Messaging While Driving, December 30, 2009, the sponsor is encouraged to:

i. Adopt and enforce workplace safety policies to decrease crashes caused by distracted drivers, including policies to ban text messaging while driving when performing any work for, or on behalf of, the Federal Government, including work relating to a grant or subgrant.

ii. Conduct workplace safety initiatives in a manner commensurate with the size of the business, such as:

a) Establishment of new rules and programs or re-evaluation of existing programs to prohibit text messaging while driving; and
b) Education, awareness, and other outreach to employees about the safety risks associated with texting while driving.

f. The sponsor must insert the substance of this clause on banning texting while driving in all subgrants, contracts, and subcontracts funded with this grant.

22. Trafficking in Persons.

a. *Posting of contact information.*

i. The sponsor must post the contact information of the national human trafficking hotline (including options to reach out to the hotline such as through phone, text, or TTY) in all public airport restrooms.

b. *Provisions applicable to a sponsor that is a private entity.*

i. Under this grant, the sponsor, its employees, subrecipients under this grant, and subrecipient's employees must not engage in:

a) Severe forms of trafficking in persons;

b) The procurement of a commercial sex act during the period of time that the grant or cooperative agreement is in effect;

c) The use of forced labor in the performance of this grant; or any subaward; or

d) Acts that directly support or advance trafficking in persons, including the following acts:

1. Destroying, concealing, removing, confiscating, or otherwise denying an employee access to that employee's identity or immigration documents;

2. Failing to provide return transportation of pay for return transportation costs to an employee from a country outside the United States to the country from which the employee was recruited upon the end of employment if requested by the employee, unless:

a. Exempted from the requirement to provide or pay for such return transportation by the federal department or agency providing or entering into the grant; or

b. The employee is a victim of human trafficking seeking victim services or legal redress in the country of employment or witness in a human trafficking enforcement action;

3. Soliciting a person for the purpose of employment, or offering employment, by means of materially false or fraudulent pretenses, representations, or promises regarding that employment;

4. Charging recruited employees a placement or recruitment fee; or

5. Providing or arranging housing that fails to meet the host country's housing and safety standards.

ii. The FAA may unilaterally terminate this grant or take any remedial actions authorized by 22 USC § 7104b(c), without penalty, if any private entity under this grant:

a) is determined to have violated a prohibition in paragraph 2.a. (PoP) of this grant; or

b) has an employee that is determined to have violated a prohibition in paragraph 2.a. (PoP) of this grant through conduct that is either:

1. Associated with the performance under this grant; or
2. Imputed to the recipient or the subrecipient using the standards and due process for imputing the conduct of an individual to an organization that are provided in 2 CFR Part 180, "OMB Guidelines to Agencies on Government-wide Debarment and Suspension (Nonprocurement)," as implemented by the FAA at 2 CFR Part 1200.

c. *Provisions applicable to a sponsor other than a private entity.*

i. The FAA may unilaterally terminate this award or take any remedial actions authorized by 22 USC § 7104b(c), without penalty, if subrecipient is a private entity under this grant:

a) is determined to have violated a prohibition in paragraph 2.a. (PoP) of this grant or

b) has an employee that is determined to have violated a prohibition in paragraph 2.a. (PoP) of this grant through conduct that is either:

1. Associated with the performance under this grant; or

2. Imputed to the sponsor or subrecipient using the standards and due process for imputing the conduct of an individual to an organization that are provided in 2 CFR Part 180, "OMB Guidelines to Agencies on Government-wide Debarment and Suspension (Nonprocurement)," as implemented by the FAA at 2 CFR Part 1200.

d. Provisions applicable to any sponsor or subrecipient.

i. The sponsor or subrecipient must inform the FAA and the DOT Inspector General immediately of any information you receive from any source alleging a violation of a prohibition in paragraph 2.a. (PoP) of this grant.

ii. The FAA's right to unilaterally terminate this grant as described in paragraphs 2.b. (Budget Period) or 3.a. (Close Out and Termination) of this grant, implements the requirements of 22 USC Chapter 78, and is in addition to all other remedies for noncompliance that are available to the FAA under this grant.

iii. The sponsor must include the requirements of paragraph 2.a. (PoP) of this grant award term in any subaward it makes to a private entity.

iv. If applicable, the sponsor must also comply with the compliance plan and certification requirements in 2 CFR § 175.105(b).

e. *Definitions. For purposes of this grant award, term:*

i. "Employee" means either:

a) An individual employed by the sponsor or a subrecipient who is engaged in the performance of the project or program under this grant; or

b) Another person engaged in the performance of the project or program under this grant and not compensated by the sponsor or a subrecipient including, but not limited to, a volunteer or individual whose services are contributed by a third party as an in-kind contribution toward cost sharing requirements.

ii. "Private Entity" means:

a) Any entity, including for-profit organizations, nonprofit organizations, institutions of higher education, and hospitals. The term does not include foreign public entities, Indian Tribes, local governments, or states as defined in 2 CFR § 200.1.

b) The terms "severe forms of trafficking in persons," "commercial sex act," "sex trafficking," "abuse or threatened abuse of law or legal process," "coercion," "debt bondage," and "involuntary servitude" have the meanings given at section 103 of the Victims of Trafficking and Violence Protection Act of 2000, as amended (22 USC § 7102).

23. Grant Funded Work Included in a PFC Application. Within 120 days of acceptance of this Grant Agreement, the sponsor must submit to the FAA an amendment to any approved Passenger Facility Charge (PFC) application that contains an approved PFC project also covered under this Grant Agreement as described in the project application. The sponsor may not make any expenditure under this Grant Agreement until project work addressed under this Grant Agreement is removed from an approved PFC application by amendment.

24. Exhibit "A" Property Map. The Exhibit "A" Property Map dated November, 2015, is incorporated herein by reference, or is submitted with the project application and made part of this Grant Agreement.

25. Employee Protection from Reprisal. In accordance with 2 CFR § 200.217 and 41 USC § 4701, an employee of a grantee, subgrantee contractor, recipient, or subrecipient must not be discharged, demoted, or otherwise discriminated against as a reprisal for disclosing to a person or body described in 41 USC § 4712(a)(2) information that the employee reasonably believes is evidence of gross mismanagement of a federal contract or grant, a gross waste of federal funds, an abuse of authority relating to a federal contract or grant, a substantial and specific danger to public health or safety, or a violation of law, rule, or regulation related to a federal contract (including the competition for or negotiation of a contract) or grant. The grantee, subgrantee, contractor, recipient, or subrecipient must inform their employees in writing of employee whistleblower rights and protections under 41 USC § 4712. See statutory requirements for whistleblower protections at 10 USC § 4701, 41 USC § 4712, 41 USC § 4304, and 10 USC § 4310.

26. Prohibited Telecommunications and Video Surveillance Services and Equipment. The sponsor agrees to comply with mandatory standards and policies relating to use and procurement of certain telecommunications and video surveillance services or equipment in compliance with the National Defense Authorization Act [P.L. 115-232 § 889] and 2 CFR § 200.216.

27. Critical Infrastructure Security and Resilience. The sponsor acknowledges that it has considered and addressed physical and cybersecurity and resilience in its project planning, design, and oversight, as determined by the DOT and the Department of Homeland Security (DHS). For airports that do not have specific DOT or DHS cybersecurity requirements, the FAA encourages the voluntary adoption of the cybersecurity requirements from the Transportation Security Administration and Federal Security Director identified for security risk Category X airports.

28. Title VI of the Civil Rights Act. As a condition of a grant award, the sponsor shall demonstrate that it complies with the provisions of Title VI of the Civil Rights Act of 1964 (42 USC §§ 2000d et seq.) and implementing regulations (49 CFR Part 21), the Airport and Airway Improvement Act of 1982 (49 USC § 47123), the Age Discrimination Act of 1975 (42 USC § 6101 et seq.), Section 504 of the Rehabilitation Act of 1973 (29 USC § 794 et seq.), the Americans with Disabilities Act of 1990 (42 USC § 12101, et seq.), U.S. Department of Transportation and Federal Aviation Administration (FAA) Assurances, and other relevant civil rights statutes, regulations, or authorities, including any amendments or updates thereto. This may include, as applicable, providing a current Title VI Program Plan to the FAA for approval, in the format and according to the timeline required by the FAA, and other information about the communities that will be benefited and impacted by the project. The sponsor shall affirmatively ensure that when carrying out any project supported by this grant that it complies with all federal nondiscrimination and civil rights laws based on race, color, national origin, sex, creed, age, disability, and genetic information, in consideration for federal financial assistance. The Department's and FAA's Office of Civil Rights may provide resources and technical assistance to recipients to ensure full and sustainable compliance with federal civil rights requirements. Failure to comply with civil rights requirements will be considered a violation of the agreement or contract and be subject to any enforcement action as authorized by law.

29. Applicable Federal Anti-Discrimination Laws. The sponsor agrees:

a. That its compliance in all respects with all applicable federal anti-discrimination laws is material to the government's payment decisions for purposes of 31 USC § 3729(b)(4) and

b. To certify that it does not operate any programs promoting Diversity, Equity, and Inclusion (DEI) that violate any applicable federal anti-discrimination laws.

30. National Airspace System Requirements.

a. The sponsor shall cooperate with FAA activities installing, maintaining, replacing, improving, or operating equipment and facilities in or supporting the National Airspace System, including waiving permitting requirements and other restrictions affecting those activities to the maximum extent possible, and assisting the FAA in securing waivers of permitting or other restrictions from other authorities. The sponsor shall not take actions that frustrate or prevent the FAA from installing, maintaining, replacing, improving, or operating equipment and facilities in or supporting the National Airspace System.

b. If FAA determines that the sponsor has violated subsection a., the FAA may impose a remedy, including:

    i. Additional conditions on the award;

ii. Consistent with 49 USC Chapter 471, any remedy permitted under 2 CFR §§ 200.339–200.340, including withholding of payments; disallowance of previously reimbursed costs, requiring refunds from the recipient to the DOT; suspension or termination of the award; or suspension and debarment under 2 CFR part 180; or

iii. Any other remedy legally available.

c. In imposing a remedy under this condition, the FAA may elect to consider the interests of only the FAA.

d. The sponsor acknowledges that amounts that the FAA requires the sponsor to refund to the FAA due to a remedy under this condition constitute a debt to the Federal Government that the FAA may collect under 2 CFR 200.346 and the Federal Claims Collection Standards (31 CFR Parts 900–904).

31. Signage Costs for Construction Projects. The sponsor agrees that it will require the prime contractor of a federally-assisted airport improvement project to post signs consistent with a DOT/FAA-prescribed format, as may be requested by the DOT/FAA, and further agrees to remove any signs posted in response to requests received prior to February 1, 2025.

The sponsor's acceptance of this offer and ratificaton and adoption of the Project Application incorporated herein shall be evidenced by execution of this instrument by the sponsor, as hereinafter provided, and this offer and acceptance shall comprise a Grant Agreement, constituting the contractual obligations and rights of the United States and the sponsor with respect to the accomplishment of the project and compliance with the Grant Assurances, terms, and conditions as provided herein. Such Grant Agreement shall become effective upon the sponsor's acceptance of this offer.

Please read the following information: By signing this document, you are agreeing that you have reviewed the following consumer disclosure information and consent to transact business using electronic communications, to receive notices and disclosures electronically, and to utilize electronic signatures in lieu of using paper documents. You are not required to receive notices and disclosures or sign documents electronically. If you prefer not to do so, you may request to receive paper copies and withdraw your consent at any time.

I declare under penalty of perjury that the foregoing is true and correct.[1]

UNITED STATES OF AMERICA
FEDERAL AVIATION ADMINISTRATION

Juan C. Brown (09/03/2026 16:48:41 EDT)

(Signature)

Juan C. Brown

(Typed Name)

Manager

(Title of FAA Official)

[1] Knowingly and willfully providing false information to the Federal government is a violation of 18 U.S.C. § 1001 (False Statements) and could subject you to fines, imprisonment, or both.

Part II - Acceptance

The sponsor does hereby ratify and adopt all assurances, statements, representations, warranties, covenants, and agreements contained in the Project Application and incorporated materials referred to in the foregoing offer, and does hereby accept this offer and by such acceptance agrees to comply with all of the Grant Assurances, terms, and conditions in this offer and in the Project Application.

Please read the following information: By signing this document, you are agreeing that you have reviewed the following consumer disclosure information and consent to transact business using electronic communications, to receive notices and disclosures electronically, and to utilize electronic signatures in lieu of using paper documents. You are not required to receive notices and disclosures or sign documents electronically. If you prefer not to do so, you may request to receive paper copies and withdraw your consent at any time.

I declare under penalty of perjury that the foregoing is true and correct.[2]

Dated September 9, 2026

County of Flagler

(Name of Sponsor)

leann pennington

leann pennington (09/09/2026 10:39:54 EDT)

(Signature of Sponsor's Authorized Official)

By: leann pennington

(Typed Name of Sponsor's Authorized Official)

Title: Chair, County Commission

(Title of Sponsor's Authorized Official)

[2] Knowingly and willfully providing false information to the Federal Government is a violation of 18 USC § 1001 (False Statements) and could subject you to fines, imprisonment, or both.

CERTIFICATE OF SPONSOR'S ATTORNEY

I, Sean S. Moylan , acting as Attorney for the Sponsor do hereby certify:

That in my opinion the Sponsor is empowered to enter into the foregoing Grant Agreement under the laws of the State of Florida. Further, I have examined the foregoing Grant Agreement and the actions taken by said Sponsor and Sponsor's official representative, who has been duly authorized to execute this Grant Agreement, which is in all respects due and proper and in accordance with the laws of the said State; and Title 49, United States Code (USC), Chapters 471 and 475; 49 USC §§ 40101 et seq., and 48103; Consolidated Appropriations Act, 2024 (P.L. 118-42); Consolidated Appropriations Act, 2025 (P.L. 119-4); Consolidated Appropriations Act, 2026 (P.L. 119-75); FAA Reauthorization Act of 2024 (P.L. 118-63); and the representations contained in the Project Application. In addition, for grants involving projects to be carried out on property not owned by the Sponsor, there are no legal impediments that will prevent full performance by the Sponsor. Further, it is my opinion that the said Grant Agreement constitutes a legal and binding obligation of the Sponsor in accordance with the terms thereof.

Please read the following information: By signing this document, you are agreeing that you have reviewed the following consumer disclosure information and consent to transact business using electronic communications, to receive notices and disclosures electronically, and to utilize electronic signatures in lieu of using paper documents. You are not required to receive notices and disclosures or sign documents electronically. If you prefer not to do so, you may request to receive paper copies and withdraw your consent at any time.

I declare under penalty of perjury that the foregoing is true and correct.[3]

Dated at September 9, 2026

By: Sean S. Moylan
Sean S. Moylan (09/09/2026 10:51:25 EDT)
(Signature of Sponsor's Attorney)

[3] Knowingly and willfully providing false information to the Federal Government is a violation of 18 USC § 1001 (False Statements) and could subject you to fines, imprisonment, or both.

ASSURANCES
AIRPORT SPONSORS

A. General.

1. These assurances shall be complied with in the performance of grant agreements for airport development, airport planning, and noise compatibility program grants for airport sponsors.
2. These assurances are required to be submitted as part of the project application by sponsors requesting funds under the provisions of Title 49, USC, subtitle VII, as amended. As used herein, the term "public agency sponsor" means a public agency with control of a public-use airport; the term "private sponsor" means a private owner of a public-use airport; and the term "sponsor" includes both public agency sponsors and private sponsors.
3. Upon acceptance of this Grant Offer by the sponsor, these assurances are incorporated in and become part of this Grant Agreement.

B. Duration and Applicability.

1. Airport Development or Noise Compatibility Program Projects Undertaken by a Public Agency Sponsor.

The terms, conditions and assurances of this Grant Agreement shall remain in full force and effect throughout the useful life of the facilities developed or equipment acquired for an airport development or noise compatibility program project, or throughout the useful life of the project items installed within a facility under a noise compatibility program project, but in any event not to exceed twenty (20) years from the date of acceptance of a Grant Offer of federal funds for the project. However, there shall be no limit on the duration of the assurances regarding Exclusive Rights and Airport Revenue so long as the airport is used as an airport. There shall be no limit on the duration of the terms, conditions, and assurances with respect to real property acquired with federal funds. Furthermore, the duration of the Civil Rights assurance shall be specified in the assurances.

2. **Airport Development or Noise Compatibility Projects Undertaken by a Private Sponsor.**

The preceding paragraph (1) also applies to a private sponsor except that the useful life of project items installed within a facility or the useful life of the facilities developed or equipment acquired under an airport development or noise compatibility program project shall be no less than ten (10) years from the date of acceptance of federal aid for the project.

3. **Airport Planning Undertaken by a Sponsor.**

Unless otherwise specified in this Grant Agreement, only Assurances 1, 2, 3, 5, 6, 13, 18, 23, 25, 30, 32, 33, 34, 37, and 40 in Section C apply to planning projects. The terms, conditions, and assurances of this Grant Agreement shall remain in full force and effect during the life of the project; there shall be no limit on the duration of the assurances regarding Exclusive Rights and Airport Revenue so long as the airport is used as an airport.

C. Sponsor Certification.

The sponsor hereby assures and certifies, with respect to this grant that:

1. General Federal Requirements

It will comply with all applicable federal laws, regulations, executive orders, policies, guidelines, and requirements as they relate to the application, acceptance, and use of federal funds for this grant. Performance under this agreement shall be governed by and in compliance with the following requirements, as applicable, to the type of organization of the Sponsor and any applicable sub-recipients. The applicable provisions to this agreement include, but are not limited to, the following:

FEDERAL LEGISLATION

a. 49 USC subtitle VII, as amended.
b. Davis-Bacon Act, as amended — 40 USC §§ 3141-3144, 3146, and 3147, et seq.[1]
c. Federal Fair Labor Standards Act – 29 USC § 201, et seq.
d. Hatch Act – 5 USC § 1501, et seq.[2]
e. Uniform Relocation Assistance and Real Property Acquisition Policies Act of 1970, 42 USC § 4601, et seq.[1, 2]
f. National Historic Preservation Act of 1966 – Section 106 – 54 USC § 306108.[1]
g. Archeological and Historic Preservation Act of 1974 – 54 USC § 312501, et seq.[1]
h. Native Americans Grave Repatriation Act – 25 USC § 3001, et seq.
i. Clean Air Act, P.L. 90-148, as amended – 42 USC § 7401, et seq.
j. Coastal Zone Management Act, P.L. 92-583, as amended – 16 USC § 1451, et seq.
k. Flood Disaster Protection Act of 1973 – Section 102(a) - 42 USC § 4012a.[1]
l. 49 USC § 303, (formerly known as Section 4(f)).
m. Rehabilitation Act of 1973 – 29 USC § 794.
n. Title VI of the Civil Rights Act of 1964 (42 USC § 2000d et seq.) (prohibits discrimination on the basis of race, color, national origin).
o. Americans with Disabilities Act of 1990, as amended, (42 USC § 12101 et seq.) (prohibits discrimination on the basis of disability).
p. Age Discrimination Act of 1975 – 42 USC § 6101, et seq.
q. American Indian Religious Freedom Act, P.L. 95-341, as amended.
r. Architectural Barriers Act of 1968, as amended – 42 USC § 4151, et seq.[1]
s. Powerplant and Industrial Fuel Use Act of 1978 – Section 403 – 42 USC § 8373.[1]
t. Contract Work Hours and Safety Standards Act – 40 USC § 3701, et seq.[1]
u. Copeland Anti-kickback Act – 18 USC § 874.[1]

v. National Environmental Policy Act of 1969 – 42 USC § 4321, et seq.[1]

w. Wild and Scenic Rivers Act, P.L. 90-542, as amended – 16 USC § 1271, et seq.

x. Single Audit Act of 1984 – 31 USC § 7501, et seq.[2]

y. Drug-Free Workplace Act of 1988 – 41 USC §§ 8101 through 8105.

z. The Federal Funding Accountability and Transparency Act of 2006, as amended (P.L. 109-282, as amended by section 6202 of P.L. 110-252).

aa. Civil Rights Restoration Act of 1987, P.L. 100-259.

bb. Infrastructure Investment and Jobs Act, P.L. 117-58, Title VIII.

cc. Build America, Buy America Act, P.L. 117-58, Title IX.

dd. Endangered Species Act – 16 USC 1531, et seq.

ee. Title IX of the Education Amendments of 1972, as amended – 20 USC 1681–1683 and 1685–1687.

ff. Drug Abuse Office and Treatment Act of 1972, as amended – 21 USC 1101, et seq.

gg. Alcohol Abuse and Alcoholism Prevention, Treatment and Rehabilitation Act of 1970, P.L. 91-616, as amended – 42 USC § 4541, et seq.

hh. Alcohol Abuse and Alcoholism Prevention, Treatment and Rehabilitation Act of 1970, P.L. 91-616, as amended – 42 USC § 4541, et seq.

ii. Appropriated Funds to Influence Certain Federal Contracting and Financial Transactions – 31 USC § 1352.

EXECUTIVE ORDERS

a. Executive Order 11990 – Protection of Wetlands

b. Executive Order 11988 – Floodplain Management

c. Executive Order 12372 – Intergovernmental Review of Federal Programs

d. Executive Order 12699 – Seismic Safety of Federal and Federally Assisted New Building Construction[1]

e. Executive Order 14005 – Ensuring the Future is Made in all of America by All of America's Workers

f. Executive Order 14149 – Restoring Freedom of Speech and Ending Federal Censorship

g. Executive Order 14151 – Ending Radical and Wasteful Government DEI Programs and Preferencing

h. Executive Order 14154 – Unleashing American Energy

i. Executive Order 14168 – Defending Women from Gender Ideology Extremism and Restoring Biological Truth to the Federal Government

j. Executive Order 14173 – Ending Illegal Discrimination and Restoring Merit-Based Opportunity

FEDERAL REGULATIONS

a. 2 CFR Part 180 – OMB Guidelines to Agencies on Governmentwide Debarment and Suspension (Nonprocurement).

b. 2 CFR Part 200 and 1201 – Uniform Administrative Requirements, Cost Principles, and Audit Requirements for Federal Awards. [3, 4, 5]

c. 2 CFR Part 1200 – Nonprocurement Suspension and Debarment.

d. 14 CFR Part 13 – Investigative and Enforcement Procedures.

e. 14 CFR Part 16 – Rules of Practice for Federally-Assisted Airport Enforcement Proceedings.

f. 14 CFR Part 150 – Airport Noise Compatibility Planning.

g. 28 CFR Part 35 – Nondiscrimination on the Basis of Disability in State and Local Government Services.

h. 28 CFR § 50.3 – U.S. Department of Justice Guidelines for the Enforcement of Title VI of the Civil Rights Act of 1964.

i. 29 CFR Part 1 – Procedures for Predetermination of Wage Rates.[1]

j. 29 CFR Part 3 – Contractors and Subcontractors on Public Building or Public Work Financed in Whole or in Part by Loans or Grants from the United States.[1]

k. 29 CFR Part 5 – Labor Standards Provisions Applicable to Contracts Covering Federally Financed and Assisted Construction (Also Labor Standards Provisions Applicable to Nonconstruction Contracts Subject to the Contract Work Hours and Safety Standards Act).[1]

l. 41 CFR Part 60 – Office of Federal Contract Compliance Programs, Equal Employment Opportunity, Department of Labor (Federal and Federally-assisted contracting requirements).[1]

m. 49 CFR Part 20 – New Restrictions on Lobbying.

n. 49 CFR Part 21 – Nondiscrimination in Federally-Assisted Programs of the Department of Transportation - Effectuation of Title VI of the Civil Rights Act of 1964.

o. 49 CFR Part 23 – Participation by Disadvantage Business Enterprise in Airport Concessions.

p. 49 CFR Part 24 – Uniform Relocation Assistance and Real Property Acquisition for Federal and Federally-Assisted Programs.[1, 2]

q. 49 CFR Part 26 – Participation by Disadvantaged Business Enterprises in Department of Transportation Financial Assistance Programs.

r. 49 CFR Part 27 – Nondiscrimination on the Basis of Disability in Programs or Activities Receiving Federal Financial Assistance.[1]

s. 49 CFR Part 28 – Enforcement of Nondiscrimination on the Basis of Handicap in Programs or Activities Conducted by the Department of Transportation.

t. 49 CFR Part 30 – Denial of Public Works Contracts to Suppliers of Goods and Services of Countries That Deny Procurement Market Access to U.S. Contractors.

u. 49 CFR Part 32 – Governmentwide Requirements for Drug-Free Workplace (Financial Assistance).

v. 49 CFR Part 37 – Transportation Services for Individuals with Disabilities (ADA).

w. 49 CFR Part 38 – Americans with Disabilities Act (ADA) Accessibility Specifications for Transportation Vehicles.

x. 49 CFR Part 41 – Seismic Safety.

FOOTNOTES TO ASSURANCE (C)(1)

[1] These laws do not apply to airport planning sponsors.
[2] These laws do not apply to private sponsors.
[3] 2 CFR Part 200 contains requirements for state and local governments receiving federal assistance. Any requirement levied upon state and local governments by this regulation shall apply where applicable to private sponsors receiving federal assistance under Title 49, United States Code.
[4] Cost principles established in 2 CFR Part 200 subpart E must be used as guidelines for determining the eligibility of specific types of expenses.
[5] Audit requirements established in 2 CFR Part 200 subpart F are the guidelines for audits.

SPECIFIC ASSURANCES

Specific assurances required to be included in grant agreements by any of the above laws, regulations or circulars are incorporated by reference in this Grant Agreement.

2. Responsibility and Authority of the Sponsor.

a. Public Agency Sponsor:

It has legal authority to apply for this grant, and to finance and carry out the proposed project; that a resolution, motion or similar action has been duly adopted or passed as an official act of the applicant's governing body authorizing the filing of the application, including all understandings and assurances contained therein, and directing and authorizing the person identified as the official representative of the applicant to act in connection with the application and to provide such additional information as may be required.

b. Private Sponsor:

It has legal authority to apply for this grant and to finance and carry out the proposed project and comply with all terms, conditions, and assurances of this Grant Agreement. It shall designate an official representative and shall in writing direct and authorize that person to file this application, including all understandings and assurances contained therein; to act in connection with this application; and to provide such additional information as may be required.

3. Sponsor Fund Availability.

It has sufficient funds available for that portion of the project costs which are not to be paid by the United States. It has sufficient funds available to assure operation and maintenance of items funded under this Grant Agreement which it will own or control.

4. Good Title.

a. It, a public agency or the Federal Government, holds good title, satisfactory to the Secretary, to the landing area of the airport or site thereof, or will give assurance satisfactory to the Secretary that good title will be acquired.

b. For noise compatibility program projects to be carried out on the property of the sponsor, it holds good title satisfactory to the Secretary to that portion of the property upon which federal funds will be expended or will give assurance to the Secretary that good title will be obtained.

5. Preserving Rights and Powers.

a. It will not take or permit any action which would operate to deprive it of any of the rights and powers necessary to perform any or all of the terms, conditions, and assurances in this Grant Agreement without the written approval of the Secretary, and will act promptly to acquire, extinguish or modify any outstanding rights or claims of right of others which would interfere with such performance by the sponsor. This shall be done in a manner acceptable to the Secretary.

b. Subject to 49 USC § 47107(a)(16) and (x), it will not sell, lease, encumber, or otherwise transfer or dispose of any part of its title or other interests in the property shown on Exhibit A to this application or, for a noise compatibility program project, that portion of the property upon which federal funds have been expended, for the duration of the terms, conditions, and assurances in this Grant Agreement without approval by the Secretary. If the transferee is found by the Secretary to be eligible under Title 49, United States Code, to assume the obligations of this Grant Agreement and to have the power, authority, and financial resources to carry out all such obligations, the sponsor shall insert in the contract or document transferring or disposing of the sponsor's interest, and make binding upon the transferee all of the terms, conditions, and assurances contained in this Grant Agreement.

c. For all noise compatibility program projects which are to be carried out by another unit of local government or are on property owned by a unit of local government other than the sponsor, it will enter into an agreement with that government. Except as otherwise specified by the Secretary, that agreement shall obligate that government to the same terms, conditions, and assurances that would be applicable to it if it applied directly to the FAA for a grant to undertake the noise compatibility program project. That agreement and changes thereto must be satisfactory to the Secretary. It will take steps to enforce this agreement against the local government if there is substantial non-compliance with the terms of the agreement.

d. For noise compatibility program projects to be carried out on privately owned property, it will enter into an agreement with the owner of that property which includes provisions specified by the Secretary. It will take steps to enforce this agreement against the property owner whenever there is substantial non-compliance with the terms of the agreement.

e. If the sponsor is a private sponsor, it will take steps satisfactory to the Secretary to ensure that the airport will continue to function as a public-use airport in accordance with these assurances for the duration of these assurances.

f. If an arrangement is made for management and operation of the airport by any agency or person other than the sponsor or an employee of the sponsor, the sponsor will reserve sufficient rights and authority to ensure that the airport will be operated and maintained in accordance with Title 49, United States Code, the regulations and the terms, conditions and assurances in this Grant Agreement and shall ensure that such arrangement also requires compliance therewith.

g. Sponsors of commercial service airports will not permit or enter into any arrangement that results in permission for the owner or tenant of a property used as a residence, or zoned for residential use, to taxi an aircraft between that property and any location on airport. Sponsors

of general aviation airports entering into any arrangement that results in permission for the owner of residential real property adjacent to or near the airport must comply with the requirements of Sec. 136 of Public Law 112-95 and the sponsor assurances.

6. Consistency with Local Plans.

The project is reasonably consistent with plans (existing at the time of submission of this application) of public agencies that are authorized by the state in which the project is located to plan for the development of the area surrounding the airport.

7. Consideration of Local Interest.

It has given fair consideration to the interest of communities in or near where the project may be located.

8. Consultation with Users.

In making a decision to undertake any airport development project under Title 49, United States Code, it has undertaken reasonable consultations with affected parties using the airport at which project is proposed.

9. Public Hearings.

In projects involving the location of an airport, an airport runway, or a major runway extension, it has afforded the opportunity for public hearings for the purpose of considering the economic, social, and environmental effects of the airport or runway location and its consistency with goals and objectives of such planning as has been carried out by the community and it shall, when requested by the Secretary, submit a copy of the transcript of such hearings to the Secretary. Further, for such projects, it has on its management board either voting representation from the communities where the project is located or has advised the communities that they have the right to petition the Secretary concerning a proposed project.

10. Metropolitan Planning Organization.

In projects involving the location of an airport, an airport runway, or a major runway extension at a medium or large hub airport, the sponsor has made available to and has provided upon request to the metropolitan planning organization in the area in which the airport is located, if any, a copy of the proposed amendment to the airport layout plan to depict the project and a copy of any airport master plan in which the project is described or depicted.

11. Pavement Preventive Maintenance-Management.

With respect to a project approved after January 1, 1995, for the replacement or reconstruction of pavement at the airport, it assures or certifies that it has implemented an effective airport pavement maintenance-management program and it assures that it will use such program for the useful life of any pavement constructed, reconstructed or repaired with federal financial assistance at the airport. It will provide such reports on pavement condition and pavement management programs as the Secretary determines may be useful.

12. Terminal Development Prerequisites.

For projects which include terminal development at a public use airport, as defined in Title 49, it has, on the date of submittal of the project grant application, all the safety equipment required for certification of such airport under 49 USC § 44706, and all the security equipment required by rule or regulation, and has provided for access to the passenger enplaning and deplaning area of such airport to passengers enplaning and deplaning from aircraft other than air carrier aircraft.

13. Accounting System, Audit, and Record Keeping Requirements.

a. It shall keep all project accounts and records which fully disclose the amount and disposition by the recipient of the proceeds of this grant, the total cost of the project in connection with which this grant is given or used, and the amount or nature of that portion of the cost of the project supplied by other sources, and such other financial records pertinent to the project. The accounts and records shall be kept in accordance with an accounting system that will facilitate an effective audit in accordance with the Single Audit Act of 1984.

b. It shall make available to the Secretary and the Comptroller General of the United States, or any of their duly authorized representatives, for the purpose of audit and examination, any books, documents, papers, and records of the recipient that are pertinent to this grant. The Secretary may require that an appropriate audit be conducted by a recipient. In any case in which an independent audit is made of the accounts of a sponsor relating to the disposition of the proceeds of a grant or relating to the project in connection with which this grant was given or used, it shall file a certified copy of such audit with the Comptroller General of the United States not later than six (6) months following the close of the fiscal year for which the audit was made.

14. Minimum Wage Rates.

It shall include, in all contracts in excess of $2,000 for work on any projects funded under this Grant Agreement which involve labor, provisions establishing minimum rates of wages, to be predetermined by the Secretary of Labor under 40 USC §§ 3141-3144, 3146, and 3147, Public Building, Property, and Works), which contractors shall pay to skilled and unskilled labor, and such minimum rates shall be stated in the invitation for bids and shall be included in proposals or bids for the work.

15. Veteran's Preference.

It shall include in all contracts for work on any project funded under this Grant Agreement which involve labor, such provisions as are necessary to insure that, in the employment of labor (except in executive, administrative, and supervisory positions), preference shall be given to Vietnam era veterans, Persian Gulf veterans, Afghanistan-Iraq war veterans, disabled veterans, and small business concerns owned and controlled by disabled veterans as defined in 49 USC § 47112. However, this preference shall apply only where the individuals are available and qualified to perform the work to which the employment relates.

16. Conformity to Plans and Specifications.

It will execute the project subject to plans, specifications, and schedules approved by the Secretary. Such plans, specifications, and schedules shall be submitted to the Secretary prior to commencement of site preparation, construction, or other performance under this Grant Agreement, and, upon approval of the Secretary, shall be incorporated into this Grant Agreement. Any modification to the approved plans, specifications, and schedules shall also be subject to approval of the Secretary, and incorporated into this Grant Agreement.

17. Construction Inspection and Approval.

It will provide and maintain competent technical supervision at the construction site throughout the project to assure that the work conforms to the plans, specifications, and schedules approved by the Secretary for the project. It shall subject the construction work on any project contained in an approved project application to inspection and approval by the Secretary and such work shall be in

accordance with regulations and procedures prescribed by the Secretary. Such regulations and procedures shall require such cost and progress reporting by the sponsor or sponsors of such project as the Secretary shall deem necessary.

18. Planning Projects.

In carrying out planning projects:

a. It will execute the project in accordance with the approved program narrative contained in the project application or with the modifications similarly approved.

b. It will furnish the Secretary with such periodic reports as required pertaining to the planning project and planning work activities.

c. It will include in all published material prepared in connection with the planning project a notice that the material was prepared under a grant provided by the United States.

d. It will make such material available for examination by the public, and agrees that no material prepared with funds under this project shall be subject to copyright in the United States or any other country.

e. It will give the Secretary unrestricted authority to publish, disclose, distribute, and otherwise use any of the material prepared in connection with this grant.

f. It will grant the Secretary the right to disapprove the sponsor's employment of specific consultants and their subcontractors to do all or any part of this project as well as the right to disapprove the proposed scope and cost of professional services.

g. It will grant the Secretary the right to disapprove the use of the sponsor's employees to do all or any part of the project.

h. It understands and agrees that the Secretary's approval of this project grant or the Secretary's approval of any planning material developed as part of this grant does not constitute or imply any assurance or commitment on the part of the Secretary to approve any pending or future application for a federal airport grant.

19. Operation and Maintenance.

a. The airport and all facilities which are necessary to serve the aeronautical users of the airport, other than facilities owned or controlled by the United States, shall be operated at all times in a safe and serviceable condition and in accordance with the minimum standards as may be required or prescribed by applicable Federal, state, and local agencies for maintenance and operation. It will not cause or permit any activity or action thereon which would interfere with its use for airport purposes. It will suitably operate and maintain the airport and all facilities thereon or connected therewith, with due regard to climatic and flood conditions. Any proposal to temporarily close the airport for non-aeronautical purposes must first be approved by the Secretary. In furtherance of this assurance, the sponsor will have in effect arrangements for:

   1. Operating the airport's aeronautical facilities whenever required;

   2. Promptly marking and lighting hazards resulting from airport conditions, including temporary conditions; and

   3. Promptly notifying pilots of any condition affecting aeronautical use of the airport. Nothing contained herein shall be construed to require that the airport be operated for aeronautical use during temporary periods when snow, flood, or other climatic conditions

interfere with such operation and maintenance. Further, nothing herein shall be construed as requiring the maintenance, repair, restoration, or replacement of any structure or facility which is substantially damaged or destroyed due to an act of God or other condition or circumstance beyond the control of the sponsor.

b. It will suitably operate and maintain noise compatibility program items that it owns or controls upon which federal funds have been expended.

20. Hazard Removal and Mitigation.

It will take appropriate action to ensure that such terminal airspace as is required to protect instrument and visual operations to the airport (including established minimum flight altitudes) will be adequately cleared and protected by removing, lowering, relocating, marking, or lighting or otherwise mitigating existing airport hazards and by preventing the establishment or creation of future airport hazards.

21. Compatible Land Use.

It will take appropriate action, to the extent reasonable, including the adoption of zoning laws, to restrict the use of land adjacent to or in the immediate vicinity of the airport to activities and purposes compatible with normal airport operations, including landing and takeoff of aircraft. In addition, if the project is for noise compatibility program implementation, it will not cause or permit any change in land use, within its jurisdiction, that will reduce its compatibility, with respect to the airport, of the noise compatibility program measures upon which federal funds have been expended.

22. Economic Nondiscrimination.

a. It will make the airport available as an airport for public use on reasonable terms and without unjust discrimination to all types, kinds and classes of aeronautical activities, including commercial aeronautical activities offering services to the public at the airport.

b. In any agreement, contract, lease, or other arrangement under which a right or privilege at the airport is granted to any person, firm, or corporation to conduct or to engage in any aeronautical activity for furnishing services to the public at the airport, the sponsor will insert and enforce provisions requiring the contractor to:

1. Furnish said services on a reasonable, and not unjustly discriminatory, basis to all users thereof, and

2. Charge reasonable, and not unjustly discriminatory, prices for each unit or service, provided that the contractor may be allowed to make reasonable and nondiscriminatory discounts, rebates, or other similar types of price reductions to volume purchasers.

c. Each fixed-based operator at the airport shall be subject to the same rates, fees, rentals, and other charges as are uniformly applicable to all other fixed-based operators making the same or similar uses of such airport and utilizing the same or similar facilities.

d. Each air carrier using such airport shall have the right to service itself or to use any fixed-based operator that is authorized or permitted by the airport to serve any air carrier at such airport.

e. Each air carrier using such airport (whether as a tenant, non-tenant, or subtenant of another air carrier tenant) shall be subject to such nondiscriminatory and substantially comparable rules, regulations, conditions, rates, fees, rentals, and other charges with respect to facilities directly and substantially related to providing air transportation as are applicable to all such air carriers

which make similar use of such airport and utilize similar facilities, subject to reasonable classifications such as tenants or non-tenants and signatory carriers and non-signatory carriers. Classification or status as tenant or signatory shall not be unreasonably withheld by any airport provided an air carrier assumes obligations substantially similar to those already imposed on air carriers in such classification or status.

f. It will not exercise or grant any right or privilege which operates to prevent any person, firm, or corporation operating aircraft on the airport from performing any services on its own aircraft with its own employees (including, but not limited to maintenance, repair, and fueling) that it may choose to perform.

g. In the event the sponsor itself exercises any of the rights and privileges referred to in this assurance, the services involved will be provided on the same conditions as would apply to the furnishing of such services by commercial aeronautical service providers authorized by the sponsor under these provisions.

h. The sponsor may establish such reasonable, and not unjustly discriminatory, conditions to be met by all users of the airport as may be necessary for the safe and efficient operation of the airport.

i. The sponsor may prohibit or limit any given type, kind or class of aeronautical use of the airport if such action is necessary for the safe operation of the airport or necessary to serve the civil aviation needs of the public.

23. Exclusive Rights.

It will permit no exclusive right for the use of the airport by any person providing, or intending to provide, aeronautical services to the public. For purposes of this paragraph, the providing of the services at an airport by a single fixed-based operator shall not be construed as an exclusive right if both of the following apply:

a. It would be unreasonably costly, burdensome, or impractical for more than one fixed-based operator to provide such services, and

b. If allowing more than one fixed-based operator to provide such services would require the reduction of space leased pursuant to an existing agreement between such single fixed-based operator and such airport. It further agrees that it will not, either directly or indirectly, grant or permit any person, firm, or corporation, the exclusive right at the airport to conduct any aeronautical activities, including, but not limited to charter flights, pilot training, aircraft rental and sightseeing, aerial photography, crop dusting, aerial advertising and surveying, air carrier operations, aircraft sales and services, sale of aviation petroleum products whether or not conducted in conjunction with other aeronautical activity, repair and maintenance of aircraft, sale of aircraft parts, and any other activities which because of their direct relationship to the operation of aircraft can be regarded as an aeronautical activity, and that it will terminate any exclusive right to conduct an aeronautical activity now existing at such an airport before the grant of any assistance under Title 49, United States Code.

24. Fee and Rental Structure.

It will maintain a fee and rental structure for the facilities and services at the airport which will make the airport as self-sustaining as possible under the circumstances existing at the particular airport, taking into account such factors as the volume of traffic and economy of collection. No part of the federal share of an airport development, airport planning or noise compatibility project for

which a grant is made under Title 49, United States Code, the Airport and Airway Improvement Act of 1982, the Federal Airport Act or the Airport and Airway Development Act of 1970 shall be included in the rate basis in establishing fees, rates, and charges for users of that airport.

25. Airport Revenues.

a. All revenues generated by the airport and any local taxes on aviation fuel established after December 30, 1987, will be expended by it for the capital or operating costs of the airport; the local airport system; or other local facilities which are owned or operated by the owner or operator of the airport and which are directly and substantially related to the actual air transportation of passengers or property; or for noise mitigation purposes on or off the airport. The following exceptions apply to this paragraph:

   1. If covenants or assurances in debt obligations issued before September 3, 1982, by the owner or operator of the airport, or provisions enacted before September 3, 1982, in governing statutes controlling the owner or operator's financing, provide for the use of the revenues from any of the airport owner or operator's facilities, including the airport, to support not only the airport but also the airport owner or operator's general debt obligations or other facilities, then this limitation on the use of all revenues generated by the airport (and, in the case of a public airport, local taxes on aviation fuel) shall not apply.

   2. If the Secretary approves the sale of a privately owned airport to a public sponsor and provides funding for any portion of the public sponsor’s acquisition of land, this limitation on the use of all revenues generated by the sale shall not apply to certain proceeds from the sale. This is conditioned on repayment to the Secretary by the private owner of an amount equal to the remaining unamortized portion (amortized over a 20-year period) of any airport improvement grant made to the private owner for any purpose other than land acquisition on or after October 1, 1996, plus an amount equal to the federal share of the current fair market value of any land acquired with an airport improvement grant made to that airport on or after October 1, 1996.

   3. Certain revenue derived from or generated by mineral extraction, production, lease, or other means at a general aviation airport (as defined at 49 USC § 47102), if the FAA determines the airport sponsor meets the requirements set forth in Section 813 of Public Law 112-95.

b. As part of the annual audit required under the Single Audit Act of 1984, the sponsor will direct that the audit will review, and the resulting audit report will provide an opinion concerning, the use of airport revenue and taxes in paragraph (a), and indicating whether funds paid or transferred to the owner or operator are paid or transferred in a manner consistent with Title 49, United States Code and any other applicable provision of law, including any regulation promulgated by the Secretary or Administrator.

c. Any civil penalties or other sanctions will be imposed for violation of this assurance in accordance with the provisions of 49 USC § 47107.

26. Reports and Inspections.

It will:

a. submit to the Secretary such annual or special financial and operations reports as the Secretary may reasonably request and make such reports available to the public; make available to the

public at reasonable times and places a report of the airport budget in a format prescribed by the Secretary;

b. for airport development projects, make the airport and all airport records and documents affecting the airport, including deeds, leases, operation and use agreements, regulations and other instruments, available for inspection by any duly authorized agent of the Secretary upon reasonable request;

c. for noise compatibility program projects, make records and documents relating to the project and continued compliance with the terms, conditions, and assurances of this Grant Agreement including deeds, leases, agreements, regulations, and other instruments, available for inspection by any duly authorized agent of the Secretary upon reasonable request; and

d. in a format and time prescribed by the Secretary, provide to the Secretary and make available to the public following each of its fiscal years, an annual report listing in detail:

   1. all amounts paid by the airport to any other unit of government and the purposes for which each such payment was made; and

   2. all services and property provided by the airport to other units of government and the amount of compensation received for provision of each such service and property.

27. Use by Government Aircraft.

It will make available all of the facilities of the airport developed with federal financial assistance and all those usable for landing and takeoff of aircraft to the United States for use by Government aircraft in common with other aircraft at all times without charge, except, if the use by Government aircraft is substantial, charge may be made for a reasonable share, proportional to such use, for the cost of operating and maintaining the facilities used. Unless otherwise determined by the Secretary, or otherwise agreed to by the sponsor and the using agency, substantial use of an airport by Government aircraft will be considered to exist when operations of such aircraft are in excess of those which, in the opinion of the Secretary, would unduly interfere with use of the landing areas by other authorized aircraft, or during any calendar month that:

a. Five (5) or more Government aircraft are regularly based at the airport or on land adjacent thereto; or

b. The total number of movements (counting each landing as a movement) of Government aircraft is 300 or more, or the gross accumulative weight of Government aircraft using the airport (the total movement of Government aircraft multiplied by gross weights of such aircraft) is in excess of five million pounds.

28. Land for Federal Facilities.

It will furnish without cost to the Federal Government for use in connection with any air traffic control or air navigation activities, or weather-reporting and communication activities related to air traffic control, any areas of land or water, or estate therein as the Secretary considers necessary or desirable for construction, operation, and maintenance at federal expense of space or facilities for such purposes. Such areas or any portion thereof will be made available as provided herein within four months after receipt of a written request from the Secretary.

29. Airport Layout Plan.

a. The airport owner or operator will maintain a current airport layout plan of the airport showing:

1. boundaries of the airport and all proposed additions thereto, together with the boundaries of all offsite areas owned or controlled by the sponsor for airport purposes and proposed additions thereto;

2. the location and nature of all existing and proposed airport facilities and structures (such as runways, taxiways, aprons, terminal buildings, hangars and roads), including all proposed extensions and reductions of existing airport facilities;

3. the location of all existing and proposed non-aviation areas and of all existing improvements thereon; and

4. all proposed and existing access points used to taxi aircraft across the airport's property boundary.

b. Subject to subsection 49 USC § 47107(x), the Secretary will review and approve or disapprove the plan and any revision or modification of the plan before the plan, revision, or modification takes effect.

c. The owner or operator will not make or allow any alteration in the airport or any of its facilities unless the alteration—

1. is outside the scope of the Secretary's review and approval authority as set forth in subsection (x); or

2. complies with the portions of the plan approved by the Secretary.

d. When the airport owner or operator makes a change or alteration in the airport or the facilities which the Secretary determines adversely affects the safety, utility, or efficiency of any federally owned, leased, or funded property on or off the airport and which is not in conformity with the airport layout plan as approved by the Secretary, the owner or operator will, if requested, by the Secretary:

1. eliminate such adverse effect in a manner approved by the Secretary; or

2. bear all costs of relocating such property or its replacement to a site acceptable to the Secretary and of restoring the property or its replacement to the level of safety, utility, efficiency, and cost of operation that existed before the alteration was made, except in the case of a relocation or replacement of an existing airport facility due to a change in the Secretary's design standards beyond the control of the airport sponsor.

30. Civil Rights.

It will promptly take any measures necessary to ensure that no person in the United States shall, on the grounds of race, color, and national origin (including limited English proficiency) in accordance with the provisions of Title VI of the Civil Rights Act of 1964 (42 USC §§ 2000d to 2000d-4); creed and sex per 49 USC § 47123 and related requirements; age per the Age Discrimination Act of 1975 and related requirements; or disability per the Americans with Disabilities Act of 1990 and related requirements, be excluded from participation in, be denied the benefits of, or be otherwise subjected to discrimination in any program and activity conducted with, or benefiting from, funds received from this grant.

a. Using the definitions of activity, facility, and program as found and defined in 49 CFR §§ 21.23(b) and 21.23(e), the sponsor will facilitate all programs, operate all facilities, or conduct all programs in compliance with all non-discrimination requirements imposed by or pursuant to these assurances.

b. Applicability

   1. Programs and Activities. If the sponsor has received a grant (or other federal assistance) for any of the sponsor's program or activities, these requirements extend to all of the sponsor's programs and activities.

   2. Facilities. Where it receives a grant or other federal financial assistance to construct, expand, renovate, remodel, alter, or acquire a facility, or part of a facility, the assurance extends to the entire facility and facilities operated in connection therewith.

   3. Real Property. Where the sponsor receives a grant or other federal financial assistance in the form of, or for the acquisition of real property or an interest in real property, the assurance will extend to rights to space on, over, or under such property.

c. Duration.

   The sponsor agrees that it is obligated to this assurance for the period during which federal financial assistance is extended to the program, except where the federal financial assistance is to provide, or is in the form of, personal property, or real property, or interest therein, or structures or improvements thereon, in which case the assurance obligates the sponsor, or any transferee for the longer of the following periods:

   1. So long as the airport is used as an airport, or for another purpose involving the provision of similar services or benefits; or

   2. So long as the sponsor retains ownership or possession of the property.

d. Required Solicitation Language. It will include the following notification in all solicitations for bids, Requests For Proposals for work, or material under this Grant Agreement and in all proposals for agreements, including airport concessions, regardless of funding source:

   "The County of Flagler, in accordance with the provisions of Title VI of the Civil Rights Act of 1964 (42 USC §§ 2000d to 2000d-4) and the Regulations, hereby notifies all bidders or offerors that it will affirmatively ensure that for any contract entered into pursuant to this advertisement, all businesses will be afforded full and fair opportunity to submit bids in response to this invitation and no businesses will be discriminated against on the grounds of race, color, national origin (including limited English proficiency), creed, sex , age, or disability in consideration for an award."

e. Required Contract Provisions.

   1. It will insert the non-discrimination contract clauses requiring compliance with the acts and regulations relative to non-discrimination in federally-assisted programs of the Department of Transportation (DOT), and incorporating the acts and regulations into the contracts by reference in every contract or agreement subject to the non-discrimination in federally-assisted programs of the DOT acts and regulations.

   2. It will include a list of the pertinent non-discrimination authorities in every contract that is subject to the non-discrimination acts and regulations.

3. It will insert non-discrimination contract clauses as a covenant running with the land, in any deed from the United States effecting or recording a transfer of real property, structures, use, or improvements thereon or interest therein to a sponsor.

4. It will insert non-discrimination contract clauses prohibiting discrimination on the basis of race, color, national origin (including limited English proficiency), creed, sex, age, or disability as a covenant running with the land, in any future deeds, leases, license, permits, or similar instruments entered into by the sponsor with other parties:

    a. For the subsequent transfer of real property acquired or improved under the applicable activity, project, or program; and

    b. For the construction or use of, or access to, space on, over, or under real property acquired or improved under the applicable activity, project, or program.

f. It will provide for such methods of administration for the program as are found by the Secretary to give reasonable guarantee that it, other recipients, sub-recipients, sub-grantees, contractors, subcontractors, consultants, transferees, successors in interest, and other participants of federal financial assistance under such program will comply with all requirements imposed or pursuant to the acts, the regulations, and this assurance.

g. It agrees that the United States has a right to seek judicial enforcement with regard to any matter arising under the acts, the regulations, and this assurance.

31. Disposal of Land.

a. For land purchased under a grant for airport noise compatibility purposes, including land serving as a noise buffer, it will dispose of the land, when the land is no longer needed for such purposes, at fair market value, at the earliest practicable time. That portion of the proceeds of such disposition which is proportionate to the United States' share of acquisition of such land will be, at the discretion of the Secretary, (1) reinvested in another project at the airport, or (2) transferred to another eligible airport as prescribed by the Secretary. The Secretary shall give preference to the following, in descending order:

    1. Reinvestment in an approved noise compatibility project;

    2. Reinvestment in an approved project that is eligible for grant funding under 49 USC § 47117(e);

    3. Reinvestment in an approved airport development project that is eligible for grant funding under 49 USC §§ 47114, 47115, or 47117;

    4. Transfer to an eligible sponsor of another public airport to be reinvested in an approved noise compatibility project at that airport; or

    5. Payment to the Secretary for deposit in the Airport and Airway Trust Fund.

    If land acquired under a grant for noise compatibility purposes is leased at fair market value and consistent with noise buffering purposes, the lease will not be considered a disposal of the land. Revenues derived from such a lease may be used for an approved airport development project that would otherwise be eligible for grant funding or any permitted use of airport revenue.

b. For land purchased under a grant for airport development purposes (other than noise compatibility), it will, when the land is no longer needed for airport purposes, dispose of such land at fair market value or make available to the Secretary an amount equal to the United

States' proportionate share of the fair market value of the land. That portion of the proceeds of such disposition which is proportionate to the United States' share of the cost of acquisition of such land will, upon application to the Secretary, be reinvested or transferred to another eligible airport as prescribed by the Secretary. The Secretary shall give preference to the following, in descending order:

1. Reinvestment in an approved noise compatibility project;
2. Reinvestment in an approved project that is eligible for grant funding under 49 USC § 47117(e);
3. Reinvestment in an approved airport development project that is eligible for grant funding under 49 USC §§ 47114, 47115, or 47117;
4. Transfer to an eligible sponsor of another public airport to be reinvested in an approved noise compatibility project at that airport; or
5. Payment to the Secretary for deposit in the Airport and Airway Trust Fund.

c. Land shall be considered to be needed for airport purposes under this assurance if (1) it may be needed for aeronautical purposes (including runway protection zones) or serve as noise buffer land, and (2) the revenue from interim uses of such land contributes to the financial self-sufficiency of the airport. Further, land purchased with a grant received by an airport operator or owner before December 31, 1987, will be considered to be needed for airport purposes if the Secretary or federal agency making such grant before December 31, 1987, was notified by the operator or owner of the uses of such land, did not object to such use, and the land continues to be used for that purpose, such use having commenced no later than December 15, 1989.

d. Disposition of such land under (a), (b), or (c) will be subject to the retention or reservation of any interest or right therein necessary to ensure that such land will only be used for purposes which are compatible with noise levels associated with operation of the airport.

32. Engineering and Design Services.

If any phase of such project has received federal funds under Chapter 471 subchapter 1 of Title 49 USC, it will award each contract, or sub-contract for program management, construction management, planning studies, feasibility studies, architectural services, preliminary engineering, design, engineering, surveying, mapping or related services in the same manner as a contract for architectural and engineering services is negotiated under Chapter 11 of Title 40 U S.C., or an equivalent qualifications-based requirement prescribed for or by the sponsor of the airport.

33. Foreign Market Restrictions.

It will not allow funds provided under this grant to be used to fund any project which uses any product or service of a foreign country during the period in which such foreign country is listed by the United States Trade Representative as denying fair and equitable market opportunities for products and suppliers of the United States in procurement and construction.

34. Policies, Standards, and Specifications.

It will carry out any project funded under an Airport Improvement Program Grant in accordance with policies, standards, and specifications approved by the Secretary including, but not limited to, current FAA Advisory Circulars (https://www.faa.gov/airports/aip/aip_pfc_checklist) for AIP projects as of August 14, 2026.

35. Relocation and Real Property Acquisition.

a. It will be guided in acquiring real property, to the greatest extent practicable under state law, by the land acquisition policies in Subpart B of 49 CFR Part 24 and will pay or reimburse property owners for necessary expenses as specified in Subpart B.

b. It will provide a relocation assistance program offering the services described in Subpart C of 49 CFR Part 24 and fair and reasonable relocation payments and assistance to displaced persons as required in Subpart D and E of 49 CFR Part 24.

c. It will make available within a reasonable period of time prior to displacement, comparable replacement dwellings to displaced persons in accordance with Subpart E of 49 CFR Part 24.

36. Access By Intercity Buses.

The airport owner or operator will permit, to the maximum extent practicable, intercity buses or other modes of transportation to have access to the airport; however, it has no obligation to fund special facilities for intercity buses or for other modes of transportation.

37. Disadvantaged Business Enterprises (DBE)/Airport Concessions Disadvantage Business Enterprise (ACDBE) Program.

The sponsor shall not discriminate on the basis of race, color, national origin, or sex in the award and performance of any DOT-assisted contract covered by 49 CFR Part 26, or in the award and performance of any concession activity contract covered by 49 CFR Part 23. In addition, the sponsor shall not discriminate on the basis of race, color, national origin or sex in the administration of its Disadvantaged Business Enterprise (DBE) and Airport Concessions Disadvantaged Business Enterprise (ACDBE) programs or the requirements of 49 CFR Parts 23 and 26. The sponsor shall take all necessary and reasonable steps under 49 CFR Parts 23 and 26 to ensure nondiscrimination in the award and administration of DOT-assisted contracts, and/or concession contracts. The sponsor's DBE and ACDBE programs, as required by 49 CFR Parts 26 and 23, and as approved by DOT, are incorporated by reference in this agreement. Implementation of these programs is a legal obligation and failure to carry out its terms shall be treated as a violation of this agreement. Upon notification to the sponsor of its failure to carry out its approved program, the Department may impose sanctions as provided for under Part 26 and may, in appropriate cases, refer the matter for enforcement under 18 USC § 1001 and/or the Program Fraud Civil Remedies Act of 1986 (31 USC §§ 3801-3809, 3812).

38. Hangar Construction.

If the airport owner or operator and a person who owns an aircraft agree that a hangar is to be constructed at the airport for the aircraft at the aircraft owner's expense, the airport owner or operator will grant to the aircraft owner for the hangar a long term lease that is subject to such terms and conditions on the hangar as the airport owner or operator may impose.

39. Competitive Access.

a. If the airport owner or operator of a medium or large hub airport (as defined in 49 USC § 47102) has been unable to accommodate one or more requests by an air carrier for access to gates or other facilities at that airport in order to allow the air carrier to provide service to the airport or to expand service at the airport, the airport owner or operator shall transmit a report to the Secretary that:

1. Describes the requests;

2. Provides an explanation as to why the requests could not be accommodated; and
3. Provides a time frame within which, if any, the airport will be able to accommodate the requests.

b. Such report shall be due on either February 1 or August 1 of each year if the airport has been unable to accommodate the request(s) in the six month period prior to the applicable due date.

40. Access to Leaded Aviation Gasoline

a. If 100-octane low lead aviation gasoline (100LL) was made available at an airport, at any time during calendar year 2022, an airport owner or operator may not restrict or prohibit the sale of, or self-fueling with, 100-octane low lead aviation gasoline.

b. This requirement remains until the earlier of December 31, 2030, or the date on which the airport or any retail fuel seller at the airport makes available an unleaded aviation gasoline that has been authorized for use by the FAA as a replacement for 100-octane low lead aviation gasoline for use in nearly all piston-engine aircraft and engine models; and meets either an industry consensus standard or other standard that facilitates the safe use, production, and distribution of such unleaded aviation gasoline, as determined appropriate by the FAA.

c. An airport owner or operator understands and agrees, that any violation of this grant assurance is subject to civil penalties as provided for in 49 USC § 46301(a)(8).

AVCON, INC.
Engineers & Planners

5555 E. Michigan Street
Orlando, FL 32822
Phone: (407) 599-1122
www.avconinc.com

August 19th, 2026

Mr. Roy Sieger
Airport Director
Flagler Executive Airport
201 Airport Rd,
Palm Coast, FL 32164

Reference: Recommendation of Award for 26-ITB-018
Air Traffic Control Tower Rehabilitation
Flagler Executive Airport

Mr. Roy Sieger:

On August 14th, 2026 at 10:00AM, the County received bids on the above-referenced project. A total of one (1) bid was received as follows:

	Bid Sch A	Bid Sch B	Bid Sch C	Bid Sch D	Bid Sch E	Bid Sch F
Saboungi Construction, Inc.	**$318,120.00**	**$267,520.00**	**$127,237.00**	**$89,430.00**	**$91,850.00**	**$24,365.00**

A detailed Bid Tabulation is attached.

The apparent low bidder is **Saboungi Construction, Inc. (Saboungi)** whose Total Bid is **$ $1,038,522.00**. Saboungi submitted the required fillable bid forms, including the 5% Bid Security with notarized Power of Attorney, acknowledgement of Addendum 1, and sub-contractors to be used. Saboungi's bid appears to be complete and responsive. Additionally, while only a single bid was received, the total bid price and individual line-item pricing is reasonable and consistent with industry standards as well as recent comparable project bid openings at other airports in the region.

After discussions with the FAA after the receipt of bids, the allowances that were included for unforeseen conditions are not eligible for FAA funding/reimbursement. Those line items shall be removed from the bid tabulation, and totals were recalculated based on the line-item pricing only.

Due to the limitations of project grant funding, all bid schedules cannot be awarded at this time. Based on review of the proposal, and the availability of funding, Bid Schedule A & E shall be awarded at this time, and Bid Schedules B, C, D, and F shall not be awarded as part of this solicitation. Saboungi's combined total bid price for Bid Schedules **A** and **E** is **$409,970.00**.

Notwithstanding the County's Legal Counsel review, **AVCON** recommends award of the contract to **Saboungi Construction, Inc.** for the Total Bid amount of **Four Hundred Nine Thousand Nine Hundred Seventy Dollars and 00/100 ($409,970.00),** subject to the availability of funding.

We stand ready to assist the County in the implementation of this project. Should you have any questions or require additional information, please do not hesitate to call.

Sincerely,

AVCON, INC.

Daniel Nickols, P.E.
Associate Vice President

Attachment: Bid Tabulation

FLAGLER EXECUTIVE AIRPORT

26-ITB-018 - AIR TRAFFIC CONTROL TOWER REHABILITATION

BID TABULATION

					Saboungi Construction, Inc.	
Item No.	**Spec**	**Description**	**Est. Qty.**	**Unit**	**Unit Price**	**Extension**
Bid Schedule A - Structural Repairs and Replacements						
1	--	GENERAL REQUIREMENTS	1	LS	$58,300.00	$58,300.00
2	C-105	MOBILIZATION (10% MAXIMUM)	1	LS	$38,720.00	$38,720.00
3	--	REPAIR, PATCH, OR RESTORE EXISTING ATCT CONCRETE WALLS	1	LS	$8,800.00	$8,800.00
4	--	REMOVE AND REPLACE WITH NEW, ATCT TOWER CAB CATWALK WITH NEW ALUMINUM BEAMS, STRUCTURAL GRATING, AND GUARDRAILS	1	LS	$187,000.00	$187,000.00
5	--	CLEAN, REMOVE CORROSION, AND INSPECT ATCT CAB/CATWALK STRUCTURAL STEEL	1	LS	$22,000.00	$22,000.00
6	GP-80	CONSTRUCTION SAFETY AND PHASING PLAN COMPLIANCE (MOT)	1	LS	$3,300.00	$3,300.00
7	--	ATCT CAB/CATWALK STRUCTURAL STEEL REPLACEMENT ALLOWANCE (NOT ELIGIBLE FOR FAA FUNDING, REMOVED FROM BID TABULATION)	1	ALLOW	$0.00	$0.00
		BID SCHEDULE A TOTAL				**$318,120.00**
Bid Schedule B - Architectural Repairs and Replacements						
8	--	GENERAL REQUIREMENTS	1	LS	$53,900.00	$53,900.00
9	C-105	MOBILIZATION (10% MAXIMUM)	1	LS	$27,500.00	$27,500.00
10	--	REMOVE AND REPLACE EXISTING ROOF SYSTEM INCLUDING INSULATION AND DRAINS	1	LS	$35,200.00	$35,200.00
11	--	REMOVE AND REPLACE WITH NEW, LIGHTNING PROTECTION SYSTEM	1	LS	$33,000.00	$33,000.00
12	--	REMOVE AND REPLACE METAL WALL PANEL SYSTEM AND COPING CAP	1	LS	$15,070.00	$15,070.00
13	--	REMOVE AND REPLACE ROOF HATCH AND LADDER	1	LS	$4,950.00	$4,950.00
14	--	REMOVE AND REPLACE HVAC CURBS	1	LS	$5,500.00	$5,500.00
15	--	REMOVE AND REPLACE WINDOW SEALANT ON WINDOWS IN EXTERIOR CONCRETE WALL PANELS	1	LS	$8,800.00	$8,800.00
16	--	REPAIR WINDOWS ON THE TOP FLOOR OF THE ATCT	1	LS	$13,200.00	$13,200.00
17	--	REMOAVE AND REPLACE JOINT SEALANT & REPAINT ATCT EXTERIOR WALLS	1	LS	$44,000.00	$44,000.00
18	--	ATCT INTERIOR REPAIRS AND REHABILITATION	1	LS	$19,800.00	$19,800.00
19	--	REMOVE AND REPLACE CATWALK ACCESS DOOR	1	LS	$1,100.00	$1,100.00
20	--	REMOVE AND REPLACE EXTERIOR HOLLOW METAL DOOR AND DOOR HARDWARE	1	LS	$2,200.00	$2,200.00
21	GP-80	CONSTRUCTION SAFETY AND PHASING PLAN COMPLIANCE (MOT)	1	LS	$3,300.00	$3,300.00
22	--	UNFORESEEN ARCHITECTURAL REPAIRS ALLOWANCE (NOT ELIGIBLE FOR FAA FUNDING, REMOVED FROM BID TABULATION)	1	ALLOW	$0.00	$0.00
		BID SCHEDULE B TOTAL				**$267,520.00**
Bid Schedule C - Mechanical Repairs and Replacements						
23	--	GENERAL REQUIREMENTS	1	LS	$9,097.00	$9,097.00
24	C-105	MOBILIZATION (10% MAXIMUM)	1	LS	$14,190.00	$14,190.00
25	--	REMOVE AND REPLACE 1-TON MINI SPLIT AHU AND CU	1	LS	$6,600.00	$6,600.00
26	--	REMOVE AND REPLACE ALL PTAC UNITS	1	LS	$30,800.00	$30,800.00
27	--	REMOVE AND REPLACE ROOFTOP RTU'S	1	LS	$36,300.00	$36,300.00
28	--	REMOVE AND REPLACE TOWER CAB ACOUSTIC TILES & AIR TERMINAL DEVICES	1	LS	$16,500.00	$16,500.00
29	--	REROUTE CONDESATE DRAIN LINES DOWN BUILDING EXTERIOR THROUGH ATCT CATWALK	1	LS	$11,000.00	$11,000.00
30	GP-80	CONSTRUCTION SAFETY AND PHASING PLAN COMPLIANCE (MOT)	1	LS	$2,750.00	$2,750.00
31	--	UNFORESEEN MECHANICAL REPAIRS ALLOWANCE (NOT ELIGIBLE FOR FAA FUNDING, REMOVED FROM BID TABULATION)	1	ALLOW	$0.00	$0.00
		BID SCHEDULE C TOTAL				**$127,237.00**
Bid Schedule D - Electrical Repairs and Replacements						
32	--	GENERAL REQUIREMENTS	1	LS	$16,940.00	$16,940.00
33	C-105	MOBILIZATION (10% MAXIMUM)	1	LS	$10,340.00	$10,340.00
34	--	PERFORM FUNCTION TESTING OF BACKUP GENERATOR AND PROVIDE REPORT	1	LS	$4,400.00	$4,400.00
35	--	REFEED ALL EXISTING OR PROPOSED MECHANICAL UNITS	1	LS	$13,200.00	$13,200.00
36	--	REMOVE AND REPLACE TWO (2) BUILDING EXTERIOR LIGHTS WITH LED LIGHTS	1	LS	$2,200.00	$2,200.00
37	--	INSTALL NEW LED ATCT BUILDING UPLIGHTING	1	LS	$6,600.00	$6,600.00
38	--	REMOVE AND REPLACE ALL BUILDING INTERIOR LIGHT FIXTURES WITH LED EQUIVALENT	1	LS	$33,000.00	$33,000.00
39	GP-80	CONSTRUCTION SAFETY AND PHASING PLAN COMPLIANCE (MOT)	1	LS	$2,750.00	$2,750.00
40	--	UNFORESEEN ELECTRICAL REPAIRS ALLOWANCE (NOT ELIGIBLE FOR FAA FUNDING, REMOVED FROM BID TABULATION)	1	ALLOW	$0.00	$0.00
		BID SCHEDULE D TOTAL				**$89,430.00**
Bid Schedule E - Access Control System Replacement						
41	--	GENERAL REQUIREMENTS	1	LS	$7,700.00	$7,700.00
42	C-105	MOBILIZATION (10% MAXIMUM)	1	LS	$5,500.00	$5,500.00
43	--	REMOVE AND REPLACE EXTERIOR VEHICULAR GATE ACCESS CONTROL SYSTEM	1	LS	$33,000.00	$33,000.00
44	--	REMOVE AND REPLACE ATCT EXTERIOR BUILDING AND ELEVATOR ACCESS COTNROL SYSTEMS	1	LS	$33,000.00	$33,000.00
45	--	PROVIDE SYNCED ACCESS CONTROL FOR EXTERIOR VEHICULAR GATE, BUILDING ACCESS, AND ELEVATOR ACCESS (SINGLE CARD SYSTEM)	1	LS	$11,000.00	$11,000.00
46	GP-80	CONSTRUCTION SAFETY AND PHASING PLAN COMPLIANCE (MOT)	1	LS	$1,650.00	$1,650.00
		BID SCHEDULE E TOTAL				**$91,850.00**
Bid Schedule F - Civil/Site Improvements						
47	--	GENERAL REQUIREMENTS	1	LS	$7,700.00	$7,700.00
48	C-105	MOBILIZATION (10% MAXIMUM)	1	LS	$2,420.00	$2,420.00
49	P-632	SEAL-COAT/REJUVENATE EXISTING PARKING LOT ASPHALT PAVEMENT	3500	SF	$2.75	$9,625.00
50	--	RE-PAINT EXISTING BOLLARDS	2	EACH	$110.00	$220.00
51		REMOVE, REINSTALL, AND PAINT CONCRETE PARKING BLOCKS (YELLOW)	5	EACH	$220.00	$1,100.00
52	T-904	SODDING AND RESTORATION	1	LS	$1,650.00	$1,650.00
53	GP-80	CONSTRUCTION SAFETY AND PHASING PLAN COMPLIANCE (MOT)	1	LS	$1,650.00	$1,650.00
		BID SCHEDULE F TOTAL				**$24,365.00**

Bid Tabulation completed by Daniel Nickols, P.E., Associate Vice President, AVCON, INC.
Signed:

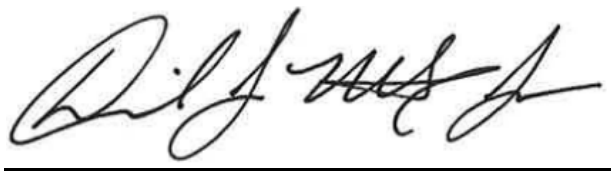

CERTIFICATE OF LIABILITY INSURANCE

DATE (MM/DD/YYYY): 09/11/2026

THIS CERTIFICATE IS ISSUED AS A MATTER OF INFORMATION ONLY AND CONFERS NO RIGHTS UPON THE CERTIFICATE HOLDER. THIS CERTIFICATE DOES NOT AFFIRMATIVELY OR NEGATIVELY AMEND, EXTEND OR ALTER THE COVERAGE AFFORDED BY THE POLICIES BELOW. THIS CERTIFICATE OF INSURANCE DOES NOT CONSTITUTE A CONTRACT BETWEEN THE ISSUING INSURER(S), AUTHORIZED REPRESENTATIVE OR PRODUCER, AND THE CERTIFICATE HOLDER.

IMPORTANT: If the certificate holder is an ADDITIONAL INSURED, the policy(ies) must have ADDITIONAL INSURED provisions or be endorsed. If SUBROGATION IS WAIVED, subject to the terms and conditions of the policy, certain policies may require an endorsement. A statement on this certificate does not confer rights to the certificate holder in lieu of such endorsement(s).

PRODUCER	CONTACT NAME: Julie Kuhlman	
Brown & Brown Insurance Services, Inc. P.O. Box 2412 Daytona Beach FL 32115-2415	PHONE (A/C, No, Ext): (386) 252-9601	FAX (A/C, No): (386) 239-5729
	E-MAIL ADDRESS: Julie.Kuhlman@bbrown.com	

INSURED	INSURER(S) AFFORDING COVERAGE	NAIC #
SABOUNGI CONSTRUCTION, INC. 290-A NORTH US HIGHWAY 1 ORMOND BEACH FL 32174	INSURER A : Cumis Specialty Insurance Company, Inc.	12758
	INSURER B : Palomar Excess and Surplus Insurance Company	16754
	INSURER C : XL Specialty Insurance Company	37885
	INSURER D : American Interstate Insurance Company	31895
	INSURER E : Certain Underwriters at Lloyd's London	
	INSURER F : Geico Marine Insurance Company	37923

COVERAGES **CERTIFICATE NUMBER:** 26-27 **REVISION NUMBER:**

THIS IS TO CERTIFY THAT THE POLICIES OF INSURANCE LISTED BELOW HAVE BEEN ISSUED TO THE INSURED NAMED ABOVE FOR THE POLICY PERIOD INDICATED. NOTWITHSTANDING ANY REQUIREMENT, TERM OR CONDITION OF ANY CONTRACT OR OTHER DOCUMENT WITH RESPECT TO WHICH THIS CERTIFICATE MAY BE ISSUED OR MAY PERTAIN, THE INSURANCE AFFORDED BY THE POLICIES DESCRIBED HEREIN IS SUBJECT TO ALL THE TERMS, EXCLUSIONS AND CONDITIONS OF SUCH POLICIES. LIMITS SHOWN MAY HAVE BEEN REDUCED BY PAID CLAIMS.

INSR LTR	TYPE OF INSURANCE	ADDL INSD	SUBR WVD	POLICY NUMBER	POLICY EFF (MM/DD/YYYY)	POLICY EXP (MM/DD/YYYY)	LIMITS	
A	[X] COMMERCIAL GENERAL LIABILITY [ ] CLAIMS-MADE [X] OCCUR GEN'L AGGREGATE LIMIT APPLIES PER: [ ] POLICY [X] PRO-JECT [ ] LOC [ ] OTHER:			PGIA0136400	01/31/2026	01/31/2027	EACH OCCURRENCE DAMAGE TO RENTED PREMISES (Ea occurrence) MED EXP (Any one person) PERSONAL & ADV INJURY GENERAL AGGREGATE PRODUCTS - COMP/OP AGG	$ 1,000,000 $ 100,000 $ 10,000 $ 1,000,000 $ 2,000,000 $ 2,000,000
F	AUTOMOBILE LIABILITY [ ] ANY AUTO [ ] OWNED AUTOS ONLY [X] SCHEDULED AUTOS [X] HIRED AUTOS ONLY [X] NON-OWNED AUTOS ONLY			9300165660-01	06/12/2026	06/12/2027	COMBINED SINGLE LIMIT (Ea accident) BODILY INJURY (Per person) BODILY INJURY (Per accident) PROPERTY DAMAGE (Per accident) PIP	$ 1,000,000 $ $ $ $ 10,000
B	[ ] UMBRELLA LIAB [X] OCCUR [X] EXCESS LIAB [ ] CLAIMS-MADE [ ] DED [X] RETENTION $ 10,000			PESXS018068	01/31/2026	01/31/2027	EACH OCCURRENCE AGGREGATE PROD/COMPL OPS	$ 5,000,000 $ 5,000,000 $ 5,000,000
D	WORKERS COMPENSATION AND EMPLOYERS' LIABILITY ANY PROPRIETOR/PARTNER/EXECUTIVE OFFICER/MEMBER EXCLUDED? (Mandatory in NH) Y / N: Y If yes, describe under DESCRIPTION OF OPERATIONS below	N / A		AVWCFL3452322026	01/31/2026	01/31/2027	[X] PER STATUTE [ ] OTH-ER E.L. EACH ACCIDENT E.L. DISEASE - EA EMPLOYEE E.L. DISEASE - POLICY LIMIT	 $ 1,000,000 $ 1,000,000 $ 1,000,000
C	INLAND MARINE			UM00061199MA26A	01/31/2026	01/31/2027	LEASED/RENTED DED	$100,000 $1,000

DESCRIPTION OF OPERATIONS / LOCATIONS / VEHICLES (ACORD 101, Additional Remarks Schedule, may be attached if more space is required)

SEE NOTES FOR POLICY COVERAGE FORMS
PROJECT: 26-ITB-018 FIN AIR TRAFFIC CONTROL TOWER REHABILITATION
FLAGLER COUNTY BOARD OF COUNTY COMMISSIONERS AND FLAGLER EXECUTIVE AIRPORT ARE ADDITIONAL INSURED AND WAIVER OF SUBROGATION APPLIES AS REQUIRED BY WRITTEN CONTRACT AND IF APPLICABLE, PER THE FORMS LISTED ON THE ATTACHED ADDITIONAL REMARKS SCHEDULE.

CERTIFICATE HOLDER

FLAGLER COUNTY BOARD OF COUNTY COMMISSIONERS
FLAGLER EXECUTIVE AIRPORT
201 AIRPORT ROAD
PALM COAST FL 32164

CANCELLATION

SHOULD ANY OF THE ABOVE DESCRIBED POLICIES BE CANCELLED BEFORE THE EXPIRATION DATE THEREOF, NOTICE WILL BE DELIVERED IN ACCORDANCE WITH THE POLICY PROVISIONS.

AUTHORIZED REPRESENTATIVE

© 1988-2015 ACORD CORPORATION. All rights reserved.

AGENCY CUSTOMER ID: _____

LOC #: _____

ADDITIONAL REMARKS SCHEDULE

AGENCY	NAMED INSURED
Brown & Brown Insurance Services, Inc.	SABOUNGI CONSTRUCTION, INC.
POLICY NUMBER	
CARRIER / NAIC CODE	EFFECTIVE DATE:

ADDITIONAL REMARKS

THIS ADDITIONAL REMARKS FORM IS A SCHEDULE TO ACORD FORM,

FORM NUMBER: 25 **FORM TITLE:** Certificate of Liability Insurance: Notes

CONTRACTOR'S POLLUTION LIABILITY
INSURER E
POLICY #CPLI02223001
TERM: 01/31/2026 - 01/31/2027
AGGREGATE: $2,000,000
CONTRACTOR'S POLLUTION CONDITION LIMIT: $1,000,000

CURRENT BLANKET POLICY FORMS

GENERAL LIABILITY:
1) CG2010 0413- ADDITIONAL INSURED - OWNERS, LESSEES, OR CONTRACTORS - SCHEDULED PERSON OR ORGANIZATION (ADDITIONAL INSURED-ONGOING OPERATIONS)
2) CG2037 0413- ADDITIONAL INSURED - OWNERS, LESSEES, OR CONTRACTORS - COMPLETED OPERATIONS
3) CG2404 1093- WAIVER OF TRANSFER OF RIGHTS OF RECOVERY AGAINST OTHERS TO US (WAIVER OF SUBROGATION) - AUTOMATIC
4) CG2001 0413- PRIMARY AND NONCONTRIBUTORY - OTHER INSURANCE CONDITION

POLLUTION:
1.) CPL AIBLKT 0724 - ADDITIONAL INSURED - BLANKET
2.) CPL PNC 0622 - PRIMARY AND NON-CONTRIBUTORY INSURANCE
3.) CPL WOS22 1023 - WAIVER OF TRANSFER OF RIGHTS OF RECOVERY AGAINST OTHERS TO US

WORKERS COMPENSATION:
1) WC000313 0484 - WAIVER OF OUR RIGHT TO RECOVER FROM OTHERS ENDORSEMENT

EXCESS LIABILITY:
1) CX0001 0413 - EXCESS COVERAGE FORM- (FOLLOW FORM OVER THE GENERAL LIABILITY, AUTO LIABILITY AND EMPLOYERS LIABILITY)

EQUIPMENT:
1.) HCM050 0319 - (LOSS PAYEE)

© 2008 ACORD CORPORATION. All rights reserved.
The ACORD name and logo are registered marks of ACORD

Office of Procurement and Contracts
1769 E. Moody Blvd Bldg 2
Bunnell, FL 32110

www.flaglercounty.org
Phone: (386) 313-4008
Fax: (386) 313-4108

Date: September 10, 2026

To: Hassan Saboungi, Saboungi Construction

From: Shannon Burnett, Procurement Coordinator

Subject: 26-ITB-018 Air Traffic Control Tower Rehabilitation

Mr. Saboungi,

We appreciate the clarification of how the scaffolding costs were distributed in the bid schedules and understand how the dismantle and return pickup costs would become a financial burden to Saboungi Construction.

Therefore, Flagler County agrees that covering these costs is appropriate and will increase the contract award amount for 26-ITB-018 Air Traffic Control Tower Rehabilitation by $10,499.28, bringing the total contract award to $427,984.28. This increase is to cover the dismantle and return pickup costs of the gangway, which was included in Saboungi Construction's bid price for Schedule B.

Due to insufficient grant funding, the County will proceed with awarding Bid Schedules A & F only. Bid schedules B, C, D, and E are excluded in this award.

Thank you,

Shannon Burnett

Shannon Burnett

Procurement Coordinator

386-313-4062

sburnett@flaglercounty.gov

Andy Dance District 1 | **Greg Hansen** District 2 | **Kim Carney** District 3 | **Leann Pennington** District 4 | **Pam Richardson** District 5

Flagler County Board of County Commissioners
Consent: BOCC Departments / Agenda Item 7.h.

Meeting Date:	October 5, 2026
Department Contact:	Mike Dickson, General Services Director, Kelly Bowman, Procurement Coordinator
Subject:	**Approval of Award and Execution of Contract 26-ITB-020 - Pest Control Services to Massey Services.**

Overview/Summary:
The County issued an Invitation to Bid (ITB) on July 28, 2026, via the OpenGov Procurement platform for comprehensive pest control services—including treatment for insects, rodents, and termites—across various County facilities, both interior and exterior, as well as County buses.

The County received four responses by the August 20, 2026, deadline. After reviewing all submissions for responsiveness and responsibility, one response was deemed non-responsive.

Staff recommend awarding the contract to Massey Services, Inc. of South Daytona Beach, Florida, the lowest responsive and responsible bidder. The initial contract term will be three years, with up to two optional one-year renewals. The annual cost for the initial term is $43,893.00, plus an additional $5,000.00~~0~~ for miscellaneous services as needed. Any renewals may be subject to a Consumer Price Index (CPI) adjustment or 5%, whichever is less.

Strategic Plan:
Focus Area: Effective Government

Funding Information:
Funding is included in the FY 2026-27 budget for various county departments.

Recommendations:
Staff recommends that the Board approve the bid award to Massey Services, Inc. for Pest Control Services under Invitation to Bid #26-ITB-020 in the annual amount of $43,893.00, plus an additional $5,000.00 for miscellaneous services as requested by the County. Authorize the Chair to execute a contract approved as to form by the County Attorney, and authorize the Interim County Administrator to execute any change orders or related documents.

Attachments:
1. 26-ITB-020 Contract - Pest Control Services
2. 26-ITB-020 - Bid Tabulation
3. 26-ITB-020 - Notice of Intent to Award

Flagler County Board of County Commissioners

26-ITB-020

PEST CONTROL SERVICES

This Contract, entered into October 5, 2026, by and between the Flagler County Board of County Commissioners, a political subdivision of the State of Florida, whose address is 1769 East Moody Blvd., Building 2, Bunnell, FL 32110, hereinafter called the **COUNTY**, and Massey Services, Inc., a Florida profit corporation, whose address is 1801 S. Nova Road, South Daytona, FL 32119, hereinafter called the **CONTRACTOR**.

WITNESSETH: That the **COUNTY** agrees with the **CONTRACTOR**, as follows:

A. The Contract shall consist of the following, all of which are hereby made a part hereof:

a. **COUNTY's** 26-ITB-020 Bid Documents including Addenda Nos. 1 - 2

b. **CONTRACTOR's** 26-ITB-020 Bid Submission

c. **CONTRACTOR's** Insurance Certificate(s)

B. The **CONTRACTOR** agrees to furnish all labor, equipment, material and the skill necessary for the complete work as set forth in the component parts of the Contract described herein and to the satisfaction of the **COUNTY**.

C. The **CONTRACTOR** agrees to commence the work to be done under this Contract, beginning after the award date for a period of three (3) years, with the option to renew for two (2) additional one (1) year periods if mutually agreed to in writing by the parties at least thirty (30) days prior to the expiration of the then-existing term.

D. The **COUNTY** agrees to pay the **CONTRACTOR** for the services rendered, in accordance with the pricing structure set forth in Bid Submission.

E. The total amount payable by the **COUNTY** under this Contract shall not exceed $43,893.00 per year for standard services, plus an additional not-to-exceed amount of $5,000.00 per year for miscellaneous services. The **CONTRACTOR** shall not perform work or incur costs beyond these stated amounts without prior written approval from the **COUNTY**.

F. Prices quoted shall remain firm for the initial term of the Contract. Any extension terms approved by the **COUNTY** shall be subject to cost adjustments only if documented increases or decreases have occurred within industry. Any such adjustment shall be calculated using the most recent annual percentage change in the Consumer Price Index for All Urban Consumers (CPI-U), as published by the U.S. Department of Labor, Bureau of Labor Statistics. The adjustment applied shall be the lesser of the CPI-U percentage or five percent (5%) for any extension period.

The **CONTRACTOR** shall provide documentation supporting any requested adjustment. The **COUNTY** may reject any adjustment that is insufficiently documented, excessive, or reflects an inadequate decrease. If the **COUNTY** does not accept the proposed adjustment and the parties cannot reach agreement, the Contract will expire at the end of the current term without penalty.

[SIGNATURE PAGES TO FOLLOW]

IN WITNESS WHEREOF, the parties hereto have caused this instrument to be executed by their respective officials thereunto duly authorized, this the day and year above written.

Attest:

_____

Tom Bexley, Clerk of the Circuit Court and Comptroller

FLAGLER COUNTY BOARD OF COUNTY COMMISSIONERS

_____

Leann Pennington, Chair

APPROVED-AS-TO-FORM

Sean S. Moylan Digitally signed by Sean S. Moylan Date: 2026.09.15 16:16:44 -04'00'

Sean S. Moylan, Deputy County Attorney

[THIS SPACE INTENTIONALLY LEFT BLANK; SIGNATURE PAGE TO FOLLOW.]

ATTEST:

Barbara Saucier
Signature

Barbara Saucier Office Mgr.
Print Name, Title

Massey Services, Inc.

John A Fazio
Signature

John Fazio, General Manager
Print Name, Title

Flagler County Board of County Commissioners

INVITATION FOR BID

26-ITB-020

PEST CONTROL SERVICES

RELEASE DATE: July 28, 2026
RESPONSE DEADLINE: August 20, 2026, 2:00 pm
Please refer to the project timeline in this document for all important deadlines.

Table Of Contents

1. Introduction
2. General Terms and Conditions
3. Special Terms and Conditions
4. Insurance Requirements
5. Scope of Work
6. Pricing Proposal
7. Vendor Questionnaire
8. Definitions
9. Attachments/Exhibits

Attachments:

A - Purchase Order (PO) Terms & Conditions

B - Questions & Answers Report

1. Introduction

1.1. Summary

Flagler County is soliciting competitive sealed bids from qualified vendors to provide comprehensive pest control services across various County facilities. The Contractor will furnish all labor, equipment, materials, tools, transportation, supervision, and incidentals necessary to perform interior and exterior pest control in accordance with County standards.

Services must be conducted Monday–Friday between 8:00 AM and 5:00 PM (excluding County-recognized holidays), with personnel checking in with each facility's building supervisor prior to service. Facilities must be treated at the prescribed frequency, and failure to service any location will result in a deduction equal to twice the monthly bid amount for that site.

Contractor shall provide proof of compliance with Chapter 482, Florida Statutes, including submission of the FDACS Commercial Pest Control Business License number, the name and certification number of the Certified Operator in Charge (COIC), and copies of FDACS-issued technician identification cards for all personnel performing services.

1.2. Contact Information

Kelly Bowman
Senior Procurement Analyst
1769 E Moody Blvd, Bldg 2
Bunnell, FL 32110
Email: kbowman@flaglercounty.gov
Phone: (386) 313-4096

Department:
General Services

Department Head:
Mike Dickson
Director

1.3. Timeline

Release Solicitation Date	July 28, 2026
Question Submission Deadline	August 10, 2026, 5:00pm

Final Addendum	August 13, 2026
Proposal Submission Deadline and Bid Opening	August 20, 2026, 2:00pm 3rd Floor Financial Services Conference Room 1769 East Moody Blvd Bldg. 2 Bunnell, FL 32110 Microsoft Teams meeting Join on your computer, mobile app or room device https://www.microsoft.com/en-us/microsoft-teams/join-a-meeting Meeting ID: 249 111 037 544 672 Passcode: 8SA2ec79

2. General Terms and Conditions

2.1. Instructions to Bidders

To receive consideration, entities who submit a response to this Invitation for Bid (Bidders or Contractors) must meet the minimum qualification requirements and comply with the following: Bid responses (Bids) will be accepted from single business entities, joint ventures, partnerships or corporations.

2.2. Submission of Offers

The Flagler County Board of County Commissioners ("Flagler County" or "County") is requesting bids for the service and/or product(s) detailed within this solicitation. If your company is interested in submitting a bid to provide this service and/or product(s), please provide the requested information in this solicitation, complete the included forms, and submit these documents with your response through OpenGov Procurement, at https://procurement.opengov.com/portal/flaglercounty by the date and time posted. The submission of responses prior to the specified date and time is solely and strictly the responsibility of the Bidder. Responses received after the posted date and time will not be considered. Additional information may be submitted with the response. No offer may be modified after acceptance. Terms and conditions differing from those in this solicitation may be cause for disqualification of the Response. Failure to provide the required information may result in the Response not being considered.

Do not submit confidential information, proprietary information and/or trade secrets.

2.3. Purchase Order Terms and Conditions

The County's general terms and conditions for Purchase Orders included as an exhibit with this Invitation to Bid (ITB) shall apply unless otherwise noted.

2.4. Compliance with Ordinances, Regulations, and Laws

The County reserves the right to require proof that the Bidder is an established business and is abiding by all applicable local, State, and Federal ordinances, regulations, and laws. This may include, but is not limited to, business tax receipts, business licenses, Florida sales tax registration, Federal Employers Identification Number, and/or registration with the Florida Department of State, Division of Corporations' Sunbiz website at www.sunbiz.org.

2.5. Agreement Cancellation

1. The County reserves the right to cancel any Agreement resulting from this Invitation to Bid (ITB) without cause with a minimum thirty (30) day written notice to the Contractor.
2. The Contractor may cancel the Agreement resulting from this Invitation to Bid (ITB) without cause with a minimum ninety(90) days written notice to the County.

2.6. Bidder's Responsibility

The Bidder, by submitting a Response, represents that:

1. The Bidder has read and understands the Solicitation in its entirety and that the Response is made in accordance therewith;
2. The Bidder possesses the capabilities, resources, and personnel necessary to provide efficient and successful service to the County;
3. Bidder shall submit documentation demonstrating compliance with FDACS supervision requirements, including written procedures describing how the Certified Operator in Charge supervises pest-control technicians as required under §482.091, F.S.
4. The Bidder has made all investigations and examinations necessary to ascertain site and/or local conditions and requirements affecting the full performance of the contract and to verify any representations made by Flagler County, Florida, upon which the Bidder will rely. If the Bidder receives an award because of its Response, failure to have made such investigations and examinations will in no way relieve the Bidder from its obligations to comply in every detail with all provisions and requirements of the contract, nor will a plea of ignorance of such conditions and requirements be accepted as a basis for any claim by the Bidder for additional compensation or relief; and,
5. The Bidder will be held responsible for any and all discrepancies, errors, etc., in discounts or rebates which are discovered during the Agreement term or up to and including three (3) fiscal years following the County's annual audit.

2.7. Execution of Offer

Offer shall contain a signature in the space(s) provided of a representative authorized to legally bind the Bidder to the provisions therein. All spaces requesting information from the Bidder or asking a question of the Bidder shall be completed.

2.8. Opening

Pursuant to Section 119.071, Florida Statutes, responses and the completed tabulation will be available for inspection within thirty (30) days of Solicitation opening. Contact the Office of Procurement and Contracts during regular business hours to inspect responses and the completed tabulation or go to the County's ePROCUREMENT PORTAL for inspection of the completed tabulation. The foregoing notwithstanding, if, prior to the County making responses available for inspection, the County rejects all responses and concurrently provides notice of the County's intent to reissue the solicitation, then the County may avail itself of the exemption for rejected responses set forth in Section 119.071, Florida Statutes, to the extent such Section may apply.

Solicitation openings and public meetings may be attended either in person or remotely. Solicitation openings may be accessed remotely as described in the introduction timeline section of this Solicitation.

In accordance with the American Disabilities Act and Section 286.26, Florida Statutes, persons with disabilities needing a special accommodation to participate in the proceedings, or a sign language interpreter to participate in any proceedings, should contact the Office of Procurement and Contracts at (386) 313-4008 two (2) business days before any meeting date.

2.9. Public Records Law

Pursuant to section 119.0701(2)(a), Florida Statutes, the County is required to provide Contractor with this statement and establish the following requirements as contractual obligations pursuant to the Contract:

IF THE CONTRACTOR HAS QUESTIONS REGARDING THE APPLICATION OF CHAPTER 119, FLORIDA STATUTES, TO THE CONTRACTOR'S DUTY TO PROVIDE PUBLIC RECORDS RELATING TO THIS CONTRACT, CONTACT THE CUSTODIAN OF PUBLIC RECORDS AT 386-313-4001, PUBLICRECORDS@FLAGLERCOUNTY.GOV, BY MAIL, FLAGLER COUNTY BOARD OF COUNTY COMMISSIONERS, OFFICE OF PROCUREMENT AND CONTRACTS , ATTN: ADMINISTRATION, 1769 E. MOODY BLVD, BLDG. 2, BUNNELL, FL 32110.

By entering into this Contract, Contractor acknowledges and agrees that any records maintained, generated, received, or kept in connection with, or related to the performance of services provided under, this Contract are public records subject to the public records disclosure requirements of section 119.07(1), Florida Statutes, and Article I, section 24 of the Florida Constitution. Pursuant to section 119.0701, Florida Statutes, any Contractor entering into a contract for services with the County is required to:

1. Keep and maintain public records required by the County to perform the services and work provided pursuant to this Contract.
2. Upon request from the County's custodian of public records, provide the County with a copy of the requested records or allow the records to be inspected or copied within a reasonable time at a cost that does not exceed the cost provided in Chapter 119, Florida Statutes, or as otherwise provided by law.
3. Ensure that public records that are exempt or confidential and exempt from public records disclosure requirements are not disclosed except as authorized by law for the duration of the Contract term and following completion or termination of the Contract if the Contractor does not transfer the records to the County.
4. Upon completion or termination of the Contract, transfer, at no cost, to the County all public records in the possession of the Contractor or keep and maintain public records required by the County to perform the service. If the Contractor transfers all public records to the County upon completion or termination of the Contract, the Contractor shall destroy any duplicate public records that are exempt or confidential and exempt from public records disclosure requirements. If the Contractor keeps and maintains public records upon completion or termination of the Contract, the Contractor shall meet all applicable requirements for retaining public records. All records stored electronically must be provided to the County, upon request from the County's custodian of

public records , in a format that is compatible with the information technology systems of the County.

Requests to inspect or copy public records relating to the County's Contract for services must be made directly to the County. If Contractor receives any such request, Contractor shall instruct the requestor to contact the County. If the County does not possess the records requested, the County shall immediately notify the Contractor of such request, and the Contractor must provide the records to the County or otherwise allow the records to be inspected or copied within a reasonable time.

Contractor acknowledges that failure to provide the public records to the County within a reasonable time may be subject to penalties under section 119.10, Florida Statutes. Contractor further agrees not to release any records that are statutorily confidential or otherwise exempt from disclosure without first receiving prior written authorization from the County. Contractor shall indemnify, defend, and hold the County harmless for and against any and all claims, damage awards, and causes of action arising from the Contractor's failure to comply with the public records disclosure requirements of section 119.07(1), Florida Statutes, or by Contractor's failure to maintain public records that are exempt or confidential and exempt from the public records disclosure requirements, including, but not limited to, any third party claims or awards for attorney's fees and costs arising therefrom. Contractor authorizes County to seek declaratory, injunctive, or other appropriate relief against Contractor from a Circuit Court in Flagler County on an expedited basis to enforce the requirements of this section.

2.10. Clarification, Correction of Entry, Minor Irregularities

The Flagler County Board of County Commissioners reserves the right to allow for the clarification of questionable entries and the correction of obvious mistakes. The County reserves the right to waive minor irregularities in Submittals, providing such action is in the best interest of the County. Minor irregularities are defined as those that have no adverse effect on the County's best interests and will not affect the outcome of the selection process by giving the Bidder an advantage or benefit not enjoyed by other Bidders.

2.11. Revisions, Addenda, Questions & Answers

1. It is incumbent upon each Bidder to carefully examine the specifications, scope of work/service, terms, and conditions of this Solicitation. The posting of answers through the County's ePROCUREMENT PORTAL is the only official method by which interpretation, clarification, or additional information can be given. Questions and exceptions concerning any Section of this Solicitation shall be directed through the question-and-answer section of the County's ePROCUREMENT PORTAL.

2. If it becomes necessary for the County to revise or clarify any part of this Solicitation it will be updated on the County's ePROCUREMENT PORTAL by the posting of answers to questions received and/or the revision of solicitation language/documentation. It is each Bidder's responsibility to check the County's ePROCUREMENT PORTAL for any posted answers, and/or solicitation changes. Each Bidder shall ensure that they have reviewed all questions & answers and/or changes to this

Solicitation before submitting their Response. By submitting a response, Bidders acknowledge that they have reviewed all posted answers, and/or solicitation changes prior to the posted closing date and time.

3. Each answer issued by the County shall become a material part of this Solicitation. Answers posted by the County and/or changes made to the Solicitation are authoritative and shall be considered an addendum to the Solicitation.
4. All information in this Solicitation, including information provided through the Question & Answer feature, are incorporated into the Solicitation and/or any Contract resulting from this Solicitation.
5. Questions and exceptions shall be submitted before 5:00 pm on Thursday, August 20, 2026. Thereafter, no further questions or exceptions will be accepted or reviewed by the County and Bidder's right to submit questions or exceptions will terminate and any questions or exceptions not previously made shall be deemed waived. Oral representations will not be binding on the County.

2.12. Incurred Expenses

The County has no obligation to make an award as a result of this Solicitation, nor shall the County be responsible for any cost or expense which may be incurred by any Bidder in preparing and submitting a Response, or any cost or expense incurred by any Bidder prior to the execution of a Purchase Order or Contract.

2.13. Disadvantaged Businesses

The Flagler County Board of County Commissioners has adopted policies which assure and encourage the full participation of Minority Business Enterprises (MBE), Women-owned Business Enterprises (WBE), and Veteran-owned Business Enterprises (VBE) in the provision of goods and services. The County encourages joint ventures with these businesses.

2.14. Local Vendor Preference

It is the policy of the Board that Flagler County vendors are given preference in the procurement process, unless otherwise prohibited or waived by the County Administrator.

The term Flagler County Vendor means any business: having a physical location within the boundaries of Flagler County for at least twelve (12) months immediately prior to the issuance of the request for Quotes, Bids or Proposals by the County; holding any business licenses required by the County, and/or, the municipalities, if applicable; and employing at least one (1) full time employee, or two (2) part-time employees whose primary residence is in Flagler County, or, if the business has no employees, the business shall be at least fifty (50) percent owned by one (1) or more persons whose primary residence is in Flagler County.

It is the vendor’s responsibility to request Local Vendor Preference by submitting a completed Local Vendor Affidavit with its sealed bid.

2.15. Pricing

Unless otherwise specified, prices offered shall:

- remain firm for a period of at least one hundred and twenty (120) days from the date of Solicitation opening, prior to award being made;
- include FOB Destination, all packing, handling, shipping charges and delivery to any point(s) within the County to a secure area or inside delivery (for goods);
- include all expenses necessary to provide the service at the location specified (for services).

2.16. FOB Destination

The FOB point for this contract and for all purchases made under it shall be at the project site in Flagler County, Florida. Delivery will not be complete until the using department has accepted each item. Delivery to a common carrier shall not constitute delivery to the ordering agency. All disputes arising out of shipping prior to acceptance by Flagler County shall be between the Contractor and the carrier.

2.17. Payment Terms

Unless otherwise stated in the Special Terms and Conditions, the County will remit full payment on all undisputed invoices within forty five (45) days from receipt by the appropriate person(s) (to be designated at time of contract) or receipt of all products or services ordered in accordance with the Local Government Prompt Payment Act, Part Vii, Chapter 218, Florida Statutes.

2.18. Unusual Costs

The Contractor may petition the County at any time for an additional rate adjustment on the basis of extraordinary and unusual changes in the costs of operation that could not reasonably be foreseen by a prudent operator and which, by all reasonable expectations, will continue for at least one (1) year. If the Contractor petitions for such an increase, the Contractor shall also petition for a rate reduction on the basis of extraordinary and unusual changes in the costs of operation that could not reasonably be foreseen by a prudent operator and which, by all reasonable expectations, will continue for at least one (1) year; failure to make such petition may be grounds for contract termination.

The Contractor’s request shall contain substantial proof and justification to support the need for the rate adjustment. The County may request from the Contractor, and the Contractor shall provide further information as may be reasonably necessary in making its determination. The County shall approve or deny the request, in its sole discretion, in whole or in part, within sixty (60) days of receipt of the request and all other additional information required by the County. Any price redetermination shall be solely based upon the documentation provided and the County reserves the right to rescind any price relief granted should the circumstances change, and prices go down.

2.19. Additional Terms & Conditions

The Flagler County Board of County Commissioners reserves the right to reject offers containing terms or conditions contradictory to those requested in this Solicitation.

2.20. Taxes

County is exempt from Manufacturers' Federal Excise Tax (Exemption# 59-78-0089K) and Florida sales tax (Exemption# 85-8013245979C-5). Certificates are available and can be obtained by emailing purchasing@flaglercounty.gov.

2.21. Discounts

All discounts except those for prompt payment shall be considered in determining the lowest net cost for evaluation purposes. All discounts shall remain firm for the term of the contract.

2.22. Meets/Minimum Specifications

The specifications listed in the Scope of Work are the minimum required performance specifications for this Solicitation; they are not intended to limit competition nor specify any particular Bidder, but to ensure that the County receives quality services. The Bidder represents that all offers to this Solicitation shall meet or exceed the minimum requirements specified.

2.23. Samples

When required, samples of products shall be furnished with Response to the County at no charge. Samples may be tested and will not be returned to the Bidder. The result of any and all testing shall be made available upon written request.

2.24. Silence of Specifications

The apparent silence of these specifications or any supplemental specifications as to details or the omission from same of any detailed description concerning any point, shall be regarded as meaning that only the best commercial practices are to prevail and that only materials of first quality and correct type, size, and design are to be used. All workmanship shall be first quality. All interpretations of specifications shall be made upon the basis of this statement.

2.25. Change in Scope of Work/Service

1. The County may order changes in the work/service consisting of additions, deletions, or other revisions within the general scope of the contract. No claims may be made by the Contractor that the scope of the project or of the Contractor's services has been changed, requiring changes to the amount of compensation to the Contractor or other adjustments to the contract, unless such changes or adjustments have been made by written amendment or change order to the contract signed by the County and the Contractor.

2. If the Contractor believes that any particular work/service is not within the scope of work/service of the contract, is a material change, or will otherwise require more compensation to the Contractor, the Contractor must immediately notify the County's designated representative in writing of this belief. The Contractor and County shall negotiate modifications to the contract in good faith and agree upon equitable adjustment for any changes in services or other obligations required of the Contractor due to such modifications. The Contractor must assert its right to an adjustment under this clause within thirty (30) days from the date of receipt of the written order.
3. The County reserves the right to negotiate with the awarded Contractor(s) without completing the competitive bidding process for materials, products, and/or services similar in nature to those specified within this solicitation for which requirements were not known when the Solicitation was released.

2.26. Governing Laws/Venue

This Agreement shall be interpreted and construed in accordance with and governed by the laws of the State of Florida without giving effect to any choice of law principles. Jurisdiction over, and venue for, any controversies or legal issues arising out of this contract shall be exclusively in the 7th Judicial Circuit in and for Flagler County, Florida. By entering into this contract, Contractor and County hereby expressly waive any rights either party may have to a trial by jury of any civil litigation related to the contract and it's the prevailing party in litigation shall be entitled to costs and attorney's fees.

2.27. Assignment

Contractor may not assign or otherwise convey Contractor's rights and/or obligations under the contract without obtaining County's prior written consent, which consent County may withhold, limit and/or condition in County's sole discretion, including, but not limited to, requiring the Contractor or his/her proposed successor in interest to post a performance bond. Any consent by the County under this Section shall be by written amendment to the contract in a form and substance specified by the County in its sole discretion. If Contractor desires to assign or otherwise convey its rights and/or obligations under the contract, Contractor shall, no less than thirty (30) days prior to the assignment's proposed effective date, provide County with a written request for County's consent. Failure to provide such notice may result in the County assessing a processing fee of Five Hundred Dollars (US $500.00); however, payment of such fee shall not entitle the Contractor to the County's acceptance or approval of its request for assignment.

Nothing herein shall preclude the right of the County to waive its rights under this Section, but no waiver shall be granted by the County without a written and duly executed amendment to the contract.

2.28. Content of Solicitation/Response

The contents of this Solicitation, all terms, conditions, specifications, and requirements included herein and the accepted and awarded response thereto shall be incorporated into a contract to purchase and become legally binding. Any terms, conditions, specifications, and/or requirements specific to the item or service

requested in this Solicitation shall supersede the requirements as specified in the *General Terms and Conditions* and/or *Special Terms and Conditions* section(s) of this Solicitation.

2.29. Contract

The contents of this Solicitation and all provisions of the successful bid deemed pertinent by the County shall be incorporated into a contract and become legally binding on the selected Bidder and County. The content of the contract may contain changes as a result of the Solicitation process and the content of the submittal received. The contract shall, at minimum, include the substantive terms and conditions as outlined in the Solicitation and be subject to review by the County Attorney or designee prior to approval and execution for determination of legal form and substantive sufficiency, and may contain an order of precedence and may contain those additional terms and conditions that the County deems in its best interest.

The County shall be responsible for only those orders placed by the County pursuant to the contract or on an authorized signed Purchase Order. The County shall not be responsible for any order, change substitution or any other discrepancy from the Purchase Order. If there is any question about the authenticity of a Purchase Order, contract, or change order, the Bidder should promptly contact the Office of Procurement and Contracts at (386) 313- 4008.

2.30. Disclosure of Response Content

All material submitted becomes the property of the County and may be returned only at the County's option. The County has the right to use any or all ideas presented in any reply to this Solicitation. Selection or rejection of any Response does not affect this right. Flagler County, Florida, is governed by the Public Record Law, Chapter 119, Florida Statutes.

2.31. Limitation of Liability/Indemnification

The Contractor shall indemnify, defend, and hold harmless the County including its districts, authorities, separate units of government established by law, ordinance or resolution, elected and non-elected officials, employees, agents, and volunteers, from and against all liabilities, damages, losses and costs, including, but not limited to, reasonable attorney's fees, to the extent caused by the negligence, recklessness, or intentional wrongful misconduct of the Contractor or its subcontractors, agents, employees, or any persons employed or utilized by the Contractor in the performance of the Contractor’s obligations or services under this contract.

In all claims against the County, Contractor’s indemnification obligation shall not be limited in any way by any limitation on the amount or type of damages, compensation or any benefits payable by or for Contractor, or its employees, agents, contractors, or subcontractors pursuant to Contractor's insurance. The Contractor's indemnification obligation shall survive the expiration or termination of the contract.

2.32. Payment of Subcontractors

Contractor shall save and hold the County harmless from any and all claims or actions by Contractor's subcontractor(s) for payment of monies such subcontractor claims to be owed by Contractor for Work

performed under the contract. Nothing in the contract shall create any obligation on the part of the County to pay directly to any Subcontractors any monies due for Work performed under the contract.

2.33. Sovereign Immunity

County expressly retains all rights, benefits and immunities of sovereign immunity in accordance with Section 768.28, Florida Statutes (as amended). Notwithstanding anything set forth in any section of this contract to the contrary, nothing in this contract shall be deemed as a waiver of immunity or limits of liability of the County beyond any statutory limited waiver of immunity or limits of liability which may have been or may be adopted by the Florida Legislature and the cap on the amount and liability of the County for damages, regardless of the number or nature of claims in tort, equity, or contract, shall not exceed the dollar amount set by the legislature for tort. Nothing in this contract shall inure to the benefit of any third party for the purpose of allowing any claim against the County, which claim would otherwise be barred under the doctrine of sovereign immunity or by operation of law.

2.34. Compliance with Federal E-Verify Regulations

Contractor covenants and agrees to the following provisions, as required by law:

1. If and to the extent the contract meets the criteria set forth at 48 C.F.R. § 52.222-54(e), the criteria of 48 C.F.R. § 52.222-54 are hereby incorporated by reference into this contract as if fully set forth herein.

2. Contractor and any of Contractor's Subcontractors shall register with and utilize the U.S. Department of Homeland Security's E-Verify system to verify the employment eligibility and work authorization status of all new employees hired by Contractor (or Contractor's Subcontractors) on or after the effective date of this contract and thereafter during the remaining term of the contract.

3. In the event Contractor enters into a subcontract, Contractor shall require, via written contract, the Subcontractor agree to: (i) register with and utilize the U.S. Department of Homeland Security's E-Verify system to verify the employment eligibility of all new employees hired on or after the effective date of the subcontract and thereafter during the remaining term of the subcontract; and (ii) provide Contractor with an affidavit stating that the Subcontractor does not employ, contract with, or subcontract with an unauthorized alien. Contractor shall maintain a copy of such affidavit for the duration of this contract or the subcontract, whichever is longer. Contractor shall provide a copy of such affidavit to the County before the Subcontractor begins any work associated with the contract. If the County has a good faith belief that a subcontractor knowingly violated the requirements set forth in this Section or Sections 448.09(1) or 448.095 of the Florida Statutes, but also has a good faith belief Contractor otherwise complied with this Section and applicable law, the County shall promptly notify Contractor and order Contractor to immediately terminate its contract

with the Subcontractor. Failure to comply with said order shall constitute a material breach of this contract.

4. If the County has a good faith belief Contractor has knowingly violated, or if Contractor is found to have violated, this Section; Section 448.09(1), Florida Statutes; Section 448.095, Florida Statutes; or the Presidential Executive Order and subsequent Federal Acquisition Regulation (FAR) rule requiring federal contractors to use E-Verify, if applicable, then the following shall be true: (i) such violation shall be a material breach of this contract by Contractor; (ii) Contractor shall indemnify, defend, and hold harmless the County from any resulting costs or expenses, including fines or penalties levied by a government agency and the County's loss or repayment of grant funds by breaching the requirements of this section; (iii) the County may terminate this contract immediately and without penalty and such termination shall not be or be considered a breach of this contract; and (iv) Contractor shall be liable for any additional costs incurred by the County as a result of the termination of the contract. Contractor acknowledges and understands that if the County terminates this contract in accordance with this Section, Contractor shall be ineligible for award of a public contract for at least one (1) year after the date on which the Agreement was terminated.

2.35. Public Entity Crimes

Pursuant to paragraph 287.133(2)(a), Florida Statutes, a person or affiliate who has been placed on the convicted vendor list following a conviction for a public entity crime may not submit a bid, proposal, or reply on a contract to provide any goods or services to a public entity; may not submit a bid, proposal, or reply on a contract with a public entity for the construction or repair of a public building or public work; may not submit bids, proposals, or replies on leases of real property to a public entity; may not be awarded or perform work as a contractor, supplier, subcontractor, or consultant under a contract with any public entity; and may not transact business with any public entity in excess of the threshold amount provided in section 287.017, Florida Statutes, for CATEGORY TWO for a period of thirty-six (36) months following the date of being placed on the convicted vendor list.

By entering into this contract, the Contractor represents and warrants that it is not on the convicted vendor list and not under investigation for violation of any state or federal law relating to public entity crimes. The Contractor further represents and warrants that its subcontractors and implementer, if any, are not on the convicted vendor list and not under investigation for violation of any state or federal law relating to public entity crimes.

2.36. Patents, Copyright, and Royalties

The supplier/provider, without exception, shall indemnify and save harmless Flagler County, its officers, agents, and employees from liability of any nature of kind, including cost and expenses for or on account of any copyrighted, registered, patented, or unpatented invention, process, or article manufactured or used in the provision of goods and/or services, including use by the County. If the supplier/provider uses any design,

device, or materials covered by letters, patent, copyright, or registration, it is mutually agreed and understood without exception that the quoted price shall include all royalties or costs arising from the use of such design, device, or materials in any way involved.

2.37. Use of County Logo

The County owns and retains all proprietary rights in its logos (Intellectual Property). As such, nothing in this Solicitation permits or shall be construed as authorizing Bidder to use or display County's Intellectual Property.

2.38. Training

Unless otherwise specified Bidders may be required at the convenience of, and at no expense to, the County to provide training to County personnel in the operation and maintenance of any item purchased as a result of this Solicitation.

2.39. Acceptance

Products purchased as a result of this Solicitation may be tested for compliance with specifications. Items delivered not conforming to specifications may be rejected and returned at Contractor's expense. Those items and items not delivered by the delivery date specified in accepted offer and/or purchase order may be purchased on the open market. Any increase in cost may be charged against the Contractor.

2.40. Safety Warranty

Any awarded Contractor including dealers, distributors, and/or manufacturers shall be responsible for having complied with all Federal, State, and local standards, regulations, and laws concerning the product or service specified, and the use thereof, applicable and effective on the date of manufacture or use or date in service including safety and environmental standards as apply to both private industry and governmental agencies.

2.41. Safety

The Contractor shall take the necessary precautions and bear the sole responsibility for the safety of the methods employed by the Contractor in performing the work. The Contractor shall, at all times, comply with the regulations set forth by federal, state, and local laws, rules, and regulations concerning "OSHA" and all applicable state labor laws, regulations, and standards. The Contractor shall indemnify and hold harmless the County from and against all liabilities, suits, damages, costs, and expenses (including attorney's fees and court costs) which may be imposed on the County because of the Contractor, or the failure of the Contractor's subcontractor to comply with the regulations.

2.42. Warranty

The Bidder agrees that, unless otherwise specified, the product and/or service furnished as a result of this Solicitation and award thereto shall be covered by the most favorable commercial warranty the Bidder gives to any customer for comparable quantities of such products and/or services and that the right and remedies

provided herein are in addition to and do not limit any rights afforded to the Flagler County Board of County Commissioners by any other provision of the Solicitation/offer.

2.43. Awards

Results from the evaluation committee will be considered by the Flagler County Board of County Commissioners at a regular meeting after the evaluation process. This Invitation to Bid (ITB)is issued in accordance with and shall be governed by the provisions of the County's Procurement Policy and Florida Statutes.

The Flagler County Board of County Commissioners reserves the right to make award(s) by individual sections, groups, all or none, or a combination thereof, with one or more Bidders; to reject all bids, or to waive any informality or technicality in bids received as deemed to be in the best interest of the County.

2.44. Other Agencies

All Contractors awarded contracts from this Solicitation may, upon mutual agreement, permit any local government or other governmental agency to participate in an agreement under the same prices, terms, and conditions, if agreed to by both parties.

2.45. County Facilities

County facilities are administrative facilities that provide services to the Flagler County public and any agencies that it serves. As such, activities in all buildings are critical to the provisioning of services to the public and shall not be interrupted by the Contractor's work activities.

2.46. Licenses, Certificates, and Permits

1. The County reserves the right to require proof that the Bidder is an established business and is abiding by the ordinances, regulations, and laws of their community and the state of Florida, such as but not limited to: Business Tax Receipts, business licenses, Florida sales tax registration, Federal Employers Identification Number, Registration with the Florida Department of State, and the Division of Corporations' Sunbiz at www.sunbiz.org.
2. The Bidder must be registered with the Florida Department of State Division of Corporations at www.sunbiz.org in order to provide services under the resulting contract.
3. If a license is required, the Bidder shall be licensed to perform the required work in accordance with the laws of the State of Florida and local ordinances. Bidder shall also verify that his/her subcontractors are licensed to perform the work in accordance with the laws of the State of Florida and local ordinances.
4. If applicable, the Bidder shall have a current professional registration certificate from the appropriate governing board. The Bidder must be properly registered at the time of its submittal to practice their profession in the State of Florida.

5. At time Bidder submits Response to this solicitation, Bidder shall hold the required licensure to be the prime Contractor for all work to be performed under the resulting contract. If Bidder proposes to use a Subcontractor or sub-consultant to perform any work under the resulting contract such subcontractor and/or sub-consultant shall, at the time of Solicitation submittal, hold the required licensure for all work to be performed under the resulting contract as a subcontractor and shall maintain such license(s) in full force and effect during the term of the resulting contract. All licenses and permits required to perform Contractor's duties under the resulting contract whether such license or permit is required by the federal government, State of Florida, Flagler County, or any municipality, shall be at Bidder's sole cost and expense, and shall not be a cost of the County. All required licenses and permits shall be maintained in full force and effect during the term of the resulting contract.

2.47. Records & Right to Audit

County shall have the right to audit the books, records, and accounts of Contractor and its Subcontractors that are related to the resulting contract. Contractor and its Subcontractors shall keep such books, records, and accounts as may be necessary in order to record complete and correct entries related to the resulting contract. Contractor shall preserve and make available, at reasonable times for examination and audit by the County, all financial records, supporting documents, statistical records, and any other documents pertinent to this contract for a retention period of five (5) years after completion or termination of the contract, and any renewals, as required by Item 65, General Records Schedule GS1-SL for State and Local Government Agencies, effective August 2020, and the Florida Public Records Act (Chapter 119, Florida Statutes). Contractor shall, by written Contract, require its Subcontractors to agree to the requirements and obligations of this Section. Audits will be subject to applicable privacy and confidentiality laws and regulations and Contractor's privacy and confidentiality policies and procedures.

2.48. Claim Notice

The Contractor shall immediately report in writing to the County's designated representative or agent any incident that might reasonably be expected to result in any claim under any of the coverage mentioned herein. The Contractor agrees to cooperate with the County in promptly releasing reasonable information periodically as to the disposition of any claims, including a résumé of claims experience relating to all Contractor operations at the County project site. The designated representative for the County shall be:

Flagler County Board of County Commissioners

Human Resources/Risk Management Division

Address: 1769 E. Moody Blvd., Bldg. 2

Bunnell, Florida 32110

Telephone: 386-313-4035

Fax: 386-313-4107

2.49. Waiver and Limitation of Claims

Once the contract expires, or final payment has been requested and made, the awarded Contractor shall have no more than thirty (30) calendar days to present or file any claims against the County concerning the contract. After that period, any right to claims against the County by the Contractor concerning the contract are waived.

2.50. Compliance with Laws and Regulations

The Contractor shall be responsible to know and to apply all applicable federal and state laws, all local laws, ordinances, rules, regulations (including but not limited to the following statutes: Americans with Disabilities Act (ADA),Titles I, II and III of the ADA; Federal Immigration Reform and Control Act of 1986 (as amended); and Title VII of the Civil Rights Act of 1964 (as amended), and all orders and decrees of bodies or tribunals having jurisdiction or authority which in any manner affect the work, or which in any way affect the conduct of the work. Contractor shall observe and comply with all such laws, ordinances, rules, regulations, orders, and decrees for all work or services performed under the contract. The Contractor shall indemnify, defend and hold harmless the County and all its officers, agents, servants, and employees against any liability or claim made against the County arising from, or based on, the violation of any such law, ordinance, rule, regulation, order, or decree caused or committed by Contractor, its representatives, Subcontractors, sub-consultants, professional associates, agents, servants, or employees.
Pursuant to Section 287.05701, Florida Statutes, Bidders are hereby notified that:

- The County shall not request documentation of or consider a vendors social, political or ideological interests when determining if the vendor is a responsible vendor: and
- The County may not give preference to a vendor based on the vendors social, political or ideological interests.

2.51. Scrutinized Companies-FL Statute Section 287.135 and 215.473

Contractor must certify that the company is not participating in a boycott of Israel. For contracts for goods or services of one million dollars or more, Contractor must also certify that Contractor is not on the Scrutinized Companies that Boycott Israel List, not on the Scrutinized Companies with Activities in Sudan List, and not on the Scrutinized Companies with Activities in the Iran Petroleum Energy Sector List or has not been engaged in business operations in Cuba or Syria. The County will not contract for the provision of goods or services with (i) any company participating in a boycott of Israel, and (ii) for Contracts for goods or services of one million dollars or more, any other scrutinized company as described above. Submitting a false certification shall be deemed a material breach of contract. The County shall provide notice, in writing, to the Contractor of the County's determination concerning the false certification. The Contractor shall have five (5) calendar days from receipt of notice to refute the false certification allegation. If such false certification is discovered during the active contract term, the Contractor shall have ninety (90) days following receipt of the notice to respond in writing and demonstrate that the determination of false certification was made in error. If the Contractor

does not demonstrate that the County's determination of false certification was made in error then the County shall have the right to terminate the contract and seek civil remedies pursuant to Section 287.135, Florida Statutes, as amended from time to time.

2.52. Human Trafficking Attestation Pursuant to Section 787.06, Florida Statutes

A duly authorized officer or representative of the Bidder (non-governmental entity) shall complete the included Flagler Human Trafficking Attestation Form in compliance with Section 787.06(13), Florida Statutes, (2024).

2.53. Modifications Due to Public Welfare or Change in Law

The County shall have the power to make changes in the contract as the result of changes in law and/or ordinances of Flagler County to impose new rules and regulations on the Contractor under the contract relative to the scope and methods of providing services as shall, from time to time, be necessary and desirable for the public welfare. The County shall give the Contractor notice of any proposed change and an opportunity to be heard concerning those matters. The scope and method of providing services as referenced herein shall also be liberally construed to include, but is not limited to, the manner, procedures, operations and obligations, financial or otherwise, of the Contractor. In the event any future change in Federal, State or County law or the ordinances of Flagler County materially alters the obligations of the Contractor, or the benefits to the County, then the contract shall be amended consistent therewith. Should these amendments materially alter the obligations of the Contractor, then the Contractor or the County shall be entitled to an adjustment in the rates and charges established under the contract. Nothing contained in the contract shall require any party to perform any act or function contrary to law. The County and Contractor agree to enter into good faith negotiations regarding modifications to the contract, which may be required in order to implement changes in the interest of the public welfare or due to change in law. When such modifications are made to the Agreement, the County and the Contractor shall negotiate in good faith, a reasonable and appropriate adjustment for any changes in services or other obligations required of the Contractor directly and demonstrably due to any modification in the contract under this clause.

2.54. Right to Require Performance

The failure of the County or Contractor at any time to require performance by the other of any provision hereof shall in no way affect the right of the County or Contractor thereafter to enforce same, nor shall waiver by the County of any breach of any provision hereof be taken or held to be a waiver of any succeeding breach of such provision or as a waiver of any provision itself.

In the event of failure of the Contractor to deliver services in accordance with the contract terms and conditions, the County, after due written notice, may procure the services from other sources and hold the Contractor responsible for any resulting additional purchase and administrative costs. This remedy shall be in addition to any other remedies that the County may have.

2.55. Force Majeure

Neither party shall be liable for any failure or delay in the performance of its obligations under the contract to the extent such failure or delay necessarily results from the occurrence of a Force Majeure Event beyond the control or reasonable anticipation of either party, including, but not limited to, compliance with any unanticipated government law or regulation not otherwise in effect at the time of execution of this contract, acts of God, acts of domestic or international terrorism, any virus, bacterium, or other microorganism capable of inducing physical distress, illness, or disease, whether due to a pandemic or otherwise, unforeseeable governmental acts or omissions, fires, strikes, natural disasters, wars, riots, transportation problems, and/or any other unforeseeable cause whatsoever beyond the reasonable control of the parties (and such cause being referred to as a "Force Majeure Event"). Accordingly, the parties further agree that:

1. Upon the occurrence of Force Majeure Event, the non-performing party shall be excused from any further performance of those obligations under this contract to the extent caused by the Force Majeure Event for as long as (a) the Force Majeure Event continues; and (b) the non-performing party continues to use commercially reasonable efforts to recommence performance whenever and to whatever extent possible without delay.
2. Upon the occurrence of a Force Majeure Event, the non-performing party shall notify the other party of the occurrence of such event and describe in reasonable detail the effect(s) of such event upon the party's performance of its obligations and duties pursuant to this contract. Such notice shall be delivered or otherwise communicated to the other party within three (3) business days following the failure or delay caused by the Force Majeure Event, or as soon as possible after such failure or delay if the Force Majeure Event precludes the non-performing party from providing notice within such time period.
3. In the event of a Force Majeure Event, the time for performance by the parties under the applicable statement of work shall be extended for a period of time equal to the time lost by reason of such cause through execution of a Change Order pursuant to the terms of the contract.

2.56. Contractor's Personnel

1. The Contractor shall not discriminate against any employee or applicant for employment because of race, religion, color, sex, age, handicap, or national origin, except when such condition is a bona fide occupational qualification reasonably necessary for the normal operations of the Contractor. The Contractor agrees to post in conspicuous places, visible to employees and applicants for employment, notices setting forth the provisions of this nondiscrimination clause.
2. The Contractor, in all solicitations or advertisements for employees placed by or on behalf of the Contractor, shall state that such Contractor is an Equal Opportunity Employer.
3. The Contractor shall be responsible for ensuring that its employees, agents, and subcontractors comply with all applicable laws and regulations and meet federal, state, and local requirements related to their employment and position.

4. The Contractor certifies that it does not and will not during the performance of the contract employ illegal alien workers or otherwise violate the provisions of the federal Immigration Reform and Control Act of 1986, as amended.
5. Notices, advertisements, and solicitations placed in accordance with federal law, rule, or regulation shall be deemed sufficient for the purpose of meeting the requirements of this section.
6. The Contractor shall include the provisions of the foregoing paragraphs 3.59A.-E. above, in every subcontract or purchase order so that the provisions will be binding upon each Contractor.
7. The Contractor and any Subcontractor shall pay all employees working on this contract not less than minimum wage specified in the Fair Labor Standards Act (29 CFR 510-794) as amended.
8. The Contractor shall not disclose any information concerning the County, its products, services, personnel, policies, or any other aspect of its business learned by the Contractor or personnel furnished by the Contractor in the course of providing services pursuant to the contract which are not otherwise known to the general public.
9. Both Contractor and Subcontractors awarded a contract as a result of Local Preference, shall register all open positions related to this contract with the Center for Business Excellence (CBE), and submit appropriate affidavit showing compliance.

2.57. County/Contractor Relationship

1. Any awarded contractor shall provide the services required herein strictly under a contractual relationship with the County and is not, nor shall be, construed to be an agent or employee of the County. As an independent contractor, the awarded Contractor shall pay any and all applicable taxes required by law; shall comply with all pertinent Federal, State, and local statutes including, but not limited to, the Fair Labor Standards Act, the Americans with Disabilities Act, the Federal Civil Rights Act, and any and all relevant employment laws. The Contractor shall be responsible for all income tax, FICA, and any other withholdings from its employees' or Subcontractor’s wages or salaries. Benefits for same shall be the responsibility of the Contractor including, but not limited to, health and life insurance, mandatory Social Security, retirement, liability/risk coverage, and workers' and unemployment compensation.
2. The Contractor shall hire, compensate, supervise, and terminate members of its work force; shall direct and control the manner in which work is performed including conditions under which individuals will be assigned duties, how individuals will report, and the hours individuals will perform.
3. The Contractor shall not be provided special space, facilities, or equipment by the County to perform any of the duties required by the contract, nor shall the County pay for any business,

travel, or training expenses or any other contract performance expenses not explicitly set forth in the specifications.

4. The Contractor, except as expressly set forth herein, shall not be exclusively bound to the County and may provide professional services to other private and public entities as long as it is not in direct conflict and does not provide a conflict of interest with the services to be performed for the County.

2.58. Disqualification of Bidders

1. Only one (1) Response from an individual firm, partnership or corporation under the same or under a different name will be considered. If a Bidder submitted more than one (1) Response for the work involved, all Responses submitted from such Bidder will be rejected.
2. Collusion among Bidders: If it is believed that collusion exists among the Bidders, the Responses of all participants in such collusion shall be rejected and no participants in such collusion will be considered in future bids for the same work.

2.59. Debarment: Purpose and Intent

The County endeavors to solicit offers from, award contracts to, and consent to subcontracts with responsible vendors and contractors only. To further this policy, the County asserts its authority to debar certain vendors and contractors from participating in solicitations pursuant to the policies and procedures herein. The serious nature of debarment requires that this sanction be imposed only when it is in the public interest for the County's protection and not for purposes of punishment. Debarment is intended as a remedy in addition to, and not in substitution of, the evaluation of the responsibility of County vendors and contractors, and this policy and the procedures provided for herein shall not supplant or supersede County's authority to reject or otherwise terminate vendors or contractors based on findings of non-responsibility on a case-by-case basis.

2.60. Unit Prices and Interpretation

For the purpose of this Solicitation and evaluation of responses hereto the following shall apply:

Unit prices shall prevail over extended prices; written matter shall prevail over typed matter; numbers spelled in word form shall prevail over Arabic numerals ("one" over "1"). When not inconsistent with context words used in the present tense include the future, words in the plural number include the singular number, and words in the singular number include the plural number. The word "shall" is always mandatory and not merely directory.

2.61. Dispute Resolution

1. Good Faith Efforts to Resolve. The parties to this contract shall exercise their best efforts to negotiate and settle promptly any dispute that may arise with respect to this contract in accordance with the provisions set forth herein prior to initiating litigation. The Contractor and

County Project Manager shall use reasonable efforts to arrange personal meetings and/or telephone conferences as needed, at mutually convenient times and places, to address and work toward resolution of issues that arise in performance of this contract. Issues shall be escalated to successive management levels as needed.

2. Informal Dispute Resolution. If a dispute develops between the parties concerning any provision of this contract, or the interpretation thereof, or any conduct by the other party under these contracts, and the parties are unable to resolve such dispute within five (5) business days, that party, known as the Invoking Party, through its applicable Project Manager, shall promptly bring the disputed matter to the attention of the non-Invoking Party's Project Manager or designated representative, as the case may be, of the other party in writing ("Dispute Notice") in order to resolve such dispute.

3. Discovery and Negotiation / Recommended Procedures. Upon issuance of a Dispute Notice, the Project Managers or designated representative shall furnish to each other all non-privileged information with respect to the dispute believed by them to be appropriate and germane. The Project Managers or designees shall negotiate in an effort to resolve the dispute without the necessity of any formal proceeding. If such dispute is not resolved by the Project Managers or designees within five (5) County Work Days of issuance of the Dispute Notice, or such other time as may be mutually allowed by the Project Managers or designees as being necessary given the scope and complexity of the dispute, the Project Managers or designees may, depending upon the nature, scope, and severity of the dispute, invoke formal dispute resolution procedures below.

4. Formal Dispute Resolution. At any point after issuance of a Dispute Notice under this section, either party may request and initiate formal non-binding mediation before a single mediator, which mediation shall be completed within thirty (30) days of initiation or such longer time as may be agreed upon by both parties as being necessary for the mutual selection of a mediator and scheduling of such mediation. Any such mediation shall be convened and conducted in accordance with the rules of practice and procedure adopted by the Supreme Court of Florida for court-ordered mediation, Rule 1.700 et seq. of the Florida Rules of Civil Procedure, and Chapter 44, Florida Statutes. The parties shall split the cost of the mediator and bear their own attorney's fees and other costs for the mediation. If the dispute remains unresolved after conducting such mediation, then either party may proceed to finalize any pending termination remedies and commence litigation in a court of competent jurisdiction.

5. Right to Terminate Reserved. Regardless of the dispute resolution procedures provided for in this Section, nothing herein shall affect, delay, or otherwise preclude a party from terminating this contract in accordance with the provisions of Special Conditions, Termination, it being understood that these dispute resolution procedures are intended as a means of resolving disputes both during the term of this contract and after termination or expiration thereof.

2.62. Authorized Signatory

Bidder acknowledges that the name and title of the signatory (the "Authorized Signatory"), as completed, is authorized to execute contracts/agreements with Flagler County, and that submitting a Response via the County's ePROCUREMENT PORTAL shall be the act of and attributable to the Authorized Signatory to bind the company. By submitting this Response electronically, the Authorized Signatory does thereby adopt the electronic or conformed submittal as authorized firm commitment and for use as an official record by Flagler County.

2.63. Revisions, Addenda, Questions & Answers

All answers to questions of substance will be publicly published via the County's ePROCUREMENT PORTAL, Question & Answer feature.

Participants are required to review all revisions and answers to questions published. Revisions within the Solicitation as well as responses posted through the Question & Answer feature are authoritative and shall be considered an addendum to the Solicitation. All information in this Solicitation, including information provided through the Question & Answer feature are incorporated into the Solicitation or any Contract resulting from this Solicitation.

2.64. Acknowledgement of Solicitation Tabulation

All responses accepted by Flagler County are subject to the County's Terms and Conditions. Any and all additional Terms and Conditions submitted by Bidder(s) are rejected and shall have no force and effect. Responses from the Bidder(s) listed on the tabulation are the only responses received timely as of the closing date and time. All other responses submitted in response to the solicitation, if any, are rejected as late.

2.65. Availability of Personnel

Personnel described in the bid shall be available to perform the services as described. All personnel shall be the employees, or agents of the Bidder, and not employees or agents of Flagler County.

2.66. Assignment of Contract

The selected Bidder may not make any assignments of their obligations resulting from this Invitation to Bid (ITB)without the prior written authorization of Flagler County.

2.67. Gratuities and Kickbacks

It is prohibited for the Contractor or any agent acting at the behest of the Contractor to offer, give, or agree to give any Flagler County employee or former Flagler County employee, or for any Flagler County employee or former Flagler County employee to solicit, demand, accept, or agree to accept from another person, a gratuity or an offer of employment in connection with any decision, approval, disapproval, recommendation, or preparation of any part of a program requirement or a purchase request, or to influence the content of any

specification or procurement standard, render advice, investigate, audit, or act in any other advisory capacity to the County.

It shall be unethical for any payment, gratuity, or offer of employment to be made by or on behalf of a subcontractor under a contract to the prime contractor or higher tier sub-contractor or any person associated therewith, as an inducement for the award of a subcontract or order.

2.68. Drug-Free Workplace Certification

By submitting a bid in response to this Invitation to Bid (ITB), Contractor certifies that Contractor's company is a drug-free workplace in accordance with Florida Statute 287.087.

2.69. Proprietary/Restrictive Specifications

Prospective Bidders, who feel the specifications contained herein are proprietary or restrictive in nature, thus potentially resulting in reduced competition, must contact the Office of Procurement and Contracts upon receipt of this Invitation to Bid (ITB) and prior to bid opening. Specifications which are unrelated to performance will be considered for deletion via addendum to this Invitation to Bid (ITB).

2.70. Certification of Independent Price Determination

By submission of this bid, the Bidder certifies, and in the case of a joint bid each party thereto certifies as to its own organization, that in connection with this procurement:

A. The prices in this bid have been arrived at independently, without consultation, collusion, communication, or agreement for the purpose of restricting competition, as to any matter relating to such prices with any other Bidder or with any competitor.

B. Unless otherwise required by law, the prices which have been quoted in this bid have not been knowingly disclosed by the Bidderand will not knowingly be disclosed by the Bidder prior to opening, directly or indirectly to any other Bidder or to any competitor; and,

C. No attempt has been made or will be made by the Bidder to induce any other person or firm to submit or not to submit a bid for the purpose of restricting competition.

2.71. Employment of Former Flagler County Employees By Any Person, Business, Or Organization Contracting With Flagler County

It shall be a violation for any person, business or organization contracting with Flagler County to employ in any capacity, any former Flagler County employee or member of Flagler County employee's immediate family within one year of that employee's separation from employment with the County, unless the employer or the former County employee files with the County Clerk, the County's Employment Disclosure Statement . The penalty for this violation may include disqualification of the bid submission.

3. Special Terms and Conditions

3.1. Closing Date

Invitation to Bid (ITB): Closing Date
Response must be received through the County's eProcurement Portal before 2:00 pm on Thursday, August 20, 2026. Responses received after this time will not be considered.

3.2. Authorized Official

The Invitation to Bid (ITB) response and all required forms must be submitted/signed by an official authorized to legally bind the Respondent to all Invitation to Bid (ITB) provisions. A Memorandum of Authority may be submitted to document that the individual is authorized to commit the firm to a contract.

3.3. Definition of Responsive and Responsible for this Solicitation

Each Response shall be evaluated for conformance as responsive and responsible using the following criteria:

A. Proper submittal of ALL documentation as required by this Invitation to Bid (ITB). (Responsive)

B. The greatest benefits to Flagler County as it pertains to: (Responsible)

1. **Total Cost;**
2. **Delivery;**
3. **Past Performance. In order to evaluate past performance, all Respondents are required to submit a list of three (3) references that are the same or similar in magnitude to this Solicitation. Flagler County shall not be listed as a reference;**

Financial Stability: All Respondents shall be prepared to supply a financial statement upon request, preferably a certified audit of the last available fiscal year.

Respondents are reminded that award may not necessarily be made to the lowest Response. Rather, award will be made to the **lowest responsive, responsible** Bidder whose Bid **meets all specifications and terms** of this ITB.

3.4. Local Preference Availability

This project is not funded by monies that prohibit the local preference provision and local preference does apply per the General Terms and Conditions section Local Preference.

3.5. Payment Terms

1. The County will remit full payment on all undisputed invoices within forty five (45) days from receipt by the appropriate person(s) (to be designated at time of Agreement) of the invoice(s) or receipt of all products or services ordered.

2. Pursuant to Chapter 218.74, Florida Statutes, the County will pay interest not to exceed one percent (1%) per month on all undisputed invoices not paid within forty-five (45) days after the due date.

By submitting a Response to Flagler County, the Respondent expressly agrees that, if awarded an Agreement, the County may withhold from any payment monies owed by the Respondent to the County for any legal obligation between the Respondent and the County, including, but not limited to, real property taxes, personal property taxes, fees, and commissions.

3.6. Award Term

The County is looking to promote partnership relationships within the policies and procedures of public procurement. Pursuant toward that end, the successful Respondent shall be awarded an Agreement for an initial three (3) year term with the option for two (2) subsequent one (1) year renewals. All renewals will be contingent upon mutual written agreement and, when applicable, approval of the Board of County Commissioners.

3.7. Termination

A. County may terminate this Agreement upon written notice to the Contractor at least thirty (30) days prior to desired termination date.

B. Awarded Respondent may terminate this Agreement upon written notice to the County at least ninety (90) days prior to desired termination date.

C. Upon receipt of notice of termination by the County from awarded Respondent or upon delivery of notice of termination from the County to Contractor, awarded Respondent shall:

1. Stop work under the Agreement on the date and to the extent specified in County's Notice of Termination;

2. Inform County of the extent to which performance is completed;

3. Place no further orders or subcontracts for materials, services or facilities except as may be necessary for completion of such portion of the Work/Services under the Agreement as is not terminated and with the prior approval of the County; and,

4. Assign to the County, in the manner, at the times, and to the extent directed by the County, all of the rights, title, and interest of the awarded Respondent under the orders and subcontracts so terminated.

D. For all undisputed outstanding invoices submitted to the County prior to the effective date of the termination and subject to Section Award Term, Section Payment Terms and this Section, Termination, the County shall cause payments to be made to awarded Respondent within forty-five (45) days of receipt of invoice. Awarded Respondent shall invoice the County for any sums awarded Respondent

claims to be owed by County under this Agreement for work performed from the last invoice to the effective date of termination. County shall review such invoice for payment and County shall pay any undisputed amount within forty-five (45) days.

E. With the approval of the County and to the extent required by the County, the awarded Respondent shall, upon termination, settle all outstanding liabilities and all claims arising out of such termination. County's approval of such settlements shall be final for all the purposes of a termination under this Section, Termination. In addition, awarded Respondent shall transfer title and deliver to the County, in the manner, at the times, and to the extent, if any, directed by the County, Deliverables, work-in-progress, reports, models, studies, and other materials produced as a part of, or acquired in connection with the performance of the Work/Services terminated.

F. If awarded Respondent fails to cure a breach within ten (10) calendar days after receipt of notice from the County of said breach, the County may take over the Work/Services and complete the Work/Services, and the awarded Respondent shall be liable to the County for any increased cost of the Project reasonably incurred by the County to complete the awarded Respondent's unfinished Work/Services. As such, the County may apply unpaid Compensation due and owing to the awarded Respondent prior to the default as a set off against the costs incurred by the County for taking over such Work/Services.

G. The right of termination provided to the County and the awarded Respondent herein shall be cumulative of all other remedies available at law.

H. All provisions of this Agreement which impose or contemplate continuing obligations on a party will survive the expiration or termination of this Agreement.

3.8. Damages

Due to the nature of the services to be provided and the potential impact to the County for loss, the awarded Respondent cannot disclaim consequential or special damages related to the performance of this Agreement. The awarded Respondent shall be responsible and accountable for any and all damages, directly or indirectly, caused by the actions or inaction of its employees, staff, or Subcontractors. There are no limitations to this liability.

3.9. Proposal Acceptance/Rejection

The County reserves the right to accept or reject any or all proposals received as a result of this Solicitation, or to negotiate separately with competing Respondents, and to waive any informalities, defects, or irregularities in any proposal, or to accept that proposal or proposals, which in the judgment of the proper officials, is in the best interest of the County.

3.10. Proposal Acceptance Period

Any Proposal in response to this Invitation to Bid (ITB) shall be valid through December 11, 2026. At the end of this time the proposal may be withdrawn at the written request of the Respondent if no award has been made. If the Proposal is not withdrawn at that time it remains in effect until an award is made or the solicitation is canceled regardless of the status of the proposal bond. The County reserves the right to request an extension of the proposals if a Contract has not been executed by December 11, 2026.

3.11. Advertisement

This solicitation is posted on the County's publicly accessible website/eProcurement portal in accordance with County Procurement Policy.

3.12. Pest Control Licensing Requirements

Contractor must maintain an active FDACS Commercial Pest Control Business License throughout the contract term. Contractor shall provide:

- FDACS license number
- COIC name and certification category (GHP required)
- Copies of technician ID cards
- Written supervision plan compliant with §482.091, F.S.

3.13. Pesticide Storage & Transport

Contractor shall comply with FDACS requirements for pesticide storage and transport, including locked compartments, spill kits, proper labeling, and separation of incompatible materials.

3.14. Spill Response & Emergency Procedures

Contractor shall maintain spill-response procedures including emergency contacts, containment methods, reporting requirements, and cleanup protocols consistent with FDACS and EPA guidelines.

3.15. Consumer Notification & Signage

Contractor shall comply with §§482.2265–482.2267, F.S., including posting signage for exterior treatments, maintaining notification registries, and providing advance notice for sensitive areas.

3.16. Environmental Protection & Drift Control

Contractor shall implement drift-control measures for exterior pesticide applications, including buffer zones, weather-condition restrictions, and stormwater protection procedures.

4. Insurance Requirements

4.1. Required Types of Insurance.

The Contractor shall purchase and maintain at its own expense, during the term of the Agreement, the types and amounts of insurance with limits no less than those shown in the Required Types and Limits of Insurance Chart associated with this solicitation, in the form and from companies satisfactory to the County. The Required Types and Limits of Insurance Chart is a listing and general summary of insurance policies required and is not intended to be comprehensive as to the requirements of each specific policy. Contractors shall review the additional requirements in this section and ensure that the insurance policies comply with the specific terms and conditions therein.

For the purposes of indemnification of the County or an endorsement or insurance coverage under this Agreement/Contract under which the County is a “named insured”, “additional named insured”, or “additional insured”, the term “County” includes Flagler County (a body corporate and politic and a subdivision of the State of Florida), including its elected and non-elected officials, employees, agents, volunteers, and any party with whom the County has agreed by contract to provide additional insured status.

The policy limits for all required policies in the Required Types and Limits of Insurance Chart below shall apply separately from one another and shall not be shared with any other coverage line or reduce the aggregate limit of any other insurance coverage form required.

Regardless of anything submitted as proof of insurance, Contractor shall comply with all requirements as stated in the Solicitation and/or Contract documents.

4.2. Subcontractors and Independent Contractors.

All subcontractors & independent contractors utilized by Contractor to provide services to County and its employees under this Agreement/Contract shall be required to maintain all insurance policies with the same terms, conditions, and requirements required of the Contractor in the Required Types and Limits of Insurance Chart and described in this Solicitation.

4.3. Claims Made Basis Insurance Policies.

All insurance policies written on a Claims Made Form shall maintain a retroactive date prior to or equal to the effective date of the Agreement. The Contractor shall purchase a Supplemental Extended Reporting Period (“SERP”) with a minimum reporting period of not less than three (3) years in the event the policy is canceled, not renewed, switched to occurrence form, or any other event which requires the purchase of a SERP to cover a gap in insurance for claims which may arise under or related to the Agreement. The Contractor’s purchase of the SERP shall not relieve the Contractor of the obligation to provide replacement coverage. In addition, the Contractor shall require the carrier immediately inform the Contractor, the County Risk Manager, and the Office of Procurement and Contracts of any contractual obligations that may alter its professional liability coverage under the Agreement.

4.4. Risk Retention Groups and Pools.

Contractor shall not obtain an insurance policy required under this Agreement from a Risk Retention Group or Pool.

4.5. Minimum Required Policies and Limits.

Minimum underlying policies, coverages, and limits shall include all policies listed in the Required Types and Limits of Insurance Chart below.

4.6. Additional Insured, Policies, Coverages, Limits, Primary and Non-Contributory Basis.

Under all insurance policies where the County is required to be an additional insured, the coverage and limits provided to the County under Contractor's insurance policies shall be that listed in the Required Types and Limits of Insurance Chart or the Contractor's actual limits, whichever is higher. All coverage provided to the County as an additional insured by said policies shall be primary and shall not be additional to or contributing with any other insurance or self-insurance maintained by the County or any other insurance contractually available for the benefit of the County. Contractors performing construction projects shall utilize ISO Forms CG 20 38 and CG 20 37, or their equivalents to provide additional insured status to the County and any party to whom the County is contractually bound to provide additional insured status under a commercial general liability policy.

4.7. Disposal of Materials.

If the services provided require the disposal of any hazardous or non-hazardous materials off the job site, the disposal site operator must furnish a certificate of insurance for Pollution Legal Liability with coverage for bodily injury and property damage for losses that arise from the facility that is accepting the waste under the Agreement.

4.8. Workers' Compensation.

Workers' Compensation insurance is required for all employees of the Contractor, employed or hired to perform or provide work or services under the Agreement or that is in any way connected with work or services performed under the Agreement, without exclusion for any class of employee, and shall comply fully with the Florida Workers' Compensation Law (Chapter 440, Florida Statutes, Workers' Compensation Insurance) and include Employers' Liability Insurance with limits no less than the statutory amount. Policy shall be endorsed with NCCI form WC 00 03 13 providing a waiver of subrogation in favor of the County. If Contractor is using a "leased employee" or an employee obtained through a professional employer organization ("PEO"), Contractor is required to have such employees covered by worker's compensation insurance in accordance with Florida Worker's Compensation law. The PEO shall endorse its workers compensation policy with NCCI form WC 00 03 13 providing a waiver of subrogation in favor of the County, its employees and insurers.

(1) Contractor and its Subcontractors, or any associated or subsidiary company doing work on County property or under the Agreement must be named in the Workers' Compensation coverage or provide proof of their own

Workers' Compensation coverage, without exclusion of any class of employee, and with a minimum of the statutory limits per occurrence for Employer's liability coverage. Further, if the Contractor's Subcontractors fail to obtain Workers' Compensation insurance and a claim is made against the County by the uncovered employee of said Subcontractor of the Contractor, the Contractor shall indemnify, defend, and hold harmless the County from all claims for all costs including attorney's fees and costs arising under said employee(s) Workers' Compensation insurance claim(s).

4.9. Commercial General Liability Insurance.

The Contractor shall obtain and maintain Commercial General Liability insurance, with limits of not less than the amounts shown in the Required Types and Limits of Insurance Chart. Contractor shall not obtain an insurance policy wherein the policy limits are reduced by defense and claim expenses. Such insurance shall be issued on an occurrence basis and include coverage for the Contractor's operations, independent contractors, and Subcontractors protecting itself, its employees, agents, Contractors or subsidiaries, and their employees or agents for claims for damages caused by bodily injury, property damage, or personal or advertising injury, and products liability/completed operations including what is commonly known as Coverages A and B. Such policies shall include coverage for claims by any person as a result of actions directly or indirectly related to the employment of such person or entity by the Contractor or by any of its Subcontractors arising from work or services performed under the Agreement. Policy shall include either contractual insurance or a designated contract contractual liability coverage endorsement, indicating expressly the Contractor's Agreement to indemnify, defend and hold harmless the County as provided in the Agreement. The commercial general liability policy shall provide coverage to County when it is required to be named as an additional insured either by endorsement or pursuant to a blanket additional insured endorsement, for those sources of liability which would be covered by the latest edition of the standard Commercial General Liability Coverage Form (ISO Form CG 00 01), as filed for use in the State of Florida by the Insurance Services Office, without the attachment of any endorsements excluding or limiting coverage for Bodily Injury, Property Damage, Products/Completed Operations, Independent Contractors, Property of County in Contractor's Care, Custody or Control or Property of County on which contracted operations are being performed, Explosion, Collapse or Underground hazards (XCU Coverage, Contractual Liability or Separation of Insureds.

For construction related projects, County shall be added as additional insured to Contractor's policy by both ISO Endorsements CG 20 38 (Premises & Operations) and CG 20 37 (Products & Completed Operations) or their equivalents. If County has agreed by separate contract to require Contractor to name another party as an additional insured, Contractor shall add said party as an additional insured to the commercial general liability policy by ISO Endorsement CG 20 38 and CG 20 37, or their equivalents.

For non-construction projects, Contractor shall add County as additional insured by both ISO Endorsements CG 20 10 (Premises & Operations) and CG 20 37 (Products & Completed Operations) or their equivalent. If County has agreed by separate contract to require Contractor to name another party as an additional insured, Contractor shall add said party as an additional insured to the commercial general liability policy by both ISO Endorsement CG 20 10 and CG 20 37 or their equivalents.

All commercial general liability policies shall be endorsed to provide a waiver of subrogation in favor of the County and any other party required by this Agreement to be named as an additional insured.

4.10. Motor Vehicle Liability.

The Contractor shall secure and maintain during the term of the Agreement a motor vehicle liability policy with a combined single limit of no less than the amounts shown in the Required Types and Limits of Insurance Chart for bodily injury and property damage arising from the ownership, maintenance, or use of a motor vehicle. Policy shall be written with Coverage Symbol 1 (Any Auto), providing coverage for all autos operated regardless of ownership, or with Coverage Symbols 7, 8, & 9 (Scheduled, Hired, & Non-Owned vehicles). The County shall be an additional insured under this policy when required in the Required Types and Limits of Insurance Chart. If Motor Vehicle Liability is by endorsement to another policy required in the Required Types and Limits of Insurance Chart, then the limits for Motor Vehicle Liability shall be separate (they shall not be shared) and in addition to the underlying policy limits. If endorsed to another policy required in the Required Types and Limits of Insurance Chart, Motor Vehicle Policy Limits shall apply on a per occurrence basis and shall not have an aggregate limit.

4.11. Pollution Liability.

The Contractor shall obtain and maintain a pollution liability insurance policy with a limit of liability of no less than the amount(s) shown above on a per occurrence/aggregate basis for any work or services performed under the Agreement including but not limited to environmental/pollution related services, testing, design, consulting, analysis, other consulting work (whether self-performed or subcontracted), discharge, dispersal, release, seepage, migration or escape of smoke, vapors, soot fumes, acids, alkalis, toxic chemicals, liquid or gasses, waste materials, irritants, contaminants, pollutants into or upon land, atmosphere or any watercourse or body of water (including groundwater at or under or emanating arising from work or services performed under the Agreement) and for all above-ground storage tanks, in-ground storage tanks, and other potentially hazardous materials. Policy shall insure for the Contractor's liability for bodily injury, sickness, disease, mental anguish, or shock sustained by any person, including death, property damage including physical injury to or destruction of tangible property including the resulting loss of use thereof, clean-up costs, and the loss of use of tangible property that has not been physically injured or destroyed; defense including costs, charges and expenses incurred in the investigation, adjustment or defense of claims for such compensatory damages; coverage for losses caused by pollution conditions that arise from Contractor's operation, and environmental damage resulting from sudden accidental and gradual pollution and related cleanup costs incurred by the Contractor. If Agreement involves the use, storage, removal, or remediation of naturally occurring hazardous substances (including, but not limited to: mold, asbestos, lead, mercury, arsenic, radon, silica, pyrite), the policy shall be endorsed to remove any exclusion(s) for the substance. The County shall be named as additional insured.

4.12. Primary and Excess Coverage.

Any insurance required may be provided by primary and excess insurance policies.

4.13. General Insurance Requirements.

A. All insurance policies shall be issued by insurers licensed and/or duly authorized under Florida Law to do business in the State of Florida and all insuring companies are required to have a minimum rating of A- and a Financial category size of VIII or greater in the "Best Key Rating Guide" published by A.M. Best & Company, Inc.

B. Approval by County of any policy of insurance shall not relieve Contractor from its responsibility to maintain the insurance coverage required herein for the performance of work or services by the Contractor or its Subcontractors for the entire term of the Agreement and for such longer periods of time as may be required under other clauses of the Agreement.

C. **Waiver of Subrogation**. The Contractor hereby waives all rights against the County and its Subcontractors for damages by reason of any claim, demand, suit or settlement (including workers' compensation) for any claim for injuries or illness of anyone, or perils arising out of the Agreement. The Contractor shall require similar waivers from all its Subcontractors. Contractor's insurance policies shall include a waiver of subrogation in favor of the County. This provision applies to all policies of insurance required under the Agreement (including Workers' Compensation, and general liability).

D. **County Not Liable for Paying Deductibles**. For all insurance required by Contractor, the County shall not be responsible or liable for paying deductibles for any claim arising out of or related to the Contractor's business or any Subcontractor performing work or services on behalf of the Contractor or for the Contractor's benefit under the Agreement.

E. **Cancellation Notices**. During the term of the Agreement, Contractor shall be responsible for promptly advising and providing the County Risk Manager and the Office of Procurement and Contracts with copies of notices of cancellation or any other changes in the terms and conditions of the original insurance policies approved by the County under the Agreement within two (2) business days of receipt of such notice or change.

F. **Deductibles and Self-Insured Retentions**.

1. Contractors that maintain and administer a self-insured retention or a large deductible formal program exceeding the insurance requirements listed in the Required Types and Limits of Insurance Chart to fund either program may submit an exception request in accordance with the solicitation section detailing Revisions, Addenda, Questions & Answers to be considered for this solicitation. The request must include a summary of the program's design and funding method to manage fund deductibles or self-insured retentions. If additional information is necessary, the County will request more specific information, which must be provided by the Contractor. The County Risk Manager will review the information submitted and determine whether the program is acceptable to the County.

2. Contractors with no formal risk management program in place to manage and fund deductibles or self-insured retentions may not be considered.

3. Subject to County approval, Contractor may obtain a letter of credit in the amount equivalent to the deductible, which shall remain in effect during the term of the Agreement at no additional cost to the County.

G. Contractor's obligations or services shall not be construed to negate, abridge, or reduce other rights or obligations of indemnity or insurance defense of additional or named insureds which would otherwise exhaust or be unavailable as to a party or person described in this Contract.

4.14. Proof of Insurance.

A. The Contractor shall be required to furnish evidence of all required insurance in the form of certificates of insurance, which shall clearly outline all hazards covered as itemized herein, the amounts of insurance applicable to each hazard and the expiration dates.

B. The Contractor shall furnish proof of insurance acceptable to the County prior to or at the time of execution of the Agreement and the Contractor shall not commence work or provide any service until the Contractor has obtained all the insurance required under the Agreement and such insurance has been filed with and approved by the County. Upon request from the County, the Contractor shall furnish copies of all required policies and any changes, endorsements, or amendments thereto, immediately, to the County, the County Risk Manager, and Purchasing and Contracts Divisions, prior to and any time after the commencement of any contractual obligations. The Agreement may be terminated by the County, without penalty or expense to County, if at any time during the term of the Agreement proof of any insurance or copies of any insurance policies required hereunder are not provided to the County upon request.

C. All certificates of insurance shall clearly indicate that the Contractor has obtained insurance of the type, amount and classification required by this Section. No work or services by Contractor or its Subcontractors shall be commenced until County has approved these policies or certificates of insurance. Further, the Contractor agrees that the County shall make no payments pursuant to the terms of the Agreement until all required proof or evidence of insurance has been provided to the County. The Agreement may be terminated by the County, without penalty or expense, if proof of any insurance required hereunder is not provided to the County.

D. The Contractor shall file replacement certificates with the County at the time of expiration or termination of the required insurance occurring during the term of the Agreement. In the event such insurance lapses, the County expressly reserves the right to renew the insurance policies at the Contractor's expense or terminate the Agreement but County has no obligation to renew any policies.

E. The provisions of these sections, Required Types of Insurance; Insurance Requirements; and Proof of Insurance, shall survive the cancellation or termination of the Agreement.

4.15. Provide Proof of Insurance.

Provide Proof of Insurance - evidence of required insurance coverage or proof of insurability in the amounts indicated. If available, a properly completed ACORD Form is preferable. Upon award, final forms must contain the correct solicitation and/or project number and Flagler County contact person.

Firms that have owner/operators that have filed a "Notice of Election to be Exempt" shall submit a copy of the notice with the response.

4.16. Insurance Requirement

Before execution of the Agreement by the County and commencement of the operations and/or services to be provided, and during the duration of the Agreement, the Contractor shall file with the County current certificates of all required insurance on forms acceptable to the County, which shall include the following provisions:

A. All insurance policies shall be issued by companies authorized to do business under the laws of the State of Florida and acceptable to the County.

B. The Certificates shall clearly indicate that the Contractor has obtained insurance of the type, amount and classification as required for strict compliance with this insurance section.

C. No material change or cancellation of the insurance shall be effective without thirty (30) days prior written notice to the County.

The Contractor shall require and ensure that each of its subcontractors providing services here under (if any) procures and maintains, until the completion of the services, insurance of the types and to the limits specified herein.

Coverage Required – Unless otherwise specified, the Contractor shall, at its sole expense, maintain in effect at all times during the performance of the services insurance coverage with limits not less than those set forth below and with insurers and under forms of policies satisfactory to County.

Coverage

Minimum Amounts and Limits

- Worker's Compensation
  - Statutory requirements at location of Work
- Employer's Liability
  - $ 1,000,000 each occurrence

- $ 1,000,000 disease, aggregate
- $ 1,000,000 disease, each employee

- Commercial General Liability
  - $ 2,000,000 General Aggregate
  - $ 2,000,000 Products-Comp. Ops Aggerate
  - $ 1,000,000 Each Occurrence
  - $ 500,000 Fire Damage
  - $ 0 Medical Expense

- Automobile Liability
  - $ 1,000,000 Combined Single Limit (owned, hired and non-owned)
  - Option of Split Limits:
    - Bodily Injury
      - $ 1,000,000 per Person
      - $ 1,000,000 per Accident
    - Property Damage
      - $ 1,000,000

Insurance carrier(s) must have a minimum financial rating of A-.

Coverage shall apply to the indemnity provided to Flagler County and shall include Flagler County its officers and employees, as additional insureds, not including Worker's Compensation coverage, as regards to liability arising out of the Contractor's performance of the work or the work performed by others on behalf of the Contractor under this Agreement. The insurance afforded to the County shall state that it is primary insurance and shall provide for a severability of interest or cross-liability clause. Prior to entering into the Agreement with the County, the Contractor shall furnish County with Certificates of Insurance (identifying on the face thereof the Project name and Agreement number) as evidence of the above required insurance and such Certificates shall include the following language: Flagler County BOCC as additional insured and an endorsement for which has been issued, subject to a requirement for recurring certificate of insurance every fifteen (15) days from the contract award date until, all obligations under the Contract/Agreement are completed.

Alternatively, in lieu of recurring certificates, the Contractor or Contractor may provide a certificate of insurance that contains a provision that coverage afforded under the policies will not be cancelled until at least thirty (30) days prior written notice has been given to the County, except that in the event of cancellation

for nonpayment of premium the County shall receive notice as prescribed by state law (10 days). The cancellation clause should read as follows: “Should any of the described policies be canceled or material modified before the expiration date thereof, the issuing company will mail 30 day prior written notice to the certificate holder named below, except that in event of cancellation for nonpayment of premium, the notice shall be 10 days unless a longer time is prescribed by Florida Statute.”

The County will not maintain any insurance on behalf of the Contractor covering loss or damage to the work or to any other property of the Contractor.

None of the requirements contained herein as to types, limits and approval of insurance coverage to be maintained by the Contractor are intended to and shall not in any manner limit or qualify the liabilities or obligations assumed by the Contractor under the Agreement.

The Contractor shall deliver the original Certificate of Insurance and one copy to the agent of the County.

Notices, in original and one copy, of cancellation, termination and alteration of such policies shall also be provided to the agent of the County.

5. Scope of Work

The purpose for this Invitation to Bid (ITB) is to solicit competitive sealed bids from vendors for furnishing all labor, tools, transportation, supervision, equipment, materials, supplies and incidentals required for complete pest control services of various Flagler County facilities.

Treatment of all facilities shall be performed between the hours of 8:00 a.m. and 5:00 p.m., Monday through Friday, excluding county recognized holidays, unless otherwise specified in this ITB. Contractor's personnel shall report to the building supervisor at County facilities prior to performing any service.

County facilities covered under this contract shall be treated at the frequency as specified on the Bid Worksheet. Failure to service any location shall result in a deduction of twice the bid amount for each missed location (two {2} times each monthly bid amount).

Contractor shall have the knowledge and ability to identify all pests to be controlled, and the rate of pesticide application for eradication. Contractor shall notify the County Project Manager of damage symptoms associated with insects, rodents, or other pests. The Contractor shall identify and report in writing to the County Project Manager any environmental conditions that encourage potential insect, rodent, or other pest problems.

5.1. Detailed Specifications

INSECT CONTROL

All pest control services performed under this Contract shall align with Integrated Pest Management (IPM) principles, including accurate pest identification, monitoring, exclusion, sanitation, and targeted treatment methods aimed at minimizing chemical use while ensuring effective control. Contractor shall submit a written IPM plan including monitoring schedule, threshold levels, non-chemical control methods, pesticide rotation strategy, and facility-specific treatment protocols.

The Contractor shall adequately suppress all species that have the potential to affect public health, impede operations or damage property, including but not limited to:

- Indoor populations and invading individuals of insects, arachnids, and other arthropods
- Outdoor populations of potentially indoor-infesting species that are within the property boundaries of the specified buildings
- Nests of stinging insects within the property boundaries of the specified buildings

EXTERIOR

The Contractor shall make treatment of the exterior of the structure the primary line of defense against pest infiltration. All entrance ways to buildings and storage areas shall be treated to prevent the access of pests to these areas. An area of not less than six (6) feet from the base of the structure and all areas under covered walkways, halls, archways, garbage areas, etc.

INTERIOR

The Contractor shall treat all interior areas with chemicals which are non-irritating, odorless, and harmless to facility occupants and visitors. These formulations include liquids, dusts, baits in gel type and placement stations, where appropriate, to kill pests. The Contractor shall treat the interior of all County facilities including but not limited to: office areas, storage areas, restrooms, locker/change areas, closets, stairways, attics, elevators, and food service areas, plus any other building portion or part not specifically described herein.

BUSES/VEHICLES

The Contractor shall inspect, maintain, and provide Pest Control services monthly targeting roaches and silverfish on a fleet of approximately thirty (30) County Transportation Buses. All chemicals used shall be non-irritating, odorless, and harmless to vehicle occupants. Desired areas of treatment for buses are to include but not be limited to the following:

- Entire bus interior to include floors, compartments, drivers' area
- Accessible structural voids
- Trash can storage area

Additional County vehicles shall be treated on an as needed basis at the request of the County Project Manager.

INMATE FACILITIES

The Flagler County Inmate Facility is a secure, controlled environment. All pest control and termite-related services performed within or around this Facility shall fully comply with all security directives established by the Sheriff's Office and Facility administration. Access for service technicians shall be granted only as permitted by security personnel, and the Contractor shall adhere to all entry, identification, escort, and restricted-movement requirements.

Interior Treatment and Inspection Requirements

Interior pest control services may only be performed in accordance with established security procedures. The Contractor shall develop a monthly treatment schedule covering all interior service areas within the Inmate Facility. This schedule must ensure that each individual area is treated during every monthly cycle.

Large kitchen and food-service areas shall be treated twice monthly, unless written direction to modify the frequency is provided by Flagler County General Services/Facilities Division. A written record noting each area serviced, including date and service performed, shall be provided to the Building Supervisor upon completion.

Exterior Treatment Requirements

The exterior of the Inmate Facility may be treated only as permitted by security personnel. Exterior pest control and ant-control treatments shall be performed twice per calendar year in accordance with manufacturer specifications.

The ant-control treatment mixture shall be prepared at 0.06% active ingredient, applied in a one-foot out and one-foot up band around the building perimeter, including first-floor doors, windows, eaves, exterior lighting, shutters, and any nests located within 12 feet of the structure's base. All applications must follow EPA/FIFRA label requirements and FDACS regulatory standards.

Use of Bait Products in Secure Areas

Bait-formulated pesticides used inside the Inmate Facility shall be placed only in locations not accessible to inmates, staff, or visitors. Quantities applied must be limited, and all products used must be non-hazardous and appropriate for use in sensitive, occupied environments consistent with Florida Structural Pest Control regulations.

ANT CONTROL

The County requires that Termidor (or an approved equivalent) be used to treat the external structure of all facilities for ant control. The County requests the Contractor provide and place ant bait stations for interior ant infestation. All ant trails shall be followed to the source and ants shall be exterminated (interior and exterior).

The following guidelines are to be followed for Termidor:

- Shall be mixed at a concentration of 0.06% ai (active ingredient).
- Shall be applied twice annually with the first treatment in October/November, the second treatment shall be in April/May.
- Shall be applied on the outside of the structure in a one (1) foot out and one (1) foot up band on and along the sides of the structure, around doors, windows, eaves, exterior lights, and any building penetrations within twelve (12) feet of the base of the structure; and
- Shall be applied directly to any nests that are found in or near the structure exterior.

Any application of restricted-use pesticides (RUPs), including Termidor or equivalent products, shall be performed by personnel holding appropriate FDACS certification under Chapter 482, Florida Statutes.

TERMITE CONTROL

The Contractor shall provide comprehensive termite control services, including inspection, monitoring, treatment, and warranty coverage, in accordance with all FDACS Structural Pest Control requirements and EPA-approved product label directions.

Annual Subterranean Termite Inspection and Treatment

In addition to normal pest control services, the Contractor shall perform a complete annual subterranean termite inspection of all designated Flagler County facilities between late winter and early spring, or as otherwise requested by Flagler County General Services/Facilities Division. Written WDO/termite inspection reports shall be submitted promptly following each inspection.

All facilities shall be treated, as required by common industry practice, to prevent the presence of subterranean termites and other wood-destroying insects.

The Contractor shall provide a minimum one-year warranty for each facility certifying that it will remain free of termites and other wood-destroying insects. If termite activity or termite damage occurs during the warranty period, the Contractor shall be responsible for all necessary repairs and any required re-treatment, consistent with County precedent for repair-inclusive termite coverage.

Ongoing Visual Observation

The Contractor shall maintain continuous observance for evidence of drywood and subterranean termites while performing routine pest control services, documenting any signs of termite activity or conducive conditions.

Annual Comprehensive Termite Inspection

A thorough annual termite inspection shall be completed for all Flagler County facilities. This inspection shall include accessible interior and exterior structural components, attics, crawlspaces (if present), storage areas, and building perimeters.

Termite Eradication Requirements

Termite eradication—whether for subterranean or drywood termites—shall only be performed after all of the following conditions are met:

- The Contractor has identified the type and species of termite infestation.
- The Contractor has determined the total extent and area of infestation.
- The Contractor has submitted a written cost estimate for eradication to Flagler County General Services/Facilities Division.
- Written authorization to proceed has been issued by the County Contract Administrator.

Pricing for Drywood Termite Spot Treatment

Costs for the spot-treatment of drywood termites shall be calculated on a per-square-foot basis.

Pricing for Subterranean Termite Eradication

Costs for subterranean termite eradication shall be calculated on a per-linear-foot basis, consistent with conventional liquid-barrier methods used in current County termite service accounts.

Whole-Structure Fumigation and Preventive Treatment

Costs for whole-structure tenting required for drywood termite eradication shall be calculated on a per-cubic-foot basis.
Subterranean termite preventive services shall be performed using either the Sentricon® System (monitor–bait–monitor) or Termidor® injection, as approved in writing by Flagler County General Services/Facilities Division. These methods reflect existing County preventive practices and industry-standard subterranean termite control.

PRE-CONSTRUCTION TERMITE TREATMENT

When requested, the Contractor shall provide pre-construction termite soil treatment for new Flagler County buildings or building additions requiring subterranean termite protection.

All pre-construction termite treatment services must comply with:

- Florida Department of Agriculture and Consumer Services (FDACS) rules governing pre-construction soil termiticides,
- Florida Building Code, Section 1816.1.7 (FBC-Building) requirements, and
- EPA/FIFRA termiticide label instructions.

Upon completion of a pre-construction termite treatment, the Contractor shall furnish a Certificate of Compliance to the Building Department containing the following language required under §1816.1.7, FBC-B:

> "The building has received a complete treatment for the prevention of subterranean termites. Treatment is in accordance with rules and laws established by the Florida Department of Agriculture and Consumer Services."

All pretreatments shall be performed under the direction of a Certified Operator in Charge (COIC) licensed under Chapter 482, Florida Statutes, and documented in County records per FDACS reporting standards.

RODENT CONTROL

The Contractor shall inspect the location for rodent entry points upon servicing County facilities and/or when a rodent problem has been reported by the County Project Manager. A written recommendation for eradication shall be prepared and provided to the County Project Manager.

Rodent sticky boards and/or live traps shall be the only method of rodent control. The use of snap traps will not be allowed at any County facility. A diagram of the building showing the location of each sticky board and/or live traps shall be developed and a copy of the diagram provided to the County Project Manager.

Rodent sticky boards and/or live traps shall be placed in inconspicuous places in the facility out of reach of building occupants and visitors. Location identifiers shall be placed in visible locations to indicate the location of non-visible traps.

Rodent sticky boards and/or live traps that are set shall be inspected daily by the contractor. The Contractor shall remove all trapped rodents daily.

All sticky boards and/or live traps shall be removed when the rodent problem has been eliminated and approved by the County Project Manager. Trap location identifiers shall be removed when a trap is removed.

If any other method of rodent control is used, and a rodent dies within the wall of a facility, the Contractor is responsible for the removal of the dead rodent, and the cost to repair the facility to its original condition. This repair work shall be conducted by Flagler County General Services/Facilities Division personnel only. Repair cost will be calculated using actual cost of materials and fifty dollars ($50.00) per man/hour.

FOLLOW UP INSPECTIONS

During the life of the Contract, the premises covered shall be inspected periodically to determine the effectiveness of the programs in progress. The Contractor shall make such inspections, document the results of such inspections in writing and submit to the County. In addition, the County reserves the right to conduct inspections of the pest control program at unannounced times and at unannounced intervals, for evaluation purposes. The Contractor shall promptly initiate actions to correct all deficiencies found.

CALLBACKS

The Contractor shall respond between monthly services for treatment of any pest observed in any covered facility. This service shall be provided at no additional charge to the County. When called back for a retreat, the facility shall be inspected and treated only for the problem that exists. This treatment will not replace the next normal scheduled treatment. All callback service shall be completed within next business day of the facility (based on the operating hours of the facility.)

EXCEPTIONS

Though the following pest control functions are not included in the service pricing, these extraditions may be quoted on a case-by-case basis as needed:

- Bat control
- Bird control
- Snake control
- Bed Bugs
- Wood Borers
- Beehive Removal
- Yellow jacket or wasp removal

- Nuisance Wildlife (ad defined by FWC)
- Fumigation

SECURITY/BACKGROUND CHECK

All service technicians that perform services in County facilities shall have a background check conducted through the Florida Department of Law Enforcement (FDLE) and approved by the County Project Manager prior to working in County facilities. The cost of this background check shall be the responsibility of the Contractor. A copy of all background checks shall be provided to the County Project Manager prior to service being performed. The Contractor shall immediately report any new arrest, criminal charges, or convictions of a current employee to the County Project Manager.

UNIFORMS

Contractor must ensure employees wear uniforms displaying the company name or logo and their own name. Uniforms are not to be dirty, stained or torn. Uniforms shall be always worn while on the job. Contractor should provide and ensure the wearing of protective clothing, masks, eye protection, etc., as required by laws, regulations, ordinances and/or manufacturer's instructions for material and equipment. All vehicles should be clearly identified with the company name.

CHEMICALS

All insecticides, pesticides, fungicides, rodenticides, and traps used in the performance of this service contract shall conform to federal, state and local, and OSHA requirements with respect to their toxic, environmental safety, and public health hazards. They are to be approved and in compliance with existing EPA labeling and the use requirements under the Federal Insecticide, Fungicide, and Rodenticide Act, latest revision.

Contractor shall have available a chemical that can be used in certain offices/areas, where employees have respiratory problems.

When requested, the Contractor shall provide a product label and Material Safety Data Sheet (MSDS) to the for each product used. New MSDS sheets shall be provided prior to the application of any new product in any facility.

Contractor shall comply with all consumer notification requirements under Sections 482.2265 and 482.2267, Florida Statutes, including providing notice of pesticide applications and adhering to the State of Florida registry for individuals requiring prior notification.

RECORD KEEPING/REPORTS

The Contractor shall maintain a pesticide application record keeping system, which includes, at a minimum, the following:

- The specific pest for which the facility was treated.
- The specific location within the facility that was treated.

- The type and quantity of pesticide applied.
- The date and time of application.
- Any difficulties encountered during treatment.

The service report shall be submitted monthly for each facility to the County Project Manager.

Records of pesticide application shall be made available to the County Environmental Management Department, or any federal, state, or local regulatory agency, within two (2) working days after receipt of written request.

Recordkeeping requirements shall meet or exceed standards established in Chapter 482, Florida Statutes, including maintaining accurate service logs available for inspection by authorized regulatory agencies. Monthly service logs must include EPA registration numbers, application method, target pest, applicator name and license number, and chemical quantities used.

All pesticide application records may be made available to the public in accordance with applicable public records laws.

CHILD-SENSITIVE & PUBLIC ACCESS AREAS

Contractor shall follow FDACS restrictions for applications near child-occupied facilities, libraries, parks, and public-access buildings, including notification, signage, and limited-exposure application methods.

PESTICIDE DISPOSAL

The Contractor shall dispose of all pesticides, residue, and containers in accordance with the manufacturer's recommendation and regulatory/legal requirements. Pesticide refuse, and other pesticide-contaminated waste shall not be disposed of in any County refuse containers under the awarded Contract.

PERMITS/LICENSES

The Contractor shall, without additional cost to County, obtain all appointments, licenses, and permits required for the prosecution of the work and for complying with all applicable Federal, State and Local laws. Evidence of such permits and licenses should be provided before work commences on the start date of contract and immediately thereafter in the event of change.

Contractor shall perform all pest control services in accordance with Chapter 482, Florida Statutes, and all regulatory requirements of the Florida Department of Agriculture and Consumer Services (FDACS), Structural Pest Control Program.

PRE-PERFORMANCE CONFERENCE

Prior to commencement of the Contract, the County’s Project Manager and the Contractor shall meet and review the schedule and services to be provided. In addition to the number of service technicians servicing this contract, this schedule must show each facility in the order it appears in this Contract and on or about which day(s) of the month each building will be serviced. This schedule must be mutually acceptable to the

Contractor and the County's Project Manager. The Contractor is required to render all services set forth in this Contract, even though it may be necessary to supply man-hours in addition to the anticipated minimum originally contemplated by the Contractor.

6. Pricing Proposal

PEST CONTROL SERVICES

Enter the Total Annual Cost from each section of the Bid Worksheet provided in the Vendor Questionnaire, Section 7 (2.17).

Line Item	Description	Quantity	Unit of Measure	Total Annual Cost	Total
1	Qtrly Pest Service Total	1	Per Year		
2	Annual Termite Service Total	1	Per Year		
3	Rodent	1	Per Year		
TOTAL					

MISCELLANEOUS

Line Item	Description	Unit of Measure	Unit Cost
1	Vehicle Spraying (As Needed)	Each	
2	Labor Rate - Business Hours (8am-5pm)	Per Hour	
3	Labor Rate - After Hours (5pm-8am)	Per Hour	

7. Vendor Questionnaire

1. Acknowledgements

*1.1. Acknowledgment**

By checking yes, the Respondent acknowledges the following:

- Information provided in the response is true and correct and that the submission of a response is final.
- The Respondent agrees to all terms and conditions contained in this solicitation and related exhibits.
- Respondent further agrees and acknowledges that no proprietary or confidential information has been submitted. By submitting this proposal or entering into this contract, Contractor/Respondent acknowledges that all documents submitted are public records and agrees that any records maintained, generated, received, or kept in connection with, or related to the performance of services or delivery of products provided under this proposal or contract are public records subject to the public records disclosure requirements of Florida Statutes sec. 119 et seq., and Article I, section 24 of the Florida Constitution.
- Responses may be withdrawn by the Respondent prior to the closing/offer date. Following the closing date, Respondent understands that a response may not be withdrawn.

☐ Yes
☐ No

*Response required

*1.2. Scope of Services Acknowledgement**

By checking yes, vendor acknowledges the above and/or included Scope of Services and will furnish said product and/or services according to the specifications or scope of services detailed within this Solicitation if awarded.

☐ Yes
☐ No

*Response required

*1.3. Revisions, Addenda, Questions & Answers**

By checking yes, the Respondent acknowledges the following:

All answers to questions of substance will be publicly published using the Question & Answer feature.

Participants are required to review all revisions and answers to questions published. Revisions within the Solicitation as well as responses posted through the 'Question & Answer' feature are authoritative and shall be considered an addendum to the Solicitation. All information in this Solicitation, including information provided

through the 'Question & Answer' feature are incorporated into the Solicitation or any Contract resulting from this Solicitation.

☐ Yes
☐ No

*Response required

*1.4. E-Verify Requirements**

The Contractor shall utilize the U.S. Department of Homeland Security's E-Verify system to verify the employment eligibility of all new employees hired by the Contractor / Consultant on or after the effective date of this Agreement and thereafter during the remaining term of the Agreement, including Subcontractors. Any subcontract entered into by Contractor with any Subcontractor performing work under this contract shall include the following language: "The Subcontractor shall utilize the U.S. Department of Homeland Security's E-Verify system to verify the employment eligibility of all new employees hired by the Contractor on or after the effective date of this Agreement and thereafter during the remaining term of the Agreement." The Contractor covenants and agrees that if it is found in violation of this section or the Executive Order, such violation shall be a material breach of this Agreement and Contractor shall indemnify, defend and hold harmless the County from any fines or penalties levied by a government agency, including the loss or repayment of grant funds by the County.

By checking yes, the vendor agrees to comply with the E-Verify requirements as described in this section.

☐ Yes
☐ No

*Response required

*1.5. Insurance Acknowledgement**

By checking yes, Respondent agrees to the insurance requirements as detailed in the Required Types and Limits of Insurance Chart and the Required Types of Insurance; Insurance Requirements; and Proof of Insurance sub-sections in "General Terms and Conditions".

☐ Yes
☐ No

*Response required

*1.6. Name and Title of Authorized Agent of the Respondent**

Respondent acknowledges that the name and title of the signatory (the "Authorized Signatory"), as completed below, is authorized to execute contracts/agreements with the County of Flagler, and any affixed electronic or conformed signature of the Authorized Signatory shall be the act of and attributable to the Authorized Signatory. By signing this Agreement electronically, the Authorized Signatory does thereby adopt the electronic or conformed signature as his or her own and designates a copy of same for use as an official record by the County of Flagler.

If the below-named individual is not an authorized agent of the firm, as listed with the Florida Division of Corporations (Sunbiz), a Memorandum of Authority shall be uploaded giving that individual authorization to commit the firm to a contract.

Please provide the Complete Name and Title which shall indicate acknowledgment.

*Response required

1.7. Memorandum of Authority

If the Authorized Signatory identified in Section 1.11 above is not an authorized agent of the firm, as listed with the Florida Division of Corporations (Sunbiz), a memorandum of authority, signed by an authorized agent, shall be uploaded in this section giving that individual (Authorized Signatory) the authority to commit the firm to a contract.

*1.8. Conflict of Interest**

The award of this Solicitation is subject to Chapter 112, Florida Statutes. All respondents must disclose with their response the name of any officer, director, or agent who is also an employee of Flagler County. Further, all respondents must disclose the name of any Flagler County employee who owns, directly or indirectly, an interest of the Respondent's/Supplier's firm or any of its subsidiaries associated with this project. I certify that this proposal is made without prior understanding, agreement or connection with any corporation, firm or person submitting a proposal for the same services, and is in all respects fair and without collusion or fraud.

Respondent shall select 'No' if a conflict of interest as defined in this question does NOT exist. Please select 'Yes' if a conflict of interest as defined in this question DOES exist and shall be further described in the explanation below.

☐ Yes
☐ No

*Response required

When equals "Yes"

*1.8.1. Enter explanation of the conflict of interest as indicated above. **

*Response required

*1.9. Public Entity Crime Acknowledgement**

Public Entity Crimes - Pursuant to Section 287.133(12)(a) of the Florida Statutes, a person or affiliate who has been placed on the convicted vendor list following a conviction for a public entity crime may not submit a Submittal Package (Bid Response) on a contract to provide any goods or services to a public entity, may not submit a bond on a contract with a public entity for the construction or repair of a public building or public work, may not submit Submittal Package (Bid Response) on leases of real property to a public entity may not be awarded or perform work as a contractor, supplier, subcontractor, or consultant under a contract with any public entity, and may not transact business with any public entity in excess of the threshold amount provided in Section 287.017 for Category Two ($25,000) for a period of 36 months from the date of being placed on the

convicted vendor list. Respondent should read carefully all provisions of 287.133 and 287.134, Florida Statutes (2005).

By selecting 'Yes', the Respondent represents and warrants that the submission of its response/proposal does not violate Section 287.133, Florida Statutes (2005), nor Section 287.134, Florida Statutes (2005) or their successor. In addition to the foregoing, the Respondent represents and warrants that Respondent, Respondent's subcontractors and Respondent's implementer, if any, is not under investigation for violation of such statutes.

☐ Yes
☐ No

*Response required

*1.10. Acknowledgment Regarding Debarment, Suspension, Ineligibility and Voluntary Exclusion**

By selecting 'Yes' below, the Respondent certifies to the best of its knowledge and belief, that the firm and any subcontractor/supplier in accordance with a response to this solicitation:

- are not presently debarred, suspended, proposed for debarment, declared ineligible, or voluntarily excluded from covered transactions by any Federal department or agency
- have not within a three-year period preceding this bid proposal been convicted of or had a civil judgment rendered against them for commission of fraud or a criminal offense in connection with obtaining, attempting to obtain, or performing a public (Federal, State, or local) transaction or contract under a public transaction; violation of Federal or State antitrust statutes or commission of embezzlement, theft, forgery, bribery, falsification or destruction of records, making false statements, or receiving stolen property.
- are not presently indicted for or otherwise criminally or civilly charged by a government entity (Federal, State, or local) with commission of any of the offenses enumerated in the previous paragraph of this certification.
- have not within a three (3) year period preceding this bid proposal had one or more public transactions (Federal, State, or local) terminated for cause or default.

☐ Yes
☐ No

*Response required

When equals "No"

*1.10.1. Enter explanation of the 'No' response to the Certification Regarding Debarment, Suspension, Ineligibility and Voluntary Exclusion.**

*Response required

*1.11. Scrutinized Companies Certification**

Per State of Florida Statute s. 287.135(5) Suppliers (companies) must acknowledge and agree to the 'Certification Regarding Prohibition Against Contracting with Scrutinized Companies' paragraph listed below. Respondents shall agree by marking the option below. Respondents neglecting to respond may be disqualified from consideration of award and deemed non-responsive.

I hereby certify that neither the responding entity, nor any of its wholly owned subsidiaries, majority-owned subsidiaries, parent companies, or affiliates of such entities or business associations, that exists for the purpose of making profit have been placed on the Scrutinized Companies That Boycott Israel List created pursuant to s. 215.4725 of the Florida Statutes, or are engaged in a boycott of Israel.

In addition, if this Solicitation is for a contract for goods or services where the total contract value is one million dollars ($1,000,000) or more, I hereby certify that neither the responding entity, nor any of its wholly owned subsidiaries, majority- owned subsidiaries, parent companies, or affiliates of such entities or business associations, that exists for the purpose of making profit are on the Scrutinized Companies with Activities in Sudan List or the Scrutinized Companies with Activities in the Iran Petroleum Energy Sector List, created pursuant to s. 215.473 of the Florida Statutes, or are engaged in business operations in Cuba or Syria as defined in said statute.

I understand and agree that the County may immediately terminate any contract resulting from this Solicitation upon written notice if the responding entity (or any of those related entities of respondent as defined above by Florida law) are found to have submitted a false certification or any of the following occur with respect to the company or a related entity: (i) it has been placed on the Scrutinized Companies that Boycott Israel List, or is engaged in a boycott of Israel, or (ii) for any contract for goods or services of one million dollars ($1,000,000) or more, it has been placed on the Scrutinized Companies with Activities in Sudan List or the Scrutinized Companies with Activities in the Iran Petroleum Energy Sector List, or it is found to have been engaged in business operations in Cuba or Syria.

By selecting 'Yes', the respondent acknowledges and agrees to the 'Certification Regarding Prohibition Against Contracting with Scrutinized Companies.'

☐ Yes
☐ No

*Response required

*1.12. Do you or any owner(s), principal(s), or officer(s) of your firm currently serve on any Flagler County board(s) or committee(s)?**

☐ Yes
☐ No

*Response required

When equals "Yes"

*1.12.1. If you indicated YES to Flagler County board/committee question above...**

Please list the individual's full name(s) and the board(s) and/or committee(s) on which they serve.

*Response required

2. Forms/Documentation

*2.1. Bid Submittal Form **

Please download the Bidder's Certification form below, complete, and upload.

- Bidder's_Certification.docx

*Response required

*2.2. Drug-Free Workplace**

Please download the below documents, complete, and upload.

- DRUG_FREE_WORKPLACE.pdf

*Response required

2.3. Hold Harmless Agreement

Please download the below document, complete, and upload.

Only upload if applicable in accordance with Florida Law.

- Flagler_Hold_Harmless_Agree...

2.4. Certification Affidavit of Prime Contractor as Local Business

To claim local preference, Respondent must meet the requirements as set forth in the General Terms and Conditions, Section 2.15, and understand these requirements shall remain for the entire term of the agreement. Failure to notify the County of any change in status as a result of an awarded agreement may result in breach.

Please download the Local Vendor Affidavit below, complete, and upload to claim Local Preference.

- Local_Vendor_Affidavit.pdf

*2.5. Prohibition Against Contingent Fees**

Respondent shall properly complete, notarize and upload the attached disclosure statement certifying that he or she has not employed or retained any company or person, other than a bona fide employee working solely for the respondent to solicit or secure this contract and that he or she has not paid or agreed to pay any person, company, corporation, individual, or firm, other than a bona fide employee working solely for the

respondent any fee, commission, percentage, gift, or other consideration contingent upon or resulting from award or making of this contract.

- Prohibition_Against_Contige...

*Response required

*2.6. Human Trafficking Attestation Pursuant to Section 787.06, Florida Statutes**

A duly authorized officer or representative of the Respondent (non-governmental entity) shall complete the included Flagler County Human Trafficking Attestation Form in compliance with Section 787.06(13), Florida Statutes, (2024).

Download the attached form, complete, and upload completed form.

- Flagler_Human_Trafficking_A...

*Response required

*2.7. References **

Please download the below documents, complete, and upload.

The information provided in this section, must be current and the County must be able to contact references for verification as part of the evaluation process. It is the firm's responsibility to ensure E-mail addresses provided are current and accurate.

Unless specifically asked by Flagler County, the County shall not be listed as a reference. The respondent shall provide examples of similar projects which best illustrates the Consultant's qualification for the scope of services.

- References_Form_11.18.24.pdf

*Response required

*2.8. W-9**

Please attach current W-9 Form

*Response required

*2.9. Proof of Insurance **

Please provide Proof of Insurance - evidence of required insurance coverage or proof of insurability in the amounts indicated. If available, a properly completed ACORD Form is preferable. Upon award, final forms must contain the correct solicitation and/or project number and Flagler County contact person.

Firms that have owner/operators that have filed a "Notice of Election to be Exempt" shall submit a copy with the response

*Response required

*2.10. FDACS Commercial Pest Control License**

Provide FDACS Commercial Pest Control Business License number.

*Response required

*2.11. Certified Operator**

Provide name and certification number of Certified Operator in Charge.

*Response required

*2.12. Professional Certification**

Provide copies of FDACS technician ID cards.

*Response required

*2.13. Florida Department of State, Division of Corporations' Detail by Entity Name Report **

Florida Department of State, Division of Corporations' Detail by Entity Name Report

Provide a Florida Department of State, Division of Corporations' detail by entity name report for your firm, available at www.sunbiz.org. The Respondent shall be required, upon notification of recommendation of award, to register with the Florida Department of State Division of Corporations at www.sunbiz.org in order to provide services under the resulting Contract.

*Response required

*2.14. Registration on Sunbiz.org**

☐ Yes
☐ No

*Response required

When equals "Yes"

*2.14.1. Please provide your Sunbiz.org Document Number**

*Response required

When equals "Yes"

*2.14.2. Please upload your Sunbiz.org certificate.**

*Response required

*2.15. Registration on SAM.gov**

For any federally funded project, bidder agrees to register on SAM.gov if awarded a contract under this solicitation.

☐ Yes
☐ No

*Response required

When equals "Yes"

*2.15.1. Please provide your UEI#**

*Response required

*2.16. IPM Plan**

Provide written IPM (Integrated Pest Management) plan.

*Response required

*2.17. Bid Worksheet**

Please download the below document, complete, and upload. The totals from each section of the worksheet must be entered in the corresponding line items of the Pricing Proposal, Section 6.

- 26-ITB-020_Bid_Worksheet.xls

*Response required

8. Definitions

As used in this Bid, the following terms shall have the meanings set forth below:

Agreement: Result from this solicitation between the County and the Contractor, which is this Bid, along with any written addenda and other written documents, which are expressly incorporated by reference.

Agreement Administrator: The Director of Purchasing and Contracts or designee shall serve as Agreement Administrator. The Agreement Administrator shall be responsible for addressing any concerns within the scope of the Agreement. Any changes to the resulting Agreement shall be made in writing and authorized by the Director of Purchasing and Contracts.

Contractor: The person or entity duly authorized, upon award of an invitation to bid (ITB), to have an Agreement with the County to provide the product and/or services set forth herein and incurring liability for the same.

Contractor's Project Manager: The Project Manager has responsibility for administering this Agreement for the successful Bidder(s) and will be designated prior to the issue of the resulting Master Agreement or Purchase Order.

County: Shall mean Flagler County Board of County Commissioners (a body corporate and politic and a subdivision of the State of Florida) including its districts, authorities, separate units of government established by law, ordinance or resolution, partners, elected and non-elected officials, employees, agents, volunteers, and any party with whom the County has agreed by contract to provide additional insured status.

County's Project Manager(s): The Project Manager(s) have responsibility for the day-to-day administration of the resulting Agreement for the County and will be designated prior to award of the resulting Master Agreement or Purchase Order.

Day: The word "day" means each calendar day or accumulation of calendar days.

Director: The Procurement and Contracts Manager for Flagler County Board of County Commissioners.

Master Agreement: The payment vehicle through with the successful Bidder(s) shall be compensated. This Agreement will be issued in accordance with the specifications, terms, and conditions of this Bid document and shall be valid for a specified period of time with a specific dollar value, which shall not be exceeded annually.

Person or Persons: An individual, firm, partnership, corporation, association, executor, administrator, trustee, or other legal entity, whether singular or plural, masculine or feminine, as the context may require.

Preference: The method of the reducing the proposed Bid or quote price by a designated percentage for the sole purpose of determining the lowest price when compared to other prices submitted during a competitive solicitation.

Protest: Refer to Procurement Manual at https://www.flaglercounty.gov/departments/financial-services/purchasing.

Purchase Order: The County's written document to the Contractor formalizing the proposed transaction, such as a description of item(s)/services, delivery location, payment terms, invoice address and transportation. If there are any conflicts between the Purchase Order and the resulted awarded ITB the terms of the ITB shall prevail.

Respondent: One who submits a response to an invitation to bid (ITB).

Response: A Contractor's offer to the County in response to an invitation to bid (ITB) issued by a purchasing authority.

Subcontractor: A person other than a materialman or laborer who enters into a contract with a Contractor for the performance of any part of the Agreement documents.

Turnkey Solution: A complete solution that is supplied, installed, or purchased in a condition ready for immediate use, occupation, or operation within a specified time frame.

Purchase Order (PO) Terms and Conditions

Providing any goods or service authorized by the PO constitutes acceptance of this entire PO without exception.

This PO authorizes delivery of the listed items or services. If a solicitation number is referenced, the terms and conditions of said solicitation become part of this PO. Deviation from prices on the PO is not permitted without a signed, corrected PO or Change Order. The "Provider" herein is the vendor of the goods or service under the approved PO.

Delivery. Shipping is defined as ***Freight on Board (FOB) Destination, Freight Allowed***. Title and risk of loss shall pass when items have been received, inspected, and accepted by Flagler County ("County"). All associated shipping, insurance, and other related costs shall be borne by Provider. Acceptance of information technology hardware or software is contingent upon completion of a third party risk management assessment to the satisfaction of the County's IT Director.

Discontinued. Provider shall give County thirty (30) days advance notice of a discontinued item(s) so that County can purchase additional quantities of discontinued item(s). County must give written approval of replacement(s) if they exceed previous price or fail to meet quality, form, fit, or function of the discontinued item. Time is of the essence regarding Performance of Services and this PO can be terminated by the County for convenience, non-appropriation of funds, or non-performance.

Disputes. If such dispute arises under this PO and is not resolved informally by the parties within five (5) business days, the party bringing a claim ("Disputing Party") shall deliver to the first level representative of the other party a written statement ("Dispute Notice") describing the dispute. If the respective representatives cannot resolve the dispute within ten (10) days, the dispute shall be escalated through two higher levels of management. If the dispute has not been resolved within twenty-five (25) calendar days after delivery of the Disputing Party's notice, either party may give written notice to the other party declaring the resolution process terminated and pursue other legal recourse or initiate formal non-binding mediation before a single mediator, which shall be completed within thirty (30) days of initiation, in accordance with rules of practice and procedure adopted by the Supreme Court of Florida for court-ordered mediation, Rule 1.700, et seq., of the Florida Rules of Civil Procedure, and Chapter 44, Florida Statutes. If the dispute remains unresolved after conducting such mediation, then either party may proceed to finalize such termination remedies and commence litigation in a court of competent jurisdiction.

Governing Law/Jurisdiction/Venue. This PO shall be governed by the laws of the State of Florida and venue for any litigation arising from this PO shall be in Flagler County, Florida. The parties to this PO knowingly, voluntarily and intentionally waive their rights to a jury trial. Each party agrees to bear its own costs and attorneys' fees relating to any dispute arising under this PO. Provider shall comply with all applicable laws and regulations.

Insurance. For goods and services delivered or performed by Provider on County premises, Provider certifies it maintains comprehensive general liability, worker's compensation ***(or state-issued exemption)*** and auto insurance in the amounts acceptable to the County thereto pertaining to this PO, *and* from an A.M. Best "A—" or better rated insurance firm authorized by the State of Florida Insurance Commissioner. The County reserves the right to require that "Flagler County" be named as additional insured for projects when deemed necessary. For services performed off County premises and goods delivered by third-party carriers, the Provider shall use such carriers that maintain such insurance coverage as set forth above.

Intellectual Property. Provider agrees to protect, defend, indemnify, and save the County, its agents, officials, including elected officials, and employees of the County harmless from and against any and all claims, demands, actions, and causes of action which may arise asserting that a copyright, trademark, trade secret, or patent (collectively "Intellectual Property), as provided under this PO, infringes or misappropriates any third party's intellectual property. If Provider must pay a third party any license, royalty, or other such usage fee in order to deliver the item(s) under this PO, such third party and usage fee must be specified in the Provider's offer to sell to the County.

Indemnification. The Provider shall, at Provider's expense, indemnify, defend, and hold harmless the County, its officers, agents, and employees from or on account of any and all claims, actions, lawsuits, losses, expenses, injuries, damages, judgments, or liabilities of any kind whatsoever resulting from, arising out of, allegedly arising out of, or in connection with the Provider's performance or nonperformance of services pursuant to this PO, whether said services are performed by the Provider, its agents, sub-agents, subcontractors, suppliers, appointees, or employees, or on behalf of the Provider, unless said claims, actions, lawsuits, losses, expenses, injuries, damages, judgments, or liabilities result from, arise out of, or are in connection with the actions of the County, its officers, agents, or employees, for the sole benefit of the County and unrelated to the Provider's performance or nonperformance of its services under this PO.

Modification & Assignment. County may unilaterally change, at no additional cost, the quantity and receiving point within the County for items not yet shipped. All other items must be mutually agreed upon in writing. County is not required to pay for defective items, back-orders, late deliveries, those quantities exceeding the PO quantity, or items shipped at a higher price than stated on the PO. Neither this PO nor any interest herein shall be assigned, transferred, or encumbered by Provider except as authorized in writing by the County.

Notices. All notices given by one party to the other party under this PO shall be delivered to the receiving party's address set forth on this PO either by hand, qualified courier, or e-mail and shall be deemed received the day after it is transmitted. For the County, it shall be addressed to Flagler County Board of County Commissioners, Attention: Purchasing Department, 1769 E. Moody Boulevard, Building 2, Bunnell, Florida, 32110, or if by email: rrounds@flaglercounty.org.

No Waiver. Except as expressly set forth herein, no failure or delay on the part of the County in exercising any right, power, or remedy hereunder shall operate as or be deemed a waiver thereof, nor shall any single or partial exercise of any right, power, or

remedy preclude any other or further exercise thereof, or the exercise of any other right, power, or remedy.

Order of Precedence. In the event of conflict between this PO or a County Contract, the originating County contract and amendments thereto shall be controlling. This control shall pertain to all specifications and scopes of work included in the originating County contract and any amendments thereto.

Payment. Except for construction services, which shall be paid pursuant to the Florida Prompt Payment Act, County shall pay Provider within 45 (forty-five) days after receipt of an accurate and undisputed invoice, unless the County accepts a prompt payment discount from Provider and the goods or services are not defective. Invoice, packing slip, delivery receipt, order acknowledgement, and correspondence shall clearly indicate the PO number. Pursuant to Chapter 218, F.S., the County will pay interest not to exceed one percent (1%) per month on all undisputed invoices not paid within 45 (forty-five) days after receipt of the entire order of the commodity or service AND a properly completed invoice, whichever is later. Any additional or different terms and conditions on Provider's documents shall be considered null and void. The County may deduct amounts it is due from Provider's payment or not pay disputed invoices until such dispute is resolved. Nothing in this PO shall create any obligation on the part of the County to pay directly to any subcontractor or supplier of Provider any monies due to such subcontractor or supplier or claims of such subcontractor or supplier for amounts owed by Provider to subcontractor or supplier for goods or services provided under this PO.

Sovereign Immunity. The County expressly retains all rights, benefits, and immunities of sovereign immunity in accordance with §768.28, Florida Statutes. Notwithstanding anything set forth in any section of the Contract and/or this PO to the contrary, nothing in the Contract and/or this PO shall be deemed as a waiver of immunity of limits of liability of the County beyond any statutory limited waiver of immunity or limits of liability which may have been adopted by the Florida Legislature or may be adopted by the Florida Legislature and the cap on the amount and liability of the County for damages regardless of the number or nature of claims in tort, equity, or contract shall not exceed the dollar amount set by the legislature for tort.

Taxes. County is tax exempt from Florida sales tax (Exemption # 85-8013245979C-5). Certificates are available upon request.

UCC. In addition to any rights or remedies contained in this PO, each party shall have rights, duties, and remedies available through the Uniform Commercial Code (UCC).

Provider's Terms and Conditions. If Provider's terms and conditions conflict with the County's Terms and Conditions, the County's Terms and Conditions shall prevail.

Warranty. Provider warrants that all work or services performed under this PO shall be performed in a good and competent workmanlike manner to the satisfaction of the County, and materials shall be of good quality (unless otherwise stated on PO), and free from defects and pursuant to specifications and requirements of the contract and/or to this PO. Provider warrants merchantability of all goods or services and that they are fit for the ordinary purposes they are intended to serve.

Office of Procurement and Contracts
1769 E. Moody Blvd, Bldg 2
Bunnell, FL 32110

FLAGLER COUNTY FLORIDA

www.flaglercounty.gov
Phone: (386) 313-4008
Fax: (386) 313-4108

QUESTION & ANSWER REPORT

ITB No. 26-ITB-020

Pest Control Services

RESPONSE DEADLINE: August 20, 2026, at 2:00 pm

Thursday, August 13, 2026

1. Flagler County Facilities
Aug 2, 2026, 9:53 PM
Question: How many buildings are there in total and what is the approximate square footage 3f each building?
Aug 2, 2026, 9:53 PM
Answered by Kelly Bowman: This information has been provided in the Bid Worksheet that is found in Section 7: 2.17.
Aug 3, 2026, 4:35 PM

2. Funding
Aug 2, 2026, 9:54 PM
Question: Is there a projected budget for this requirement for the county?
Aug 2, 2026, 9:54 PM
Answered by Kelly Bowman: The annual spend on the current contract is approximately $50,000.
Aug 3, 2026, 4:35 PM

3. No subject
Aug 3, 2026, 3:24 PM
Question: How many buildings are there in total and what is the approximate square footage of each building?
Aug 3, 2026, 3:24 PM
Answered by Kelly Bowman: Please see question #1.
Aug 3, 2026, 4:35 PM

4. Pest Control Services Bid
Aug 3, 2026, 10:01 AM
Question: Is there a previous contract for this project that can be reviewed?
Aug 3, 2026, 10:01 AM

Andy Dance	Greg Hansen	Kim Carney	Leanne Pennington	Pam Richardson
District 1	District 2	District 3	District 4	District 5

Answered by Kelly Bowman: This would require a public records request. You can make a request by emailing publicrecords@flaglercounty.gov.
Aug 5, 2026, 7:55 AM

5. Previous Bid Tabulation Sheet
Aug 4, 2026, 8:16 AM
Question: How can I get a copy of the previous Bid Tab sheet?
Aug 4, 2026, 8:16 AM
Answered by Kelly Bowman: Please see question 4.
Aug 5, 2026, 7:55 AM

6. Pest Control Services Bid
Aug 3, 2026, 10:00 AM
Question: On the pricing sheet you have a line item for termite services, however there isnt any mention of termite treatment methods or expectations in the protocol. Can you provide this information?
Aug 3, 2026, 10:00 AM
Answered by Kelly Bowman: Please see Addendum #1.
Aug 5, 2026, 8:04 AM

7. No subject
Aug 10, 2026, 4:36 PM
Question: The wording of the buses/vehicles section on the ITB Package says "Contractor shall inspect, maintain, and provide services monthly" Also, the Inmate Facility specifies "Twice Monthly." Every building on the response sheet is currently listed as Quarterly. Can you confirm which information is correct?
Aug 10, 2026, 4:36 PM
Answered by Kelly Bowman: The duration of services provided in the Scope of Work are correct. We are asking you to convert the cost of those services, whether it be monthly, twice a month, etc., to a quarterly cost on the Bid Worksheet.
Aug 11, 2026, 11:24 AM

8. No subject
Aug 10, 2026, 2:32 PM
Question: Will flea treatments be required for the dog parks under this quarterly pricing?
Aug 10, 2026, 2:32 PM
Answered by Kelly Bowman: Yes, flea treatments should be included in the pricing for the dog parks.
Aug 11, 2026, 11:24 AM

9. Rodent Boxes
Aug 10, 2026, 2:54 PM
Question: The Rodent Tab does not specify the service frequency (Monthly, Bi-Monthly, Quarterly) of the boxes. Is this up to the company to decide/submit, or does the County have a preference?
Aug 10, 2026, 2:54 PM

Answered by Kelly Bowman: The County prefers monthly service.
Aug 11, 2026 3:28 PM

Office of Procurement and Contracts
1769 E. Moody Blvd, Bldg 2
Bunnell, FL 32110

FLAGLER COUNTY FLORIDA

www.flaglercounty.gov
Phone: (386) 313-4008
Fax: (386) 313-4108

Addendum No.: 1
Solicitation No.: 26-ITB-020
Solicitation: Pest Control Services
Addendum Date: August 5, 2026
Procurement Contact: Kelly Bowman

This addendum is issued to provide all prospective bidders/offerors with information on questions, clarifications, and revisions made to the solicitation. **This addendum is hereby incorporated in and made a part of 26-ITB-020.**

SECTION 5, SCOPE OF WORK

Added the following sections:

INMATE FACILITIES

TERMITE CONTROL

PRE-CONSTRUCTION TERMITE TREATMENT

NOTE: Items that are ~~struck through~~ are deleted. Items that are underlined have been added or changed. All other terms and conditions remain as stated in the ITB.

INSTRUCTIONS:

Receipt of this addendum must be acknowledged as instructed in the solicitation document. Failure to acknowledge receipt of this Addendum may result in the response being deemed non-responsive.

All questions, clarifications, and inquiries relating to this solicitation, should be posted in OpenGov in the "Questions" space provided. If you require assistance with navigating OpenGov, contact the Office of Procurement and Contracts at purchasing@flaglercounty.gov

It is the bidder/proposer's responsibility to become familiar with and fully informed regarding the terms, conditions and specifications of this solicitation. Lack of understanding and misinterpretation of any portions of this solicitation shall not be cause for withdrawal of your response after opening or for subsequent protest of award.

END OF ADDENDUM NO. 1

Andy Dance	Greg Hansen	Kim Carney	Leanne Pennington	Pam Richardson
District 1	District 2	District 3	District 4	District 5

Office of Procurement and Contracts
1769 E. Moody Blvd, Bldg 2
Bunnell, FL 32110

FLAGLER COUNTY FLORIDA

www.flaglercounty.gov
Phone: (386) 313-4008
Fax: (386) 313-4108

Addendum No.: 2 – Final Addendum
Solicitation No.: 26-ITB-020
Solicitation: Pest Control Services
Addendum Date: August 13, 2026
Procurement Contact: Kelly Bowman

This addendum is issued to provide all prospective bidders/offerors with information on questions, clarifications, and revisions made to the solicitation. **This addendum is hereby incorporated in and made a part of 26-ITB-020.**

Added:

SECTION 9, ATTACHMENTS/EXHIBITS

Attachment B – Questions & Answers Report

NOTE: Items that are ~~struck through~~ are deleted. Items that are underlined have been added or changed. All other terms and conditions remain as stated in the ITB.

INSTRUCTIONS:

Receipt of this addendum must be acknowledged as instructed in the solicitation document. Failure to acknowledge receipt of this Addendum may result in the response being deemed non-responsive.

All questions, clarifications, and inquiries relating to this solicitation, should be posted in OpenGov in the "Questions" space provided. If you require assistance with navigating OpenGov, contact the Office of Procurement and Contracts at purchasing@flaglercounty.gov

It is the bidder/proposer's responsibility to become familiar with and fully informed regarding the terms, conditions and specifications of this solicitation. Lack of understanding and misinterpretation of any portions of this solicitation shall not be cause for withdrawal of your response after opening or for subsequent protest of award.

END OF ADDENDUM NO. 2

Andy Dance	Greg Hansen	Kim Carney	Leanne Pennington	Pam Richardson
District 1	District 2	District 3	District 4	District 5

PEST PREVENTION - COMMERCIAL

Massey Services' Commercial Pest Prevention Programs are well rooted in the concepts of IPM, Integrated Pest Management. Integrated Pest Management puts emphasis on pest ID and biology, inspection, trapping, removal and exclusion which are major points of focus in all Massey Services' Pest Prevention Programs. Fundamentally, Pest Prevention is a holistic approach to insect and rodent pest management. Each pest program has been designed so that a Technician will be able to provide a customized service of a property based upon inspections throughout the entire interior and exterior of that property. Whether it's treatment for mosquitoes, rodents, flies, stored product pests, cockroaches or any indoor pests, Massey's Technicians are taught to begin each service with an inspection of the structure and property to identify Conditions that are conducive to pests, Avenues of entry for pests and Sources of pest activity. Technicians are educated to identify cultural and environmental elements in and around the structure that contribute to the success of the pests and how to communicate to the Customer ways to eliminate these issues. The use of baits, dusts, granular and/or liquid remedies is directed by Massey's Training & Technical Department. They have created and regularly review a seasonally, adjusted, annual material use program which includes environmentally responsible pest specific treatment protocols.

The principals of Pest Prevention are utilized on behalf of the customer through the collaboration of the Technician and Service Manager. The Service Manager is responsible for assigning each day's work to the Technicians under his charge. The time, tools and materials required to meet the needs of each customer serviced is assigned by the Service Manager to Massey's Pest Prevention Technicians. At the end of each day the Service Manager meets with each Technician to verify the day's assignments were completed successfully, review results, adjust resources and schedule Pro Active Follow Up Services. Pro Active Services are additional services scheduled at the discretion of the Technician or Service Manager to ensure expected results are attained for certain pest issues (rodents, cockroaches, Mega colony ants, etc.).

Massey Services is recognized as an innovative and environmentally responsible industry leader. From our decision in 1986 to eliminate the use of organophosphate pesticides from our product mix to the more recent awards and recognition from both state and national organizations for environmental excellence, including the Orange County Florida Environmental Excellence Award and two-time recognition by the E.P.A. for Pesticide Environmental Stewardship, environmental responsibility remains a hallmark of Massey Services Massey Services Technicians are trained and equipped to follow service strategies that support their efforts to provide responsible Pest Prevention Services. This includes Inspection, Pest Removal, Population Reduction, Environmental Modification, Exclusion, Customer/Occupant Education and finally material application.

Massey Technicians are equipped as follows:

Inspection

- Flashlight
- Small metal spatula
- Extendable inspection mirror
- Screwdrivers
- Pliers
- Socket set
- Adjustable Wrench
- Cordless Drill
- Drill Bits
- Hammer

Removal – Population Reduction

- HEPA Vacuum
- Massey Insect Detection Traps (IDT) or EZ Conceal Insect Monitor
- Rodent Traps
    - T-Rex, Kness, Victor Snap traps
    - Multi-catch mouse traps
    - Secured exterior bait stations
        - Carry a brush for cleaning the bait stations and tin cats
- Pheromone Traps

Exclusion

- Caulk and caulk gun
- Expandable foam
- ¼ inch hardware cloth
- Screen material
- Staple gun & adhesive
- Copper Stuf-Fit and/or foam
- Xcluder fill fabrics
- Rid-O-Mice weep hole cover
- Xcluder door sweep

Material Application Tools and Equipment

- B & G
- Hand Duster (White Crusader or Bellows)
- Bait Gun
- Accu-Spray
- Actisol/B & G PAS
- 50 to 100 Foot extension cord

Approved Pest Prevention Materials

- Seasonally adjusted material rotation plan
- Low impact baits, dust and containerized materials

Service Documentation & Education Materials

- iPad
- Massey Service, Inc. Logbook at customer sites
- Pest Prevention Service Report
- Device Maps
- Corporate Account Protocols
- Pest Specific Service Protocols
- Pest Specific Fast Facts Educational Materials

The Service Procedures detailed below are intended to first impact the pest population present at the time of service and then influence the environment through trapping, exclusion and/or baiting to prevent establishment of new pest populations. A thorough inspection followed by a detailed service will establish a level of influence that will ensure performance of our Pest Prevention Program and customer satisfaction.

Service Procedures:

- Upon arrival at an account
  - Meet the primary contact person
  - Inquire if they have had any ongoing pest issues since the last service
  - Inform them what to expect from the service for the day.
- Review the logbook to ensure the following documents are current:
  - pest sighting log
  - Corrective action
  - Current device map
  - Approved pesticide
  - Safety Data Sheet
  - Licenses
  - Service reports.

Service Overview:
INTERIOR

- Frequency of inspections/services will be based on the service agreement or Corporate Account Protocols and are usually set up monthly, twice a month, or weekly. The accounts should be broken into zones for healthcare and hospitality facilities, restaurants (Wendy's), retail stores (PetSmart, Aldi), and convenience stores (Wawa, RaceTrac, and Murphy USA).
- Service actions are directed by needs identified during inspections, including pest activity in and around the account, pests trapped on the monitoring devices, sanitation, and

structural deficiencies. Corrective actions will be addressed through population reduction using physical removal, exclusion and trapping, resolving sanitation and structural deficiency, and the application of approved contact materials. When appropriate, containerized baits, gel baits, and crack & crevice residual materials may be applied.

- Most commercial accounts will have one or more of these interior monitoring programs and should be serviced as part of the regular service.
  - Interior Rodent Trap
  - Pheromone Trap
  - Insect Light Trap
  - Insect Detection Traps

  - **Interior Rodent Trap (IRT):**
    - Device map in the logbook should have current location of all the IRT.
    - Open the Tin Cat.
    - Punch the date tag or scan the bar-code.
    - Record the activity status.
    - Remove and replace the glue board (if installed) and clean the station using a brush or appropriate other tools (if applicable)
    - Close the Tin Cat.

  - **Pheromone Trap (PT):**
    - Device map in the logbook should have current location of all PT.
    - Inspect the PT, document the date and total number of pests trapped on the trap during the service and service report.
      - The new trap catch count will be determined by subtracting the current trap count from the previous trap count data.
    - The pheromone lures and traps must be replaced based on manufactures recommendation or as required by the account protocol **or if is more than 1/3 full.**

  - **Insect Light Trap (ILT):**
    - Device map in the logbook should have current location of all the ILT.
    - Open the ILT.
    - Punch the date tag or scan the bar-code.
    - Record the total number of insects trapped by pest categories (house flies, large flies, fruit flies, small flies, etc.) on the service report.
    - Wipe down the bulbs free of dirt and debris.
    - Remove and replace the glue board as needed.
    - Close the ILT.

  - **Insect Detection Trap (IDT):**
    - Place your monitors within either a potential (or actual) roach harborage or along a 'travel point', which is the avenue that a roach uses to go from its

harborage to its food source. These spots are where you place bait…out of sight, but where they can be accessed and not swept away.
- If you are monitoring a drop ceiling area, mark the ceiling areas with colored dot where you have placed the monitors for easy viewing.
- Avoid placing the traps in wet areas or on floor that get washed regularly.
- Replace any monitors that you find missing during your inspections or if it has activity or dust on it. Place an additional one on either side of the IDT until captures cease.
- Record the total number of insects trapped by pest categories (Cockroaches, crawling insects, etc.) on the service report.

- **Exterior** – Exterior services include inspections to identify conditions, avenues, and sources that could lead to or contribute to ongoing pest issues. Crawling insect populations and rodent activity will be addressed by identifying and addressing structural and sanitation issues, through exclusionary services and the application of approved baits, granules, or contact materials. The frequency of rodent inspections/services will be established based on the corporate account protocol or level of rodent activity. In most cases, exterior services are done monthly and will include exterior rodent bait station monitoring program.

  - **Rodent Program:** The exterior rodent bait station (RBS) will be placed around the facility based on the history of rodent activity, typically 30 to 50 feet apart or based on the customer-approved protocol. The RBS will be labeled and have a date tag or barcode inside. During each service, the station will be cleaned, baits replaced, and the date tag marked off or the barcode scanned for that month's service. Rodent activity and the number of bait blocks replaced will be documented on the service reports.
    - **RBS Monitoring Protocol**
      - Device map in the logbook should have current location of all the RBS.
      - Open the bait station using appropriate key.
      - Clean the station using brush or other appropriate tools.
      - Punch the date tag or scan the bar-code.
      - Replace the baits monthly.
      - Record the activity status.
      - Close the station.
    - **Exterior Service**
      - Apply insect bait (use material rotation chart) based on inspection and seasonal conditions to turf and plant bed around the facility.
      - Apply residual insecticide to exterior door and entry points, and the foundation may also be treated to a height of 1 to 3 feet. Read product label to ensure compliance.

SUBMITTAL BOND

STATE OF Florida Bond no.:

COUNTY OF Flagler

KNOW ALL MEN BY THESE PRESENTS that Massey Services Inc., as Contractor, duly authorized to conduct business in the State of Florida, whose principal place of business is located at 1801 S Nova Rd. South Daytona, FL 32119, Tel.: (386)248-3200, (hereinafter called "PRINCIPAL"), and Massey Services Inc, as SURETY, duly authorized to conduct business in the State of Florida, whose principal place of business is located at 1801 S Nova Rd. South Daytona, FL 32119, Tel.: _____ (hereinafter called "SURETY"), are held and firmly bound unto Flagler County Board of County Commissioners as COUNTY, a body corporate and politic and a subdivision of the State of Florida, whose address is Flagler County Board of County Commissioners, 1769 E. Moody Blvd, Bldg. 2, Bunnell, FL 32110, Tel.: (386) 313-4000, (hereinafter called "OBLIGEE"), in the penal sum of Forty-three thousand Six Hundred Forty-Five dollars and (50)/100 ($ 43,645.50), lawful money of the United States, for the payment of which sum will and truly to be made, whereof PRINCIPAL and SURETY bind themselves, their heirs, executors, administrators, successors and assigns, jointly and severally, firmly by these presents.

THE CONDITION OF THIS OBLIGATION IS SUCH that, whereas the Principal has submitted the accompanying Bid, dated August 18th, 2026, for:

Contract No, Project Title 26-ITB-020

Project address and/or legal description [if applicable]

Multiple sites in Flagler County

General description of Work

Services for general pest, termite, and rodents

NOW, THEREFORE,

A. If the principal shall not withdraw said Proposal within one hundred twenty (120) days after date of opening of the same, and shall within ten (10) days after the prescribed forms are presented to it for signature, enter into a written contract with the County in accordance with the Proposal as accepted, and give bonds with good and sufficient surety or sureties, as may be required, for the faithful performance and proper fulfillment of such contract, then the above obligations shall be void and of no effect, otherwise to remain in full force and virtue.

B. In the event of the withdrawal of said Proposal within the period specified, or the failure to enter into such contract and give such bonds within the time specified, if the principal shall pay the County the difference between the amount specified in said Proposal and the amount for which the County may procure the required work and supplies, if the latter amount be in excess of the former, then the above obligations shall be void and of no effect, otherwise to remain in full force and virtue.

[The remainder of this page has been purposefully left blank.]

IN WITNESS WHEREOF, the above bounded parties have executed this instrument under their several seals, this 18th day of August, A.D. 2026, the name and corporate seal of each corporate party being hereto affixed and these presents duly signed by its undersigned representative, pursuant to authority of its governing body. *Note: If the firm is a sole ownership or partnership including limited liability company, two (2) witnesses are required to attest the signature. If the firm is a corporation, then the corporate secretary shall attest and affix the corporate seal (Attach power of attorney to original Bid bond and financial statement of Surety Company).*

PRINCIPAL:

Bryan Mumme
Signature

Division Vice President - Commercial
Corporate Officer & Title

ATTEST:

Signature

Corporate Secretary *(Affix Corporate Seal)*

WITNESSES:

John A Fazio

GM - Daytona Commercial

SURETY

Attorney-in-Fact (signature)

Name & Title

Name of Local Resident Agent

City, State, Zip

Telephone

ATTEST:

Signature

Corporate Secretary *(Affix Corporate Seal)*

WITNESS:
A.M. Best No.
NAIC No.:

STATE OF Florida

COUNTY OF Orange

Before me this day personally appeared Bryan Mumme *(affiant), who, being duly sworn, deposes and says that he/she is the Attorney-in-Fact for the* _____ *(corporate surety) and that this person has been authorized by* Massey Services _ *(corporate surety) to execute the forgoing bond on behalf of the Contractor named therein in favor of Flagler County Board of County Commissioners.*

Signature of Affiant

Sworn to and subscribed before me by means of ☐ *physical presence or* ☑ *online notarization this* 20 *day of* August 2026 *by* Bryan Mumme _, *who is/are personally known to me or who has/have produced* _____ *as identification.*

NOTARY PUBLIC – STATE OF

Type or print name: Jennifer Mohs

Commission No.

Commission Expires

(Seal)

JENNIFER MOHS
MY COMMISSION EXPIRES
03-30-2029
NOTARY
PUBLIC
COMM. # HH 619796
STATE OF FLORIDA

DRUG FREE WORKPLACE

I, the undersigned, in accordance with Florida Statute 287.087, hereby certify that, (print/type name of firm):

Massey Services

- Publishes a written statement notifying that the unlawful manufacture, distribution, dispensing, possession, or use of a controlled substance is prohibited in the Workplace named above, and specifying actions that will be taken against violations of such prohibition.
- Informs employees about the dangers of drug abuse in the workplace, the firm's policy of maintaining a drug free working environment, and available drug counseling, rehabilitation, and employee assistance programs, and the penalties that may be imposed upon employees for drug use violations.
- Gives each employee engaged in providing commodities or contractual services that are under bid or proposal, a copy of the statement specified above.
- Notifies the employees that as a condition of working on the commodities or contractual services that are under bid or proposal, the employee will abide by the terms of the statement and will notify the employer of any conviction of, please or guilty or nolo contendere to, any violation of Chapter 1893, or of any controlled substance law of the State of Florida or the United States, for a violation occurring in the workplace, no later than five (5) days after such conviction, and requires employees to sign copies of such written statement to acknowledge their receipt.
- Imposes a sanction on, or requires the satisfactory participation in, a drug abuse assistance or rehabilitation program, if such is available in the employee's community, by any employee who is so convicted.
- Makes a good faith effort to continue to maintain a drug free workplace through the implementation of the Drug Free Workplace program.
- "As a person authorized to sign this statement, I certify that the above-named business, firm or corporation complies fully with the requirements set forth herein".

John A Fazio
Authorized Signature

8/18/2026
(Date)

John Fazio
(Print Name)

STATE OF FLORIDA, COUNTY OF Orange

The foregoing instrument was acknowledged before me this 18 day of August, 2026 by John FAzio, who is personally known to me or who has produced ____ as identification and who did take an oath.

My Commission Expires:

Jennifer Mohs
Notary Public

JENNIFER MOHS
MY COMMISSION EXPIRES 03-30-2029
NOTARY PUBLIC
COMM. # HH 619796
STATE OF FLORIDA

Contractor Name:
Vendor (VSS) ID:
Contract Number:

HUMAN TRAFFICKING ATTESTATION PURSUANT TO SECTION 787.06, FLORIDA STATUTES

Name of Entity/Contractor: Massey Services Inc ("Nongovernmental Entity")

This form has been completed by a duly authorized officer or representative of the Nongovernmental Entity in conjunction with the execution, renewal, or extension of a contract with County of Volusia, a governmental entity and political subdivision of the State of Florida, ("Governmental Entity") in compliance with Section 787.06(14), Florida Statutes, (2025).

The Nongovernmental Entity acknowledges that Section 787.06(14), Florida Statutes, provides that when a contract is executed, renewed, or extended between a nongovernmental entity and a governmental entity, the nongovernmental entity must provide the governmental entity with an affidavit signed by an officer or a representative of the nongovernmental entity under penalty of perjury attesting that the nongovernmental entity does not use coercion for labor or services. For purposes of this requirement, "labor" means work of economic or financial value and "services" means any act committed at the behest of, under the supervision of, or for the benefit of another. The term, "services" includes, but is not limited to, forced marriage, servitude, or the removal of organs.

Pursuant to Section 787.06, Florida Statutes, when a contract is executed, renewed, or extended between you, a nongovernmental entity, and Volusia County, a governmental entity in the State of Florida, you are hereby providing this affidavit under penalties of perjury that you do not use ***coercion for labor or services.*** Coercion includes, without limitation, using or threatening to use physical force against any person; restraining, isolating, or confining or threatening to restrain, isolate, or confine any person without lawful authority and against her or his will; using lending or other credit methods to establish a debt by any person when labor or services are pledged as a security for the debt, if the value of the labor or services as reasonably assessed is not applied toward the liquidation of the debt, the length and nature of the labor or services are not respectively limited and defined; destroying, concealing, removing, confiscating, withholding, or possessing any actual or purported passport, visa, or other immigration document, or any other actual or purported government identification document, of any person; causing or threatening to cause financial harm to any person; enticing or luring any person by fraud or deceit; or providing a controlled substance as outlined in Schedule I or Schedule II of Section 893.03, Florida Statutes, to any person for the purpose of exploitation of that person.

This signed attestation is provided to the Governmental Entity to comply with the statutory requirement. If, at any time in the future, the Nongovernmental Entity does use coercion for labor or services, the Nongovernmental Entity will immediately notify the Governmental Entity and no contracts may be executed, renewed, or extended between the parties.

This attestation is made for the benefit of, and reliance by, the Governmental Entity.

Under penalties of perjury, I declare that I have read the foregoing statement and that the facts stated in it are true.

Printed Name: John A Fazio Title: General Manager

Signature: John A Fazio Date: 8/10/26

PROHIBITION AGAINST CONTINGENT FEES:

In accordance with Florida Statute 287.055(6)(a), the following statement, duly signed and notarized, must be included in each proposal:

The firm, MASSEY SERVICES, warrants that he or she has not employed or retained any company or person, other than a bona fide employee working solely for the respondent to solicit or secure this agreement and that he or she has not paid or agreed to pay any person, company, corporation, individual, or firm, other than a bona fide employee working solely for the respondent any fee, commission, percentage, gift, or other consideration contingent upon or resulting from award or making of this agreement.

By John A Fazio Date 8/18/2026
(Signature)

By JOHN FAZIO/GENERAL MANAGER
Corporate Officer Name & Title

STATE OF Florida
COUNTY OF ~~Flagler~~ Orange

Sworn to/affirmed and subscribed before me this 18th *day of* August, 2026 *by* John Fazio, *who is personally known to me or who has produced* _____ *as identification.*

Jennifer Mohs
NOTARY PUBLIC – STATE OF Florida

Type or print name: Jennifer Mohs

Commission No.: _____

Commission Expires: _____

JENNIFER MOHS
MY COMMISSION EXPIRES 03-30-2029
NOTARY PUBLIC
COMM. # HH 619796
STATE OF FLORIDA

REFERENCES

Agency **#1**	City of Holly Hill
Address	1065 Ridgewood Ave
City, State, ZIP	Daytona Beach, FL 32117
Contact Person	Steve Juengst
E-mail	sjuengst@hollyhillfl.org Phone:
Date(s) of Service	Feb 1995 - Current
Type of Service	Pest Prevention Monthly
Comments:	
Agency **#2**	City of Flagler Beach
Address	PO Box 70
City, State, ZIP	Flagler Beach, FL 32136
Contact Person	Eric Whitwam
E-mail	ewhitwam@cityofflaglerbeach.com Phone:
Date(s) of Service	July 2013 - Current
Type of Service	Pest Prevention Monthly
Comments:	
Agency **#3**	City of Marco Island
Address	50 Bald Eagle Dr
City, State, ZIP	Marco Island, FL 34145
Contact Person	Jose Muchati
E-mail	jmuchati@cityofmarcoisland.com Phone:
Date(s) of Service	OCT 2009 - Current
Type of Service	Pest Prevention Monthly
Comments:	

Form **W-9**
(Rev. March 2024)
Department of the Treasury
Internal Revenue Service

Request for Taxpayer Identification Number and Certification

Go to *www.irs.gov/FormW9* for instructions and the latest information.

Give form to the requester. Do not send to the IRS.

Before you begin. For guidance related to the purpose of Form W-9, see *Purpose of Form*, below.

Print or type. See *Specific Instructions* on page 3.

1 Name of entity/individual. An entry is required. (For a sole proprietor or disregarded entity, enter the owner's name on line 1, and enter the business/disregarded entity's name on line 2.)

Massey Services, Inc,

2 Business name/disregarded entity name, if different from above.

3a Check the appropriate box for federal tax classification of the entity/individual whose name is entered on line 1. Check only **one** of the following seven boxes.

☐ Individual/sole proprietor ☑ C corporation ☐ S corporation ☐ Partnership ☐ Trust/estate

☐ LLC. Enter the tax classification (C = C corporation, S = S corporation, P = Partnership) . . . . .

Note: Check the "LLC" box above and, in the entry space, enter the appropriate code (C, S, or P) for the tax classification of the LLC, unless it is a disregarded entity. A disregarded entity should instead check the appropriate box for the tax classification of its owner.

☐ Other (see instructions)

4 Exemptions (codes apply only to certain entities, not individuals; see instructions on page 3):

Exempt payee code (if any)

Exemption from Foreign Account Tax Compliance Act (FATCA) reporting code (if any)

(Applies to accounts maintained outside the United States.)

3b If on line 3a you checked "Partnership" or "Trust/estate," or checked "LLC" and entered "P" as its tax classification, and you are providing this form to a partnership, trust, or estate in which you have an ownership interest, check this box if you have any foreign partners, owners, or beneficiaries. See instructions . . . . . ☐

5 Address (number, street, and apt. or suite no.). See instructions.

315 Groveland Street

6 City, state, and ZIP code

Orlando, FL 32804

Requester's name and address (optional)

7 List account number(s) here (optional)

Part I Taxpayer Identification Number (TIN)

Enter your TIN in the appropriate box. The TIN provided must match the name given on line 1 to avoid backup withholding. For individuals, this is generally your social security number (SSN). However, for a resident alien, sole proprietor, or disregarded entity, see the instructions for Part I, later. For other entities, it is your employer identification number (EIN). If you do not have a number, see *How to get a TIN*, later.

Note: If the account is in more than one name, see the instructions for line 1. See also *What Name and Number To Give the Requester* for guidelines on whose number to enter.

Social security number

			–			–				

or

Employer identification number

5	9	–	2	5	5	7	1	5	0

Part II Certification

Under penalties of perjury, I certify that:

1. The number shown on this form is my correct taxpayer identification number (or I am waiting for a number to be issued to me); and
2. I am not subject to backup withholding because (a) I am exempt from backup withholding, or (b) I have not been notified by the Internal Revenue Service (IRS) that I am subject to backup withholding as a result of a failure to report all interest or dividends, or (c) the IRS has notified me that I am no longer subject to backup withholding; and
3. I am a U.S. citizen or other U.S. person (defined below); and
4. The FATCA code(s) entered on this form (if any) indicating that I am exempt from FATCA reporting is correct.

Certification instructions. You must cross out item 2 above if you have been notified by the IRS that you are currently subject to backup withholding because you have failed to report all interest and dividends on your tax return. For real estate transactions, item 2 does not apply. For mortgage interest paid, acquisition or abandonment of secured property, cancellation of debt, contributions to an individual retirement arrangement (IRA), and, generally, payments other than interest and dividends, you are not required to sign the certification, but you must provide your correct TIN. See the instructions for Part II, later.

Sign Here Signature of U.S. person Cynthia Holder Date 1/16/24

General Instructions

Section references are to the Internal Revenue Code unless otherwise noted.

Future developments. For the latest information about developments related to Form W-9 and its instructions, such as legislation enacted after they were published, go to *www.irs.gov/FormW9*.

What's New

Line 3a has been modified to clarify how a disregarded entity completes this line. An LLC that is a disregarded entity should check the appropriate box for the tax classification of its owner. Otherwise, it should check the "LLC" box and enter its appropriate tax classification.

New line 3b has been added to this form. A flow-through entity is required to complete this line to indicate that it has direct or indirect foreign partners, owners, or beneficiaries when it provides the Form W-9 to another flow-through entity in which it has an ownership interest. This change is intended to provide a flow-through entity with information regarding the status of its indirect foreign partners, owners, or beneficiaries, so that it can satisfy any applicable reporting requirements. For example, a partnership that has any indirect foreign partners may be required to complete Schedules K-2 and K-3. See the Partnership Instructions for Schedules K-2 and K-3 (Form 1065).

Purpose of Form

An individual or entity (Form W-9 requester) who is required to file an information return with the IRS is giving you this form because they

CERTIFICATE OF LIABILITY INSURANCE

DATE (MM/DD/YYYY): 6/8/2026

THIS CERTIFICATE IS ISSUED AS A MATTER OF INFORMATION ONLY AND CONFERS NO RIGHTS UPON THE CERTIFICATE HOLDER. THIS CERTIFICATE DOES NOT AFFIRMATIVELY OR NEGATIVELY AMEND, EXTEND OR ALTER THE COVERAGE AFFORDED BY THE POLICIES BELOW. THIS CERTIFICATE OF INSURANCE DOES NOT CONSTITUTE A CONTRACT BETWEEN THE ISSUING INSURER(S), AUTHORIZED REPRESENTATIVE OR PRODUCER, AND THE CERTIFICATE HOLDER.

IMPORTANT: If the certificate holder is an ADDITIONAL INSURED, the policy(ies) must have ADDITIONAL INSURED provisions or be endorsed. If SUBROGATION IS WAIVED, subject to the terms and conditions of the policy, certain policies may require an endorsement. A statement on this certificate does not confer rights to the certificate holder in lieu of such endorsement(s).

PRODUCER
McGriff, a MMA LLC Company
485 N. Keller Road Suite 551
Maitland FL 32751

CONTACT NAME: Karie L. Evans
PHONE (A/C, No, Ext): 407-691-9600 FAX (A/C, No): 888-635-4183
E-MAIL ADDRESS: MCG.CertOrlando@MarshMMA.com

INSURER(S) AFFORDING COVERAGE	NAIC #
INSURER A : Great American Risk Solutions Surplus	35351
INSURER B : Safety National Casualty Corporation	15105
INSURER C : QBE Specialty Insurance Company	11515
INSURER D :	
INSURER E :	
INSURER F :	

INSURED 131MASSESER
Massey Services, Inc.
315 Groveland Street
Orlando FL 32804

COVERAGES **CERTIFICATE NUMBER:** 1114878882 **REVISION NUMBER:**

THIS IS TO CERTIFY THAT THE POLICIES OF INSURANCE LISTED BELOW HAVE BEEN ISSUED TO THE INSURED NAMED ABOVE FOR THE POLICY PERIOD INDICATED. NOTWITHSTANDING ANY REQUIREMENT, TERM OR CONDITION OF ANY CONTRACT OR OTHER DOCUMENT WITH RESPECT TO WHICH THIS CERTIFICATE MAY BE ISSUED OR MAY PERTAIN, THE INSURANCE AFFORDED BY THE POLICIES DESCRIBED HEREIN IS SUBJECT TO ALL THE TERMS, EXCLUSIONS AND CONDITIONS OF SUCH POLICIES. LIMITS SHOWN MAY HAVE BEEN REDUCED BY PAID CLAIMS.

INSR LTR	TYPE OF INSURANCE	ADDL INSD	SUBR WVD	POLICY NUMBER	POLICY EFF (MM/DD/YYYY)	POLICY EXP (MM/DD/YYYY)	LIMITS	
A	X COMMERCIAL GENERAL LIABILITY	Y	Y	PLE66240405	1/31/2026	1/31/2027	EACH OCCURRENCE	$ 2,000,000
	CLAIMS-MADE X OCCUR						DAMAGE TO RENTED PREMISES (Ea occurrence)	$ 1,000,000
	X Pollution						MED EXP (Any one person)	$ 10,000
	GEN'L AGGREGATE LIMIT APPLIES PER:						PERSONAL & ADV INJURY	$ 2,000,000
	POLICY X PRO-JECT X LOC						GENERAL AGGREGATE	$ 4,000,000
	OTHER:						PRODUCTS - COMP/OP AGG	$ 4,000,000
							Per Project Max Agg	$ 10,000,000
B	AUTOMOBILE LIABILITY	Y	Y	CA6676889	5/1/2026	5/1/2027	COMBINED SINGLE LIMIT (Ea accident)	$ 2,000,000
	X ANY AUTO						BODILY INJURY (Per person)	$
	OWNED AUTOS ONLY / SCHEDULED AUTOS						BODILY INJURY (Per accident)	$
	X HIRED AUTOS ONLY / X NON-OWNED AUTOS ONLY						PROPERTY DAMAGE (Per accident)	$
								$
C	UMBRELLA LIAB X OCCUR	Y	Y	142000572	1/31/2026	1/31/2027	EACH OCCURRENCE	$ 3,000,000
	X EXCESS LIAB CLAIMS-MADE						AGGREGATE	$ 3,000,000
	DED RETENTION $							$
B	WORKERS COMPENSATION AND EMPLOYERS' LIABILITY Y/N	N/A	Y	LDS4069309	5/1/2026	5/1/2027	X PER STATUTE OTH-ER	
	ANYPROPRIETOR/PARTNER/EXECUTIVE OFFICER/MEMBER EXCLUDED? N (Mandatory in NH)						E.L. EACH ACCIDENT	$ 1,000,000
	If yes, describe under DESCRIPTION OF OPERATIONS below						E.L. DISEASE - EA EMPLOYEE	$ 1,000,000
							E.L. DISEASE - POLICY LIMIT	$ 1,000,000
A	Pest Control Operations Errors & Omissions			PLE66240405	1/31/2026	1/31/2027	Each Error/Omission Aggregate	$2,000,000 $4,000,000

DESCRIPTION OF OPERATIONS / LOCATIONS / VEHICLES (ACORD 101, Additional Remarks Schedule, may be attached if more space is required)
Auto Excess Liability Policy:
National Fire & Marine Insurance Company, Policy #42RLO34638601, Effective 1/31/26 to 1/31/27, Limit $2,000,000

Excess Liability Policies:
Allied World Assurance Company, Policy #03141554, Effective 1/31/26 to 1/31/27, Limit $5,000,000 Occurrence / $5,000,000 Aggregate
Colony Insurance Company, Policy #EXO4287007, Effective 1/31/26 to 1/31/27, Limit $5,000,000 Occurrence / $5,000,000 Aggregate
Canopius US Insurance, Policy #CUSUXS6000159, Effective 1/31/26 to 1/31/27, Limit $5,000,000 Occurrence / $5,000,000 Aggregate

See Attached...

CERTIFICATE HOLDER
Massey Services Inc.
315 Groveland St.
Orlando FL 32804

CANCELLATION
SHOULD ANY OF THE ABOVE DESCRIBED POLICIES BE CANCELLED BEFORE THE EXPIRATION DATE THEREOF, NOTICE WILL BE DELIVERED IN ACCORDANCE WITH THE POLICY PROVISIONS.

AUTHORIZED REPRESENTATIVE

© 1988-2015 ACORD CORPORATION. All rights reserved.



Detail by Entity Name

Florida Profit Corporation
MASSEY SERVICES, INC.

Filing Information

Document Number	H41017
FEI/EIN Number	59-2557150
Date Filed	02/05/1985
State	FL
Status	ACTIVE
Last Event	CORPORATE MERGER
Event Date Filed	12/17/2009
Event Effective Date	12/18/2009

Principal Address

315 GROVELAND STREET
ORLANDO, FL 32804

Changed: 03/18/2019

Mailing Address

315 GROVELAND STREET
ORLANDO, FL 32804

Changed: 11/22/2024

Registered Agent Name & Address

LOWMAN, WILLIAM R., JR., ESQ.
SHUFFIELD, LOWMAN & WILSON, PA
1000 LEGION PLACE, SUITE 1700
ORLANDO, FL 32801

Name Changed: 03/18/2019

Address Changed: 03/18/2019

Officer/Director Detail

Name & Address

Title Director, President, CEO

MASSEY, ANTHONY L.
315 GROVELAND STREET
ORLANDO, FL 32804

Title Secretary

Ewing, Linda
315 GROVELAND STREET
ORLANDO, FL 32804

Title Director, Executive Vice President, CFO

NOWRY, JEAN-MARIE
315 GROVELAND STREET
ORLANDO, FL 32804

Title Executive Vice President, Operations, COO

DOUGHERTY, EDWARD
315 GROVELAND STREET
ORLANDO, FL 32804

Title VP, Customer Service

Buhler, Jeffrey F.
315 GROVELAND STREET
ORLANDO, FL 32804

Title VP, Marketing

CHURCH, REBECCA
315 GROVELAND STREET
ORLANDO, FL 32804

Title VP, Quality Assurance

JONES, ADAM
315 GROVELAND STREET
ORLANDO, FL 32804

Title VP, Business Development

ROBINSON, IAN
315 GROVELAND STREET
ORLANDO, FL 32804

Title VP, Commercial Services

BEARD, RICK
315 GROVELAND STREET
ORLANDO, FL 32804

Title VP, Fleet & Assets

HERNANDEZ, HERIBERTO
315 GROVELAND STREET
ORLANDO, FL 32804

Title Director

MASSEY, CAROL A.
315 GROVELAND STREET
ORLANDO, FL 32804

Title Director, Senior VP

Massey-Farrell, Andrea L.
315 GROVELAND STREET
ORLANDO, FL 32804

Title VP, Finance & Accounting

BAUGH, MARCELLENE
315 GROVELAND STREET
ORLANDO, FL 32804

Title VP, Information Technology

SCHEINBERG, S. ADAM
315 GROVELAND STREET
ORLANDO, FL 32804

Title Regional VP

MILTON, JOHN
315 GROVELAND STREET
ORLANDO, FL 32804

Title Regional VP

GOETZ, JONATHAN
315 GROVELAND STREET
ORLANDO, FL 32804

Title Regional VP

Williams, Darlene
315 GROVELAND STREET
ORLANDO, FL 32804

Title VP, Technical & Training

JARZYNKA, TOM
315 GROVELAND STREET
ORLANDO, FL 32804

Title Division VP

Swanson, Tami
315 GROVELAND STREET
ORLANDO, FL 32804

Annual Reports

Report Year	Filed Date
2024	02/26/2024
2025	01/31/2025
2025	06/06/2025

Document Images

06/06/2025 -- AMENDED ANNUAL REPORT	View image in PDF format
01/31/2025 -- ANNUAL REPORT	View image in PDF format
02/26/2024 -- ANNUAL REPORT	View image in PDF format
03/06/2023 -- ANNUAL REPORT	View image in PDF format
03/07/2022 -- ANNUAL REPORT	View image in PDF format
09/17/2021 -- AMENDED ANNUAL REPORT	View image in PDF format
03/10/2021 -- ANNUAL REPORT	View image in PDF format
03/11/2020 -- ANNUAL REPORT	View image in PDF format
03/18/2019 -- ANNUAL REPORT	View image in PDF format

03/02/2018 -- ANNUAL REPORT	View Image in PDF format
03/13/2017 -- ANNUAL REPORT	View Image in PDF format
03/16/2016 -- ANNUAL REPORT	View Image in PDF format
02/04/2015 -- ANNUAL REPORT	View Image in PDF format
02/22/2014 -- ANNUAL REPORT	View Image in PDF format
03/28/2013 -- ANNUAL REPORT	View Image in PDF format
03/22/2012 -- ANNUAL REPORT	View Image in PDF format
03/22/2011 -- ANNUAL REPORT	View Image in PDF format
02/04/2010 -- ANNUAL REPORT	View Image in PDF format
12/17/2009 -- Merger	View Image in PDF format
12/10/2009 -- Amendment	View Image in PDF format
03/11/2009 -- ANNUAL REPORT	View Image in PDF format
03/18/2008 -- ANNUAL REPORT	View Image in PDF format
02/06/2007 -- ANNUAL REPORT	View Image in PDF format
06/14/2006 -- Amendment	View Image in PDF format
04/07/2006 -- ANNUAL REPORT	View Image in PDF format
01/21/2005 -- ANNUAL REPORT	View Image in PDF format
01/28/2004 -- ANNUAL REPORT	View Image in PDF format
04/14/2003 -- ANNUAL REPORT	View Image in PDF format
02/17/2002 -- ANNUAL REPORT	View Image in PDF format
02/01/2001 -- ANNUAL REPORT	View Image in PDF format
04/03/2000 -- ANNUAL REPORT	View Image in PDF format
03/01/1999 -- ANNUAL REPORT	View Image in PDF format
05/01/1998 -- ANNUAL REPORT	View Image in PDF format
03/17/1997 -- ANNUAL REPORT	View Image in PDF format
03/11/1996 -- ANNUAL REPORT	View Image in PDF format
03/14/1995 -- ANNUAL REPORT	View Image in PDF format

DO NOT ACCEPT UNLESS THIS DOCUMENT IS PRINTED WITH A COLOR BACKGROUND, CONTAINS A VOID PANTOGRAPH AND A MICROPRINT BORDER

CITY OF SOUTH DAYTONA
LOCAL BUSINESS TAX RECEIPT

SUBJECT TO
LOCAL BUSINESS
TAX RECEIPT ORDINANCE

VALID PERIOD: 10/01/2025 - 9/30/2026

Sc 07, 16, 21

ACCOUNT ID	RECEIPT NUMBER
5068	**5212**

BUSINESS CLASSIFICATION

CONTRACTING SERVICES
PEST CONTROL SERVICES
FL DOAC REG #JB174209
SIGNS UNDER 15 S.F. (1)
SIGNS OVER 15 S.F. (1)

AMOUNT DUE:	IF PAID BY:
$116.00	**SEPT. 30**
$127.60	10/01/2025
$133.40	11/01/2025
$139.20	12/01/2025
$145.00	01/03/2026

LOCATION

1801 SOUTH NOVA ROAD #110

ISSUED TO

MASSEY SERVICES INC.
315 GROVELAND STREET
ORLANDO,FL 32804

BUSINESS TAX ADMINISTRATOR

POST IN CONSPICUOUS PLACE AT BUSINESS LOCATION

CITY OF SOUTH DAYTONA
LOCAL BUSINESS TAX RECEIPT

SUBJECT TO
LOCAL BUSINESS
TAX RECEIPT ORDINANCE

VALID PERIOD: 10/01/2025 - 9/30/2026

ACCOUNT ID	RECEIPT NUMBER
5068	**5212**

BUSINESS CLASSIFICATION

CONTRACTING SERVICES
PEST CONTROL SERVICES
FL DOAC REG #JB174209
SIGNS UNDER 15 S.F. (1)
SIGNS OVER 15 S.F. (1)

AMOUNT DUE:	IF PAID BY:
116.00	**SEPT. 30**
127.60	10/01/2025
133.40	11/01/2025
139.20	12/01/2025
145.00	01/03/2026

LOCATION

1801 SOUTH NOVA ROAD #110

ISSUED TO

MASSEY SERVICES INC.
315 GROVELAND STREET
ORLANDO,FL 32804

BUSINESS TAX ADMINISTRATOR

OFFICE COPY ONLY

State of Florida
Florida Department of Agriculture and Consumer Services
Bureau of Licensing and Enforcement

CERTIFIED PEST CONTROL OPERATOR

Certificate Number: JF7606

Jeff Tyrcha

This is to certify that the individual named above is a Certified Pest Control Operator and is privileged to practice

Fumigation,General Household Pest and Rodent Control,Lawn and Ornamental,Termite and Other WDO Control

in conformity with an Act of the Legislature of the State of Florida regulating the practice of Pest Control and imposing penalties for violations.

WILTON SIMPSON
Commissioner of Agriculture

Issue Date: 05/20/2026

Expiration Date: 06/01/2027

Florida Department of Agriculture and Consumer Services
Bureau of Licensing and Enforcement
ID CARD # JE506363

Monroig, Carlos
MASSEY SERVICES INC
MASSEY GREENUP
LANDSCAPE SERVICES
MASSEY PREVENTECH

Endorsements

Issued: 03/06/2026 **Expires:** 12/31/2026

S DAYTONA, FL 32119

Signature of ID Cardholder

WILTON SIMPSON, COMMISSIONER

The above individual is registered under the provisions of Chapter 482, F.S

Florida Department of Agriculture and Consumer Services

Category/Endorsement Key

FID	Fumigation Endorsement
WDO INSP	Wood Destroying Organism Inspector
CO FUM	COIC with Fumigation
CO WDO	COIC with Termites and Other WDO
CO GHP	COIC with General Household Pest
CO LAWN	COIC with Lawn and Ornamental

Florida Department of Agriculture and Consumer Services
Bureau of Licensing and Enforcement
ID CARD # JE312667

GUEVARA, DAKOTA
MASSEY SERVICES INC
MASSEY GREENUP
LANDSCAPE SERVICES
MASSEY PREVENTECH

Endorsements

Issued: 12/10/2025 **Expires:** 12/31/2026

S DAYTONA, FL 32119

Signature of ID Cardholder

WILTON SIMPSON, COMMISSIONER

The above individual is registered under the provisions of Chapter 482, F.S.

Florida Department of Agriculture and Consumer Services

Category/Endorsement Key

FID	Fumigation Endorsement
WDO INSP	Wood Destroying Organism Inspector
CO FUM	COIC with Fumigation
CO WDO	COIC with Termites and Other WDO
CO GHP	COIC with General Household Pest
CO LAWN	COIC with Lawn and Ornamental

Florida Department of Agriculture and Consumer Services
Bureau of Licensing and Enforcement
ID CARD # JE209595

FAZIO, JOHN
MASSEY SERVICES INC
MASSEY GREENUP
LANDSCAPE SERVICES
MASSEY PREVENTECH

Endorsements

Issued: **12/10/2025** **Expires:** **12/31/2026**

S DAYTONA, FL 32119

Signature of ID Cardholder

WILTON SIMPSON, COMMISSIONER

The above individual is registered under the provisions of Chapter 482, F.S.

Florida Department of Agriculture and Consumer Services

Category/Endorsement Key

FID	Fumigation Endorsement
WDO INSP	Wood Destroying Organism Inspector
CO FUM	COIC with Fumigation
CO WDO	COIC with Termites and Other WDO
CO GHP	COIC with General Household Pest
CO LAWN	COIC with Lawn and Ornamental

Florida Department of Agriculture and Consumer Services
Bureau of Licensing and Enforcement
CERTIFIED PEST CONTROL OPERATOR
Certificate # JF7606

Tyrcha, Jeff
20 Appaloosa Lane
Ormond Beach, FL 32174

Categories
FUM,GHP,LAWN,
WDO

Issued: 05/20/2026

Expires: 06/01/2027

Signature of Certificate Holder

WILTON SIMPSON, COMMISSIONER

The above individual is certified under the provisions of Chapter 482, F.S.

Florida Department of Agriculture and Consumer Services

Category Key

FUM	Fumigation
WDO	Termites and Other Wood-Destroying Organisms
GHP	General Household Pest
LAWN	Lawn and Ornamental

Line Item	Description	Quantity	Unit of Measure	Total
1	Qtrly Pest Service Total	1	Per Year	$21,400.00
2	Annual Termite Service Total	1	Per Year	$20,445.50
3	Rodent	1	Per Year	$1,800.00
	Total Annual Cost			**$43,645.50**

CERTIFICATE OF LIABILITY INSURANCE

DATE (MM/DD/YYYY): 6/8/2026

THIS CERTIFICATE IS ISSUED AS A MATTER OF INFORMATION ONLY AND CONFERS NO RIGHTS UPON THE CERTIFICATE HOLDER. THIS CERTIFICATE DOES NOT AFFIRMATIVELY OR NEGATIVELY AMEND, EXTEND OR ALTER THE COVERAGE AFFORDED BY THE POLICIES BELOW. THIS CERTIFICATE OF INSURANCE DOES NOT CONSTITUTE A CONTRACT BETWEEN THE ISSUING INSURER(S), AUTHORIZED REPRESENTATIVE OR PRODUCER, AND THE CERTIFICATE HOLDER.

IMPORTANT: If the certificate holder is an ADDITIONAL INSURED, the policy(ies) must have ADDITIONAL INSURED provisions or be endorsed. If SUBROGATION IS WAIVED, subject to the terms and conditions of the policy, certain policies may require an endorsement. A statement on this certificate does not confer rights to the certificate holder in lieu of such endorsement(s).

PRODUCER
McGriff, a MMA LLC Company
485 N. Keller Road Suite 551
Maitland FL 32751

CONTACT NAME: Karie L. Evans
PHONE (A/C, No, Ext): 407-691-9600 FAX (A/C, No): 888-635-4183
E-MAIL ADDRESS: MCG.CertOrlando@MarshMMA.com

INSURER(S) AFFORDING COVERAGE	NAIC #
INSURER A : Great American Risk Solutions Surplus	35351
INSURER B : Safety National Casualty Corporation	15105
INSURER C : QBE Specialty Insurance Company	11515
INSURER D :	
INSURER E :	
INSURER F :	

INSURED 131MASSESER
Massey Services, Inc.
315 Groveland Street
Orlando FL 32804

COVERAGES **CERTIFICATE NUMBER:** 1114878882 **REVISION NUMBER:**

THIS IS TO CERTIFY THAT THE POLICIES OF INSURANCE LISTED BELOW HAVE BEEN ISSUED TO THE INSURED NAMED ABOVE FOR THE POLICY PERIOD INDICATED. NOTWITHSTANDING ANY REQUIREMENT, TERM OR CONDITION OF ANY CONTRACT OR OTHER DOCUMENT WITH RESPECT TO WHICH THIS CERTIFICATE MAY BE ISSUED OR MAY PERTAIN, THE INSURANCE AFFORDED BY THE POLICIES DESCRIBED HEREIN IS SUBJECT TO ALL THE TERMS, EXCLUSIONS AND CONDITIONS OF SUCH POLICIES. LIMITS SHOWN MAY HAVE BEEN REDUCED BY PAID CLAIMS.

INSR LTR	TYPE OF INSURANCE	ADDL INSD	SUBR WVD	POLICY NUMBER	POLICY EFF (MM/DD/YYYY)	POLICY EXP (MM/DD/YYYY)	LIMITS	
A	X COMMERCIAL GENERAL LIABILITY	Y	Y	PLE66240405	1/31/2026	1/31/2027	EACH OCCURRENCE	$ 2,000,000
	CLAIMS-MADE X OCCUR						DAMAGE TO RENTED PREMISES (Ea occurrence)	$ 1,000,000
	X Pollution						MED EXP (Any one person)	$ 10,000
	GEN'L AGGREGATE LIMIT APPLIES PER:						PERSONAL & ADV INJURY	$ 2,000,000
	POLICY X PRO-JECT X LOC						GENERAL AGGREGATE	$ 4,000,000
	OTHER:						PRODUCTS - COMP/OP AGG	$ 4,000,000
							Per Project Max Agg	$ 10,000,000
B	AUTOMOBILE LIABILITY	Y	Y	CA6676889	5/1/2026	5/1/2027	COMBINED SINGLE LIMIT (Ea accident)	$ 2,000,000
	X ANY AUTO						BODILY INJURY (Per person)	$
	OWNED AUTOS ONLY / SCHEDULED AUTOS						BODILY INJURY (Per accident)	$
	X HIRED AUTOS ONLY / X NON-OWNED AUTOS ONLY						PROPERTY DAMAGE (Per accident)	$
								$
C	UMBRELLA LIAB X OCCUR	Y	Y	142000572	1/31/2026	1/31/2027	EACH OCCURRENCE	$ 3,000,000
	X EXCESS LIAB CLAIMS-MADE						AGGREGATE	$ 3,000,000
	DED RETENTION $							$
B	WORKERS COMPENSATION AND EMPLOYERS' LIABILITY Y/N	N/A	Y	LDS4069309	5/1/2026	5/1/2027	X PER STATUTE OTH-ER	
	ANYPROPRIETOR/PARTNER/EXECUTIVE OFFICER/MEMBER EXCLUDED? N (Mandatory in NH)						E.L. EACH ACCIDENT	$ 1,000,000
	If yes, describe under DESCRIPTION OF OPERATIONS below						E.L. DISEASE - EA EMPLOYEE	$ 1,000,000
							E.L. DISEASE - POLICY LIMIT	$ 1,000,000
A	Pest Control Operations Errors & Omissions			PLE66240405	1/31/2026	1/31/2027	Each Error/Omission Aggregate	$2,000,000 $4,000,000

DESCRIPTION OF OPERATIONS / LOCATIONS / VEHICLES (ACORD 101, Additional Remarks Schedule, may be attached if more space is required)
Auto Excess Liability Policy:
National Fire & Marine Insurance Company, Policy #42RLO34638601, Effective 1/31/26 to 1/31/27, Limit $2,000,000

Excess Liability Policies:
Allied World Assurance Company, Policy #03141554, Effective 1/31/26 to 1/31/27, Limit $5,000,000 Occurrence / $5,000,000 Aggregate
Colony Insurance Company, Policy #EXO4287007, Effective 1/31/26 to 1/31/27, Limit $5,000,000 Occurrence / $5,000,000 Aggregate
Canopius US Insurance, Policy #CUSUXS6000159, Effective 1/31/26 to 1/31/27, Limit $5,000,000 Occurrence / $5,000,000 Aggregate

See Attached...

CERTIFICATE HOLDER
Massey Services Inc.
315 Groveland St.
Orlando FL 32804

CANCELLATION
SHOULD ANY OF THE ABOVE DESCRIBED POLICIES BE CANCELLED BEFORE THE EXPIRATION DATE THEREOF, NOTICE WILL BE DELIVERED IN ACCORDANCE WITH THE POLICY PROVISIONS.

AUTHORIZED REPRESENTATIVE

© 1988-2015 ACORD CORPORATION. All rights reserved.

Flagler County Board of County Commissioners
Office of Procurement and Contracts
E. John Brower MBA, CGFO, CPM, Director
1769 East Moody Boulevard | Building 2, Bunnell, FL 32110

BID TABULATION

ITB No. 26-ITB-020

Pest Control Services

RESPONSE DEADLINE: August 20, 2026 at 2:00 pm

SELECTED VENDOR TOTALS

Vendor	Total
Massey Services	$43,893.00
XL Eagle LLC	$83,710.00
Pro Care Lawn and Pest	$203,340.00

PEST CONTROL SERVICES

Enter the Total Annual Cost from each section of the Bid Worksheet provided in the Vendor Questionnaire, Section 7 (2.17).

Vendor	Total
Massey Services	$43,645.50
XL Eagle LLC	$83,375.00
Pro Care Lawn and Pest	$203,025.00

MISCELLANEOUS

Vendor	Total
Massey Services	$247.50
Pro Care Lawn and Pest	$315.00
XL Eagle LLC	$335.00

Flagler County Board of County Commissioners
Office of Procurement & Contracts
E. John Brower MBA, CGFO, CPM, Director
1769 East Moody Boulevard | Building 2, Bunnell, FL 32110
(386) 313-4008

NOTICE OF INTENT TO AWARD

ITB No. 26-ITB-020 - Pest Control Services

RESPONSE DEADLINE: August 20, 2026 at 2:00 pm

Tuesday, September 1, 2026

Thank you for submitting a bid in response to 26-ITB-020 for Pest Control Services. Flagler County has evaluated all submittals received in response to solicitation and intends to award a contract to Massey Services.

Protest Process

Notification

The Office of Procurement and Contracts shall post all recommendations of award available for review by the public on the Flagler County website. Vendors who submit a solicitation will be notified by e-mail.

Notice of Intent to File a Protest

1. A respondent adversely affected by an intended decision or action with respect to the initial award on a solicitation shall file a written notice of intent to file a protest. That notice of intent to file a protest must be filed with the Procurement and Contract Services Manager or his/her designee no later than four o'clock (4:00) p.m. on the third (3rd) business day following the date of the notice of the recommendation of award.

2. In addition, a protest bond in the form of a U.S. Postal Service money order or by a certified cashier's check in an amount equal to one percent (1%) of the value of the solicitation, but in no case less than five hundred dollars ($500), nor greater than five thousand dollars ($5,000), payable to the Flagler County Board of County Commissioners must be delivered with the written notice of intent to file a protest. Failure to post such bond shall result in the Protest being dismissed by the Procurement and Contract Services Manager or his/her designee.

3. The notice of intent to file a protest must:

a. Identify the action being protested.
b. Clearly state the basis of the protest, and
c. Clearly state that its purpose is to serve as the notice of intent to file a protest.

4. Failure to provide the proper notice and/or failure to provide the required protest bond shall constitute a waiver of the right to seek any remedy provided under the protest procedure. Once again thank you for participating in this solicitation and for your interest in doing business with Flagler County.

Further information on our protest policy can be found at https://www.flaglercounty.gov/Government/Departments/Financial-Services/Office-of-Procurement-and-Contracts-OPC/Resources, under Procurement Manual.

Sincerely,

Kelly Bowman, NIGP-CPP, CPPB
Senior Procurement Analyst
Office of Procurement and Contracts
Flagler County Board of County Commissioners

Flagler County Board of County Commissioners
Consent: BOCC Departments / Agenda Item 7.i.

Meeting Date:	October 5, 2026
Department Contact:	Hamid Tabassian, County Engineer, Damon Douglas, Coastal Management Program Manager
Subject:	**Approval of the Twenty-third Amendment to the Professional Services Agreement 14-032Q between Flagler County and Foth Infrastructure and Environment, LLC, for Coastal Engineering Services for Permit Modification to Support the Use of an Offshore Sand Source for Future Hammock Dunes Owners Association Dune Restoration Projects.**

Overview/Summary:
Flagler County has a Dune Maintenance Agreement with the Hammock Dunes Owners Association (HDOA) dated August 18, 2025, for the County to provide dune restoration and associated services and the HDOA to provide $570,000.00 per year to the County towards the services.

The HDOA has asked the County to permit an offshore sand source to be useable in future projects as an alternative to sand sourced from upland mines. The County and HDOA have coordinated efforts to request the attached proposal from Foth to modify the FDEP and USACE permits and the BOEM Borrow Area Lease to dredge sand from an offshore borrow area, named 3A, temporarily stockpile the sand on the northern end of Reach II, and truck the sand from the stockpile and place it on the dunes at Hammock Dunes. The 3A borrow area is the same site used by the USACE for the Flagler County Coastal Storm Risk Management Project in Flagler Beach and will be used by the County for the Reach II Beach Nourishment Project (approved August 3, 2026).

The stockpile and transport option can potentially realize substantial savings as opposed to the use of sand trucked overland from inland mines, if performed in conjunction with a nearby dredge project that is contributing to the mobilization cost for the dredge equipment.

Considering Foth provided the Coastal Engineering support to permit both the previous Hammock Dunes project and the Reach II permits, including managing the environmental and cultural resource evaluations required for regulatory approval, it is recommended that an Amendment to the Foth contract for $148,984.00 be approved to amend the scope of work and fee for Professional Services, as described in the attachment “Exhibit A”.

Strategic Plan:
Focus Area: Growth and Infrastructure
Goal 2 - Protect and Manage Natural Resources

Objective EV 2.1.1: Protect and renourish the dunes/beaches

Funding Information:
Funding will be appropriated during the annual carry forward process within the Tourist Development Beach Fund 1111. The HDOA Contribution has a current balance of $570,000 and will be used to fund the $148,984.00 for the Amendment.

Recommendations:
Staff recommends that the Board approve the Twenty-third Amendment to Professional Services Agreement 14-032Q with Foth Infrastructure and Environment, LLC, for $148,984.00.

Attachments:
1. Foth - Twenty-third Amendment

TWENTY-THIRD AMENDMENT TO AN AGREEMENT BETWEEN FLAGLER COUNTY AND FOTH INFRASTRUCTURE & ENVIRONMENT, LLC, FOR PROFESSIONAL SERVICES FOR COASTAL ENGINEERING

FLAGLER COUNTY PROJECT RSQ NO. 17-032Q

Flagler County, a political subdivision of the State of Florida (COUNTY), and Foth Infrastructure & Environment, LLC, a Wisconsin limited liability company (CONSULTANT), (collectively, COUNTY and CONSULTANT are hereinafter referred to as PARTIES) hereby enter into this Twenty-Third Amendment to the Agreement executed on the date hereupon entered.

WHEREAS, the PARTIES have entered into an Agreement for Professional Coastal Engineering services, as defined in the project contract document dated February 8, 2019 (Agreement); and

WHEREAS, Hammock Dunes Owners Association (HDOA) has an Perpetual Easement Agreement, dated May 18, 2023, for COUNTY to perform beach and dune restoration and nourishment activities on their beach with HDOA'S financial contribution; and

WHEREAS, the HDOA has requested COUNTY amend the Agreement to include engineering support to modify the Florida Department of Environmental Protection (FDEP) Joint Coastal Permit (JCP) and U.S. Army Corps of Engineers (USACE) permits (Permit Nos. 0405821-001-JC and SAJ-2017-01052) and to provide Bureau of Ocean Energy Management (BOEM) offshore lease negotiation assistance to allow the use of sand from offshore Borrow Area 3A, currently permitted for the USACE Flagler County Coastal Storm Risk Management Project and the Flagler County Reach II Beach Nourishment Project, as an additional sediment source for the construction and maintenance of a dune along the Hammock Dunes shoreline (FDEP Coastal Range Monuments R-35.1 to R-47.9); and

WHEREAS, the PARTIES desire to amend the Agreement to include engineering support for the permitting of the additional sand source for Hammock Dunes.

NOW, THEREFORE, FOR GOOD AND VALUABLE CONSIDERATION, WHICH THE PARTIES AGREE IS ADEQUATE, THE PARTIES AGREE TO THE FOLLOWING:

ITEM NO. 1: The above recitals are incorporated herein.

ITEM NO. 2: The Agreement is hereby amended to include the addition of engineering services for permitting the use of the Borrow Area 3A sand source for the construction and maintenance of a dune along the shoreline between FDEP Coastal Range Monuments R-35.1 to R-47.9, as are described in Exhibit "A," which is attached hereto and made a binding part hereof by this reference. The fee for the additional services is in the amount of $148,984.00, as identified in Exhibit "B", attached hereto and made a part hereof.

ITEM NO. 3: This Amendment must be accepted by the CONSULTANT and must be approved by COUNTY to become effective.

ITEM NO. 4 Except as expressly modified herein, all Terms and Conditions of the original Agreement as previously amended shall remain unmodified and shall remain in full force and effect.

ITEM NO. 5: No change to the total overall duration of the Agreement is made with this Amendment.

[THIS SPACE INTENTIONALLY LEFT BLANK]

The total revised cost and project design duration are summarized below:

	AMOUNT	**TIME**
Total Contract, prior to this Amendment (No. 23):	$4,456,157.00	Active contract period from Notice to Proceed
Total This Amendment:	$148,984.00	UNCHANGED
New Contract Value, including this Amendment	$4,605,141.00	Active contract period

[Signature Pages to Follow]

ACCEPTANCE: **(CONSULTANT)**
I (We) agree to perform the work required by this Amendment No. 23 for the amount and within the time allocated all in accordance with Contract Document Agreement.

NAME: Foth Infrastructure & Environment, LLC

WITNESS:_____
(Signature)

_____
(Typed or Printed)

BY: _____
(Signature)

_____
(Typed/Printed Name & Title)

Date:_____

[Signature Page to Follow]

RECOMMENDED BY:
Flagler County Engineering Dept.

_____
Hamid Tabassian, County Engineer

APPROVED AS TO FORM:
Flagler County Legal Dept.

Sean S. Moylan Digitally signed by Sean S. Moylan Date: 2026.09.22 14:54:21 -04'00'
Sean S. Moylan, Deputy County Attorney

APPROVED: FLAGLER COUNTY

BY: _____
Adam Mengel, Interim County Administrator

_____
(Date)

(Exhibit "A" to Follow)

EXHIBIT A
SCOPE OF WORK

Coastal Engineering Consulting Services Proposal
Hammock Dunes Dune Restoration Project – Permit Modification to Support the Use of an Offshore Sand Source, Flagler County, FL
(TO 2019-23)

Scope Prepared by:
Foth Infrastructure & Environment, LLC (Foth)
501 Riverside Avenue, Suite 801
Jacksonville, FL 32202
(904) 387-6114

Overview & Purpose

Flagler County ("County") has requested that Foth Infrastructure & Environment, LLC ("Consultant") prepare a proposal to provide coastal engineering, environmental, and regulatory consulting services to develop a permit-level, temporary offshore-sand stockpile design and support modifications to the existing authorizations for the Hammock Dunes Dune Restoration Project.

The Hammock Dunes project area extends approximately 2.3 miles along the Hammock Dunes shoreline between Jungle Hut Road Park, near R-35.1, and Varn Park, near R-47.9. The purpose of the proposed work is to establish a regulatory pathway for temporary stockpiling, rehandling, transportation, and placement of offshore-sourced sand for future dune restoration activities within the existing authorized project area.

The proposed concept generally consists of dredging sand from an authorized offshore borrow source, hydraulically placing the material to create a temporary beach stockpile, allowing the material to dewater, mechanically loading the material into off-road trucks, transporting the material along the beach, and placing the material within the existing permitted dune fill template. Final dune fill placement is anticipated to occur within the existing, permitted template, entirely above the Mean High Water Line, with no direct hydraulic placement within the dune restoration template.

The existing Hammock Dunes authorizations evaluated the use of upland-mined sand for dune restoration but did not evaluate the temporary stockpiling and rehandling of offshore-sourced material. Accordingly, modifications to the applicable State and Federal authorizations and additional environmental review are anticipated.

The Consultant will provide engineering, environmental, and regulatory support services necessary to establish a viable pathway for the future use of offshore-sourced sand within the Hammock Dunes Dune Restoration Project. Services will include development of a permit-level

temporary stockpile concept; preparation of engineering and technical documentation to support modification of applicable Florida Department of Environmental Protection (FDEP), United States Army Corps of Engineers (USACE), and Bureau of Ocean Energy Management (BOEM) authorizations; coordination with regulatory and resource agencies; and preparation of environmental documentation necessary to support National Environmental Policy Act (NEPA) compliance and associated Federal agency actions.

Assumptions, Clarifications, and Exclusions

The Consultant has prepared this Scope of Work based upon the following understanding, assumptions, and conditions.

1) The project Scope will seek to modify FDEP permit 0405821-001-JC and USACE permit SAJ-2017-01052. The existing BOEM Lease for the County's Reach 2 project, OCS-A 0572, will also be considered for amendment.

2) The existing FDEP and USACE authorizations support dune restoration within the Hammock Dunes project area utilizing only upland-mined sand. Modifications to these permits are required to accommodate the proposed offshore sand source, temporary stockpile and dewatering, and associated handling and transport activities.

3) The proposed concept is to use offshore material from the Flagler County Borrow Area, which is currently authorized for the County's Reach 2 project under BOEM Lease OCS-A 0572. Material would be pumped from a hopper dredge to a temporary stockpile, dewatered, loaded into offroad trucks, transported along the beach, and placed within the existing, permitted dune fill template. Borrow Area 3A is assumed to contained sufficient volume for stockpiling purposes without modification.

4) The Scope of the project to be designed, evaluated, and ultimately included in the permit modifications will seek to avoid impacts to beach and nearshore hardbottom resources.

5) This Scope does not include any tasks related to development of a compensatory mitigation plan since the project design will be based on complete avoidance of potential adverse impacts to nearshore hardbottom resources.

6) The temporary stockpile concept will be developed to a permit-level of detail sufficient to support agency review and authorization modifications. Preparation of final design documents, issue-for-bid plans and specifications, and construction-level design is not included in this Scope of Work.

7) This Scope assumes no modifications to the existing Hammock Dunes dune fill renourishment template except for revisions needed to illustrate the stockpile, access, handling sequence, and related work limits.

8) This Scope assumes preparation of an Environmental Assessment (EA). Based on currently available information and preliminary agency coordination for the project, preparation of a standalone Biological Assessment (BA) is not anticipated, and the project is expected to rely on existing biological data, published scientific data, and existing consultation documents. The EA can serve as the Essential Fish Habitat (EFH) assessment for the project under the Magnuson-Stevens Fishery Conservation and Management Act, provided that the document satisfies all criteria of the Act. Similarly, the listed species sections of the EA must follow the statutory and regulatory requirements for a BA and examine all direct, indirect, and cumulative effects to listed species and/or critical habitat to serve as a Section 7 compliant BA. If any resource protection agency determines that preparation of a standalone Biological Assessment and ESA Section 7 consultation package, Essential Fish Habitat (EFH) assessment, or other supplemental biological documentation are required, such services shall constitute additional services beyond this Scope. This scope also assumes that all work will be conducted in accordance with the applicable programmatic Biological Opinions issued by the United States Fish and Wildlife Service (USFWS) and National Marine Fisheries Service (NMFS).

9) This Scope assumes reliance on existing biological, hardbottom, cultural resource, bathymetric, topographic, and environmental datasets provided by the County or otherwise made available to the Consultant. Furthermore, it is assumed that the data collected, by other consultants, to support the County's Reach 3 project will be sufficient to satisfy analysis requirements and agency review of these permit modifications. The collection of new environmental, archaeological, geotechnical, hydrographic, or ecological field data is not currently authorized for this Scope of Work.

10) Regulatory agency review may identify additional surveys, modeling, environmental studies, biological consultation, or documentation beyond the work described herein. Any such additional requirements beyond the scope of this proposal will constitute additional services, will require additional budget, and will be identified for County authorization before proceeding.

11) This Scope assumes two (2) consolidated rounds of Requests for Additional Information (RAIs) and agency review comments. Additional RAI cycles requiring substantial revisions, new analyses, new alternatives evaluations, additional environmental documentation, or expanded agency consultation shall constitute additional services.

12) The Consultant assumes that the County will serve as the sole point of direction and authorization for services performed under this Task Order. While third-party stakeholders may participate in discussions regarding the project, all requests, instructions, approvals, and decisions affecting the Scope of Work or Consultant services shall be communicated through and authorized by the County.

Task 1: Project Modification Engineering and Formulation (Temporary Stockpile) (Lump Sum)

The Consultant shall perform the engineering and project-formulation services necessary to establish a permit-level temporary stockpile concept for inclusion in the permit modification applications and environmental documentation. The engineering analysis will integrate stockpile siting, capacity, construction methodology, dewatering, material rehandling, access, truck circulation, environmental constraints, and compatibility with anticipated beach nourishment operations.

The Consultant shall:

- Review available project information and establish the preliminary stockpile dimensions, volume, operational requirements, and permit-level design criteria.
- Review available information from comparable temporary beach stockpile projects to identify applicable design considerations, construction approaches, operational constraints, environmental measures, and lessons learned for incorporation into the Hammock Dunes permit-level stockpile concept.
- Develop the recommended permit-level stockpile concept, including its location, footprint, approximate geometry and capacity, typical sections, dewatering approach, access, truck circulation, loading area, temporary work limits, construction sequence, and site restoration.
- Evaluate construction sequencing implications related to stockpile capacity and rehandling/trucking productivity to transport stockpiled material to the dune fill placement areas.
- Evaluate potential effects of the temporary stockpile, associated construction activities, and material-hauling operations on public beach use and access. The evaluation shall consider temporary restrictions to pedestrian and vehicular access, recreational use, access points, safety considerations, travel corridors, and operational measures that could be implemented to minimize disruptions during stockpile construction, use, and removal.
- Coordinate with County and Hammock Dunes to discuss constraints and scope of the final location and size of the stockpile prior to submitting modification request.

The evaluation will consider a reasonable worst-case condition in which hydraulic placement or grading is required to establish a temporary working pad, including conditions with and without an existing beach berm. Stockpile location and extent will be established before the environmental effects and permit modification requirements are finalized.

Deliverables: Permit-level stockpile design; design basis memorandum; and preliminary stockpile capacity estimate in electronic PDF format within thirty (30) business days of Notice to Proceed. Coordination meeting with County and Hammock Dunes for final stockpile configuration and location.

Task 2: Permit Modification Preparation & Agency Coordination (Lump Sum)

The Consultant shall prepare the engineering and technical materials required to support modification of the applicable FDEP, USACE, and BOEM authorizations for the proposed stockpile and transfer use of offshore-sourced sand within the Hammock Dunes project area.

The Consultant shall:

- Confirm the applicable authorization framework and anticipated modification requirements with FDEP, USACE, BOEM, and appropriate resource agencies.
- Prepare the project description, permit drawings, quantities, construction sequence description, avoidance and minimization measures, and other technical information necessary to support modification of FDEP Permit 0405821-001-JC, USACE Permit SAJ-2017-01052, and support the County with BOEM Lease negotiations for the amendment or other action under BOEM Lease OCS-A 0572.
- Participate in coordination meetings with regulatory and resource agencies to discuss project formulation, authorization requirements, permitting strategy, environmental documentation needs, and other considerations necessary to support preparation of the permit modification applications.

The permit materials will describe the offshore sand source, hydraulic delivery, temporary stockpile, typical method of hydraulic delivery, dewatering, mechanical rehandling, truck transport, dune placement, temporary work limits, and restoration of the stockpile area.

Deliverables: Draft and final permit modification documents (FDEP, USACE, and BOEM) in electronic PDF format within twenty (20) business days of completion of Task 1.

Task 3: Environmental Assessment and NEPA Document Preparation (Lump Sum)

The Consultant and their qualified marine environmental professional Subconsultant shall prepare an Environmental Assessment (EA) and supporting environmental documentation for the proposed federal actions within the Hammock Dunes project area. The proposed project modifications will require preparation and processing of an Environmental Assessment (EA) to support compliance with the National Environmental Policy Act (NEPA) and other applicable federal environmental review requirements associated with the proposed action.

The Environmental Assessment will evaluate the potential direct, indirect, and cumulative effects of the proposed action, including project-specific elements not previously analyzed, such as temporary stockpile construction and operation, dewatering, material rehandling, and truck hauling, and their potential effects on biological resources, water quality, air quality, recreation, cultural resources, and other applicable environmental resources.

The Consultant, with the Subconsultant, shall:

- Coordinate with the environmental Subconsultant by providing project design information, available survey data, project assumptions, and other supporting technical information necessary to evaluate the potential environmental effects of the proposed action and prepare the required environmental documentation.
- Review available environmental documents, surveys, biological consultation materials, cultural resource information, and prior analyses applicable to the proposed action.
- Evaluate the proposed project area and affected environment to identify potential direct, indirect, and cumulative effects of the proposed action.
- Identify applicable environmental commitments and avoidance and minimization measures.
- Prepare Draft and Final Environmental Assessment documents for agency consideration.
- Coordinate with the federal agencies and respond to consolidated comments on the environmental documents.

Deliverables: Draft Environmental Assessments in electronic PDF format within sixty (60) business days of completion of Task 1. Final Environmental Assessment to be provided in electronic PDF format following regulatory agency comment, coordination, and acceptance.

Task 4: Responses to Permitting Requests for Additional Information (Lump Sum)

Following submittal of the permit modification applications and supporting environmental documentation, the Consultant shall provide technical support to address up to two (2) Requests for Additional Information (RAIs), review comments, and other information requests received from the regulatory agencies during the permit review process.

The Consultant shall:

- Review and evaluate Requests for Additional Information (RAIs), review comments, and other information requests received from the Florida Department of Environmental Protection (FDEP), U.S. Army Corps of Engineers (USACE), Bureau of Ocean Energy Management (BOEM), and other participating resource agencies.
- Coordinate with County staff and the environmental Subconsultant to develop responses to agency comments and information requests.
- Prepare written responses to agency Requests for Additional Information utilizing project information, analyses, and data developed under this Scope of Work.
- Provide supplemental narrative descriptions, clarifications, supporting calculations, figures, permit drawings, and brief technical analyses necessary to address agency comments and demonstrate compliance with applicable permitting requirements.

- Revise permit drawings, project descriptions, environmental documentation, and other application materials, as necessary, to address agency comments and facilitate permit review.
- Review draft permit conditions and permit documents and provide comments, suggested revisions, and technical recommendations to the County prior to permit issuance.

The RAI response effort is limited to clarification of application materials, use of existing information, and incorporation of analyses developed under this Scope of Work. Additional field investigations, resource surveys, numerical modeling, engineering analyses, biological studies, cultural resource investigations, mitigation planning, or other activities not specifically described herein are not included and shall constitute additional services if requested by the agencies. Regulatory agencies may identify additional information needs during application review that cannot be satisfied using information currently available or developed under this Task Order.

Deliverables: Draft and final RAI response packages, revised permit application materials (if required), and comments on draft permit conditions in electronic PDF format. within fifteen (15) business days of receipt of RAI requests from regulatory agencies.

Task 5: Allowance for Biological Assessment (BA), County Reach 2 Permit Modifications for Stockpile, and Additional RAI Responses (Authorization Withheld, Not-To-Exceed)

An allowance is provided for preparation of a standalone Biological Assessment (BA). If a Federal agency determines that a standalone BA is required, the Consultant and its qualified marine environmental professional Subconsultant shall, upon written authorization from the County, prepare Draft and Final BA documents using existing project information and available environmental data. This task does not include new field investigations, surveys, modeling, mitigation planning, or other supplemental studies.

This allowance provides for regulatory coordination and potential modification of the County's Reach 2 permits, including FDEP Permit No. 0379716-003-JM and USACE Permit No. SAJ-2019-02065, as may be necessary to authorize the proposed stockpile and material rehandling approach. The need for, nature of, and extent of any permit modifications will be determined through execution of this Scope and coordination with the applicable regulatory agencies.

This allowance also provides for responses to Requests for Additional Information (RAIs) or consolidated agency comment rounds beyond the two rounds included under Task 4. Upon written authorization from the County, the Consultant shall prepare responses and revise applicable permit, engineering, and environmental documents using existing information and analyses developed under this Scope of Work. This task is limited exclusively to the standalone Biological Assessment, stockpile modification of County Reach 2 permits, and additional RAI responses described above and does not authorize any other services.

Deliverables: Draft and Final Biological Assessment in electronic PDF format. Draft and final Reach 2 permit modification documents (FDEP, USACE) in electronic PDF format. Draft and final RAI response packages and revised permit application materials (if required).

Compensation

Exhibit B provides Lump Sum compensation summary details for the works described herein.

EXHIBIT B
COST SUMMARY and DETAILS

Coastal Engineering Consulting Services Proposal
Hammock Dunes Dune Restoration Project – Permit Modification to Support the Use of an Offshore Sand Source, Flagler County, FL
(TO 2019-23)

Scope Prepared by:
Foth Infrastructure & Environment, LLC (Foth)
501 Riverside Avenue, Suite 801
Jacksonville, FL 32202
(904) 387-6114

Table B-1: Hammock Dunes Dune Restoration Project – Permit Modification to Support the Use of an Offshore Sand Source.

Hammock Dunes Dune Restoration Project – Permit Modification to Support the Use of an Offshore Sand Source					
Coastal Engineering Consulting Services					
Task	**Description**	**Foth**	**Outside Services / Subcontractors**	**Allowance**	**TOTAL (excl. Allowance)**
Lump Sum					
Task 1	Project Modification Engineering and Formulation (Temporary Stockpile)	$ 46,112.00	$ -	$ -	$ 46,112.00
Task 2	Permit Modifiction Preparation & Agency Coordination	$ 31,488.00	$ -	$ -	$ 31,488.00
Task 3	Environmental Assessment and NEPA Document Preparation	$ 9,968.00	$ 37,512.00	$ -	$ 47,480.00
Task 4	Responses to Permitting Requests for Additional Information	$ 23,904.00	$ -	$ -	$ 23,904.00
	TOTAL	**$ 111,472.00**	**$ 37,512.00**	**$ -**	**$ 148,984.00**
Allowance					
Task 5	Allowance for Biological Assessment (BA), County Reach 2 Permit Modifications for Stockpile, and Additional RAI Responses (Authorization Withheld)	$ -	$ -	**$ 75,000.00**	$ -

Details on following page…

Table B-2: Hammock Dunes Dune Restoration Project – Permit Modification to Support the Use of an Offshore Sand Source.

Task 1: Project Modification Engineering and Formulation (Temporary Stockpile) (Lump Sum)

DIRECT LABOR												EXPENSES		OUTSIDE SERVICES		TOTAL
LABOR CATEGORY	Admin / Mgmt	Engineering Analysis	Permit-Level Design	Design Memo	Scoping Meetings	Liaison QA/QC			TOTAL HOURS	RATE	COST	Item	TOTAL	Service	Cost	
Senior Client Team Leader	8	4	4	4	4	4			28	$ 278.00	$ 7,784.00					
Project Manager	8					4			12	$ 214.00	$ 2,568.00					
Coastal Engineer 4	8	8	16	16	8	8			64	$ 203.00	$ 12,992.00					
Coastal Engineer 3									0	$ 185.00	$ -					
Coastal Engineer 1		40	40	40	8				128	$ 171.00	$ 21,888.00					
CAD Technician 4									0	$ 167.00	$ -					
Acct. Analyst	8								8	$ 110.00	$ 880.00					
									Subtotal - Direct Labor		$ 46,112.00	*Subtotal - Expenses*	$ -	*Subtotal - Outside Services*	$ -	

Task 2: Permit Modification Preparation & Agency Coordination (Lump Sum)

DIRECT LABOR												EXPENSES		OUTSIDE SERVICES		TOTAL
LABOR CATEGORY	Admin / Mgmt	Permit Drawings and Applications	Agency Coordination	Liaison QA/QC					TOTAL HOURS	RATE	COST	Item	TOTAL	Service	Cost	
Senior Client Team Leader	4	4	4	4					16	$ 278.00	$ 4,448.00					
Project Manager	4								4	$ 214.00	$ 856.00					
Coastal Engineer 4		16	16	8					40	$ 203.00	$ 8,120.00					
Coastal Engineer 3									0	$ 185.00	$ -					
Coastal Engineer 1		40	24						64	$ 171.00	$ 10,944.00					
CAD Technician 4		40							40	$ 167.00	$ 6,680.00					
Acct. Analyst	4								4	$ 110.00	$ 440.00					
									Subtotal - Direct Labor		$ 31,488.00	*Subtotal - Expenses*	$ -	*Subtotal - Outside Services*	$ -	

Task 3: Environmental Assessment and NEPA Document Preparation (Lump Sum)

DIRECT LABOR												EXPENSES		OUTSIDE SERVICES		TOTAL
LABOR CATEGORY	Admin / Mgmt	Technical Support to Env. Subconsultant	Liaison QA/QC						TOTAL HOURS	RATE	COST	Item	TOTAL	Service	Cost	
Senior Client Team Leader	4	4	4						12	$ 278.00	$ 3,336.00			Coastal Eco Group	$37,512	
Project Manager	2								2	$ 214.00	$ 428.00					
Coastal Engineer 4		8	8						16	$ 203.00	$ 3,248.00					
Coastal Engineer 3									0	$ 185.00	$ -					
Coastal Engineer 1		8	8						16	$ 171.00	$ 2,736.00					
CAD Technician 4									0	$ 167.00	$ -					
Acct. Analyst	2								2	$ 110.00	$ 220.00					
									Subtotal - Direct Labor		$ 9,968.00	*Subtotal - Expenses*	$ -	*Subtotal - Outside Services*	$37,512.00	

Task 4: Responses to Permitting Requests for Additional Information (Lump Sum)

DIRECT LABOR												EXPENSES		OUTSIDE SERVICES		TOTAL
LABOR CATEGORY	Admin / Mgmt	Responses to RAI #1	Responses to RAI #2	Liaison QA/QC					TOTAL HOURS	RATE	COST	Item	TOTAL	Service	Cost	
Senior Client Team Leader	4	4	4	8					20	$ 278.00	$ 5,560.00			Coastal Eco Group		
Project Manager	2								2	$ 214.00	$ 428.00					
Coastal Engineer 4		24	8	8					40	$ 203.00	$ 8,120.00					
Coastal Engineer 3									0	$ 185.00	$ -					
Coastal Engineer 1		40	16						56	$ 171.00	$ 9,576.00					
CAD Technician 4									0	$ 167.00	$ -					
Acct. Analyst	2								2	$ 110.00	$ 220.00					
									Subtotal - Direct Labor		$ 23,904.00	*Subtotal - Expenses*	$ -	*Subtotal - Outside Services*	$ -	

Flagler County Board of County Commissioners
General Business / Agenda Item 8.a.

Meeting Date:	October 5, 2026
Department Contact:	Joseph Hegedus, Health and Human Services Director, Jessica Martin, Procurement Coordinator, Brian Eichinger, OMB Manager
Subject:	**Consideration of Approval of Awarding Request for Proposals (RFP) Response from Therapeutic Assisted Living and Carry Out Operational Transition of the David I. Siegel Adult Day Care Center.**

Overview/Summary:
This item was continued from the Board's September 14, 2026 regular meeting to provide an opportunity for Commissioners to perform a site visit of Therapeutic Assisted Living's current operation.

During the July 13, 2026 meeting, the Board provided staff with consensus to issue a Request for Proposals (RFP) for the operation of the David I. Siegel Adult Day Care Center (ADC) program. This was new direction in follow up to the January 12, 2026 workshop, wherein the Board provided staff with consensus to dissolve the Adult Day Care program by the end of this fiscal year on September 30, 2026. Reasons cited by the Board for the dissolution of the program were limited enrollment relative to the ongoing costs of the program, with staff noting that despite the program costs and the equivalent of the County's subsidy of the program, the program remains significantly less expensive to the enrollee than in-home care.

Subsequently, the Commission received two public-private partnerships requests (pursuant to Sec. 255.065, Florida Statutes) to continue Adult Day Care operations. The board directed staff to issue the RFP in light of this interest. Procurement staff issued 26-RFP-022: Operation and Program Administration of the Flagler County Adult Day Care at the David I. Siegel Center on August 3, 2026, with a proposal closing date of August 24, 2026. Three interested applicants completed the mandatory bidder conference meeting and submitted eligible proposals. Applications were received from Calvin's Care LLC; Mishpakha Inc.; and Therapeutic Assisted Living Corp.

The evaluation committee met on September 2, 2026 to rank the scored applications, with Therapeutic Assisted Living Corp. as the highest scoring bidder to move forward for Board consideration to operate the ADC. Staff will note that while the vendor ranked highest, there are nuanced differences in the program model, levels of service and related aspects from the bidder, as well as need to ramp up staffing, transition program licensure and other aspects that will take time to complete and ultimately may result in a slightly different program model than when operated by the County. This includes limited RN/LPN staffing, which is allowable under basic ADC state licensure, but may impact medical aspects of the program, such as regular medication management and levels of available medical response in an emergency.

Should the Board approve the highest scoring applicant, staff will work closely and quickly with the vendor to complete a Change of Ownership (CHOW) with the State of Florida Agency for Health Care Administration (AHCA). The CHOW process can take 60-90 days and successful completion is required for transfer of operations. If the selected applicant CHOW is not approved by AHCA, the program licensure and operations cannot be transferred. County staff will also work with the vendor to transfer Medicaid Managed Long Term Care (MLTC) contracts and patients, as well as private pay patient care over to the new vendor. Additionally, the County will complete related agreements with the vendor to memorialize logistical aspects such as facility use and other components.

To enact this measure staff will need to extend the Adult Day Care program between 60-90 days to allow the full transition of licensure ownership and also continuity of care. Three months of gap funding, spanning October 1 to December 31, 2026 have been included in the FY 2026-27 budget to account for this transition time.

One final item of note: ITT has recently released its original deed conditions and restrictions over the subject parcel. This release would allow the County to pursue additional uses of this parcel other than for provision of senior services, or alternatively would allow for the parcel to be disposed of as surplus to the highest and best bidder for redevelopment.

Strategic Plan:
Focus Area: Effective Government (EG)
Goal 2 – Build & Maintain Relationships to Support Effective & Efficient Government
Objective EG 2.2: Pursue policy, fiscal and legislative options to provide county leaders with the flexibility and tools needed to respond to the challenges associated with a growing community.

Funding Information:
No County funding is proposed or committed to be available under this bid, nor in any subsequent contracts. The winning bidder assumes responsibility for administrative and operational costs of ADC operations. The County will continue to provide the facility space at no cost initially, then at low-cost beyond year 1. The County will continue to maintain the facility.

Recommendations:
Staff recommends that the Board review the response from the highest-ranking bidder and take one of two possible actions:
1. The highest-ranking bidder of the ADC RFP - Therapeutic Assisted Living - is presented for board consideration to take over program, administration and operational oversight of the David I Siegel Adult Day Care Center, to include completing a CHOW and subsequent transfers of related licensing, MLTC contracts and remaining participating patients. Board approval shall authorize the County Administrator to execute the pertinent 26-RFP-02 vendor agreement. Approval shall also authorize the

County Administrator to execute CHOW and all necessary documents associated with accepting and implementing said contract, including any amendments, approved as to form by the County Attorney.
2. Reject all bids and move forward with closing the Adult Day Care Center, providing required notice to funding and licensing agencies and extending operations until required minimum closure notice timeframes have been met.

Attachments:

1. CN - 26-RFP-022 - Adult Day Care - Bid Document
2. CN - 26-RFP-022 - Adult Day Care - Consensus Scorecard
3. CN - 26-RFP-022 - Adult Day Care - Notice of Intent to Award
4. CN - 26-RFP-022 - Adult Day Care - Therapeutic Assisted Living Corp Submission
5. REF - 26-RFP-022 - Adult Day Care - Therapeutic Assisted Living Corp Financial Report
6. 26-RFP-022 - Contract - Adult Daycare

County of Flagler

REQUEST FOR PROPOSAL

26-RFP-022

OPERATION AND PROGRAM ADMINISTRATION OF THE FLAGLER COUNTY ADULT DAY CARE AT THE DAVID I. SIEGEL CENTER

RELEASE DATE: August 3, 2026
RESPONSE DEADLINE: August 24, 2026, 2:00 pm
Please refer to the project timeline in this document for all important deadlines.

Table Of Contents

1. Introduction
2. General Terms and Conditions
3. Special Terms and Conditions
4. Insurance Requirements
5. Scope of Work
6. Proposal Submittal Requirements
7. Evaluation Phases
8. Vendor Questionnaire
9. Definitions
10. Attachments/Exhibits

Attachments:

A - PO Standard Terms and Conditions

1. Introduction

1.1. Summary

Flagler County is seeking competitive proposals from qualified, experienced, and licensed providers to assume full operational, programmatic, and financial responsibility for the County-owned Adult Day Care Center facility located in Flagler County, Florida. The David I. Siegel Center is located at 1000 Belle Terre Blvd., Palm Coast FL, operating as a state-licensed Adult Day Care facility for 20 years.

1.2. Contact Information

Jessica Martin
Senior Procurement Analyst
1769 E. Moody Blvd
Building 2
Bunnell, FL 32110
Email: jmartin@flaglercounty.gov
Phone: (386) 313-4063

Department:
Health & Human Services

Department Head:
Joe Hegedus
Director

1.3. Timeline

Release Project Date	August 3, 2026
Pre-Proposal Meeting (Mandatory)	August 12, 2026, 10:00am David I. Siegel Adult Day Care Center 1000 Belle Terre Blvd Palm Coast, FL 32164
Question Submission Deadline	August 14, 2026, 12:00pm

Proposal Submission Deadline and Bid Opening	August 24, 2026, 2:00pm 3rd Floor Financial Services Conference Room 1769 East Moody Blvd Bldg. 2 Bunnell, FL 32110 Microsoft Teams meeting Join on your computer, mobile app or room device https://www.microsoft.com/en-us/microsoft-teams/join-a-meeting Meeting ID: 295 599 647 592 082 Passcode: rC2yD2uD
Evaluation Committee Meeting (Non-Mandatory)	September 2, 2026, 2:00pm 3rd Floor Financial Services Conference Room 1769 East Moody Blvd Bldg. 2 Bunnell, FL 32110 Microsoft Teams meeting Join on your computer, mobile app or room device https://www.microsoft.com/en-us/microsoft-teams/join-a-meeting Meeting ID: 253 471 036 474 966 Passcode: rV2MY6uR

2. General Terms and Conditions

2.1. Submission of Offers

The Flagler County Board of County Commissioners ("Flagler County" or "County") are requesting proposals for the service and/or product(s) detailed within this solicitation. If your company is interested in submitting a proposal to provide this service and/or product(s), please provide the requested information in this solicitation, complete the included forms, and submit these documents with your response through OpenGov Procurement, at https://procurement.opengov.com/portal/flaglercounty by the date and time posted. The submission of responses prior to the specified date and time is solely and strictly the responsibility of the Proposer. Responses received after the posted date and time will not be considered. Additional information may be submitted with the response. No offer may be modified after acceptance. Terms and conditions differing from those in this solicitation may be cause for disqualification of the Response. Failure to provide the required information may result in the Response not being considered.

Do not submit confidential information, proprietary information and/or trade secrets.

2.2. Purchase Order/Master Agreement Terms and Conditions

The County's general terms and conditions for Purchase Orders or Master Contracts included as an exhibit with this Request for Proposal (RFP) shall apply unless otherwise noted.

2.3. Compliance with Ordinances, Regulations, and Laws

The County reserves the right to require proof that the Proposer is an established business and is abiding by all applicable local, State, and Federal ordinances, regulations, and laws. This may include, but is not limited to, business tax receipts, business licenses, Florida sales tax registration, Federal Employers Identification Number, and/or registration with the Florida Department of State, Division of Corporations' Sunbiz website at www.sunbiz.org.

2.4. Agreement Cancellation

1. The County reserves the right to cancel any Agreement resulting from this Request for Proposal (RFP) without cause with a minimum thirty (30) day written notice to the Contractor.
2. The Contractor may cancel the Agreement resulting from this Request for Proposal (RFP) without cause with a minimum thirty (30) days written notice to the County.

2.5. Proposer's Responsibility

The Proposer, by submitting a Response, represents that:

1. The Proposer has read and understands the Solicitation in its entirety and that the Response is made in accordance therewith;

2. The Proposer possesses the capabilities, resources, and personnel necessary to provide efficient and successful service to the County;
3. The Proposer has made all investigations and examinations necessary to ascertain site and/or local conditions and requirements affecting the full performance of the contract and to verify any representations made by Flagler County, Florida, upon which the Proposer will rely. If the Proposer receives an award because of its Response, failure to have made such investigations and examinations will in no way relieve the Proposer from its obligations to comply in every detail with all provisions and requirements of the contract, nor will a plea of ignorance of such conditions and requirements be accepted as a basis for any claim by the Proposer for additional compensation or relief; and,
4. The Proposer will be held responsible for any and all discrepancies, errors, etc., in discounts or rebates which are discovered during the Agreement term or up to and including three (3) fiscal years following the County's annual audit.

2.6. Execution of Offer

Offer shall contain a signature in the space(s) provided of a representative authorized to legally bind the Proposer to the provisions therein. All spaces requesting information from the Proposer or asking a question of the Proposer shall be completed.

2.7. Opening

Pursuant to Section 119.071, Florida Statutes, responses and the completed tabulation will be available for inspection within thirty (30) days of Solicitation opening. Contact the Office of Procurement and Contracts during regular business hours to inspect responses and the completed tabulation or go to the County's ePROCUREMENT PORTAL for inspection of the completed tabulation. The foregoing notwithstanding, if, prior to the County making responses available for inspection, the County rejects all responses and concurrently provides notice of the County's intent to reissue the solicitation, then the County may avail itself of the exemption for rejected responses set forth in Section 119.071, Florida Statutes, to the extent such Section may apply.

Solicitation openings and public meetings may be attended either in person or remotely. Solicitation openings may be accessed remotely as described in the introduction timeline section of this Solicitation.

In accordance with the American Disabilities Act and Section 286.26, Florida Statutes, persons with disabilities needing a special accommodation to participate in the proceedings, or an interpreter to participate in any proceedings, should contact the Office of Procurement and Contracts at (386) 313-4008 two (2) business days before any meeting date.

2.8. Public Records Law

Pursuant to section 119.0701(2)(a), Florida Statutes, the County is required to provide Contractor with this statement and establish the following requirements as contractual obligations pursuant to the Contract:

IF THE CONTRACTOR HAS QUESTIONS REGARDING THE APPLICATION OF CHAPTER 119, FLORIDA STATUTES, TO THE CONTRACTOR'S DUTY TO PROVIDE PUBLIC RECORDS RELATING TO THIS CONTRACT, CONTACT THE CUSTODIAN OF PUBLIC RECORDS AT 386-313-4001, PUBLICRECORDS@FLAGLERCOUNTY.GOV, BY MAIL, FLAGLER COUNTY BOARD OF COUNTY COMMISSIONERS, OFFICE OF PROCUREMENT AND CONTRACTS , ATTN: ADMINISTRATION, 1769 E. MOODY BLVD, BLDG. 2, BUNNELL, FL 32110.

By entering into this Contract, Contractor acknowledges and agrees that any records maintained, generated, received, or kept in connection with, or related to the performance of services provided under, this Contract are public records subject to the public records disclosure requirements of section 119.07(1), Florida Statutes, and Article I, section 24 of the Florida Constitution. Pursuant to section 119.0701, Florida Statutes, any Contractor entering into a contract for services with the County is required to:

1. Keep and maintain public records required by the County to perform the services and work provided pursuant to this Contract.
2. Upon request from the County's custodian of public records, provide the County with a copy of the requested records or allow the records to be inspected or copied within a reasonable time at a cost that does not exceed the cost provided in Chapter 119, Florida Statutes, or as otherwise provided by law.
3. Ensure that public records that are exempt or confidential and exempt from public records disclosure requirements are not disclosed except as authorized by law for the duration of the Contract term and following completion or termination of the Contract if the Contractor does not transfer the records to the County.
4. Upon completion or termination of the Contract, transfer, at no cost, to the County all public records in the possession of the Contractor or keep and maintain public records required by the County to perform the service. If the Contractor transfers all public records to the County upon completion or termination of the Contract, the Contractor shall destroy any duplicate public records that are exempt or confidential and exempt from public records disclosure requirements. If the Contractor keeps and maintains public records upon completion or termination of the Contract, the Contractor shall meet all applicable requirements for retaining public records. All records stored electronically must be provided to the County, upon request from the County's custodian of public records , in a format that is compatible with the information technology systems of the County.

Requests to inspect or copy public records relating to the County's Contract for services must be made directly to the County. If Contractor receives any such request, Contractor shall instruct the requestor to contact the County. If the County does not possess the records requested, the County shall immediately notify the

Contractor of such request, and the Contractor must provide the records to the County or otherwise allow the records to be inspected or copied within a reasonable time.

Contractor acknowledges that failure to provide the public records to the County within a reasonable time may be subject to penalties under section 119.10, Florida Statutes. Contractor further agrees not to release any records that are statutorily confidential or otherwise exempt from disclosure without first receiving prior written authorization from the County. Contractor shall indemnify, defend, and hold the County harmless for and against any and all claims, damage awards, and causes of action arising from the Contractor's failure to comply with the public records disclosure requirements of section 119.07(1), Florida Statutes, or by Contractor's failure to maintain public records that are exempt or confidential and exempt from the public records disclosure requirements, including, but not limited to, any third party claims or awards for attorney's fees and costs arising therefrom. Contractor authorizes County to seek declaratory, injunctive, or other appropriate relief against Contractor from a Circuit Court in Flagler County on an expedited basis to enforce the requirements of this section.

2.9. Confidential Information and Infringement

A. Confidential Information and/or Trade Secret do not include the following:

   1. Information already known or independently developed the party in possession; or
   2. Information in the public domain through no wrongful act of the party in possession; or
   3. Information received by the party in possession from a third party who was free to disclose it; or
   4. Information regularly disclosed to third parties without restriction on disclosure; or
   5. Information required to be disclosed by law or an order of a court of competent jurisdiction.

B. Confidential Information and Infringement. If Contractor is licensing or developing software (including derivative works) for use by the County, Contractor grants County a perpetual, fully paid, non-assignable, non-exclusive, royalty-free license to use Contractor's software deliverables developed or licensed under a Contract. Said license includes software owned by Contractor, which is furnished under a Contract, for County's internal use with such use to include the right to modify such deliverable(s) and to create derivative works for such internal use including, without limitation, the right to use such deliverable(s).

C. If Contractor is licensing, providing, or developing software including derivative works for use by the County, Contractor agrees to protect and indemnify and hold harmless the County, its agents, elected officials and employees of the County from and against any and all claims, demands, actions, and causes of action which may arise asserting that all or any part of the Contractor licensed applications provided under any software owned by Contractor and licensed to County or provided by Contractor for use thereof by the County, infringes or misappropriates any third party's United States patent, copyright or any trade secret protected under United States law.

1. In addition to the foregoing indemnification provision, Contractor shall also take the following steps to assure that County can continually use the software which Contractor has directly licensed to County or provided for use thereof by the County in substantially the same manner delivered or subsequently enhanced or modified by:

    a. Promptly replacing the allegedly infringing or misappropriated item or items with compatible, functionally equivalent items which are not alleged to be infringing or misappropriated; or

    b. Promptly modifying the alleged infringing or misappropriated item or items to eliminate the alleged infringement or misappropriation without impairing County's intended use of the Licensed Applications and/or Sublicensed Applications in any manner; or

    c. Promptly procuring the right for the County to continue to use the Licensed Applications and/or Sublicensed Applications without modification; and

    d. Unless otherwise agreed by the parties, promptly shall mean for the purposes of this Section that the events described herein shall occur in no less than sixty (60) days from the date that notice of the claim is received by Contractor unless otherwise agreed by the Parties.

D. In the event that Contractor does not enable the County to use that which Contractor has delivered through accomplishing one or more of the alternatives set forth in above within aforementioned time period set forth herein during the term of the contract, Contractor shall be in material default of said contract and subject to Termination.

E. If Contractor is granting a license or develops software for the County under this contract, it hereby warrants and represents that:

1. Contractor is the sole owner of all right, title, and interest in and to the Contractor licensed software, user manuals and documentation, including all patents, copyrights, copyright rights, trade secrets, trademarks, trade names and all proprietary and intellectual rights and confidential information contained therein, and that it is authorized to enter into a Contract and grant County a perpetual license; and

2. No portion of any licenses or right granted to the County to use Contractor's software pursuant to the terms of the applicable software license contract of Contractor for any work performed under a Contract violates or is protected by right, title, interest or similar right of any third person or entity.

2.10. Clarification, Correction of Entry, Minor Irregularities

The Flagler County Board of County Commissioners reserves the right to allow for the clarification of questionable entries and the correction of obvious mistakes. The County reserves the right to waive minor irregularities in Submittals, providing such action is in the best interest of the County. Minor irregularities are

defined as those that have no adverse effect on the County's best interests and will not affect the outcome of the selection process by giving the Proposer an advantage or benefit not enjoyed by other Proposers.

2.11. Revisions, Addenda, Questions & Answers

1. It is incumbent upon each Proposer to carefully examine the specifications, scope of work/service, terms, and conditions of this Solicitation. The posting of answers through the County's ePROCUREMENT PORTAL is the only official method by which interpretation, clarification, or additional information can be given. Questions and exceptions concerning any Section of this Solicitation shall be directed through the question-and-answer section of the County's ePROCUREMENT PORTAL.
2. If it becomes necessary for the County to revise or clarify any part of this Solicitation it will be updated on the County's ePROCUREMENT PORTAL by the posting of answers to questions received and/or the revision of solicitation language/documentation. It is each Proposer's responsibility to check the County's ePROCUREMENT PORTAL for any posted answers, and/or solicitation changes. Each Proposer shall ensure that they have reviewed all questions & answers and/or changes to this Solicitation before submitting their Response. By submitting a response, Proposers acknowledge that they have reviewed all posted answers, and/or solicitation changes prior to the posted closing date and time.
3. Each answer issued by the County shall become a material part of this Solicitation. Answers posted by the County and/or changes made to the Solicitation are authoritative and shall be considered an addendum to the Solicitation.
4. All information in this Solicitation, including information provided through the Question & Answer feature, are incorporated into the Solicitation and/or any Contract resulting from this Solicitation.
5. Questions and exceptions shall be submitted before12:00 pm on Friday, August 14, 2026 . Thereafter, no further questions or exceptions will be accepted or reviewed by the County and Proposer's right to submit questions or exceptions will terminate and any questions or exceptions not previously made shall be deemed waived. Oral representations will not be binding on the County.

2.12. Incurred Expenses

The County has no obligation to make an award as a result of this Solicitation, nor shall the County be responsible for any cost or expense which may be incurred by any Proposer in preparing and submitting a Response, or any cost or expense incurred by any Proposer prior to the execution of a Purchase Order or Contract.

2.13. Disadvantaged Businesses

The Flagler County Board of County Commissioners has adopted policies which assure and encourage the full participation of Minority Business Enterprises (MBE), Women-owned Business Enterprises (WBE), and Veteran-owned Business Enterprises (VBE) in the provision of goods and services. The County encourages joint ventures with these businesses.

2.14. Local Preference

It is the policy of the Board that Flagler County vendors are given preference in the procurement process, unless otherwise prohibited or waived by the County Administrator.

The term Flagler County Vendor means any business: having a physical location within the boundaries of Flagler County for at least twelve (12) months immediately prior to the issuance of the request for Quotes, Bids or Proposals by the County; holding any business licenses required by the County, and/or, the municipalities, if applicable; and employing at least one (1) full time employee, or two (2) part-time employees whose primary residence is in Flagler County, or, if the business has no employees, the business shall be at least fifty (50) percent owned by one (1) or more persons whose primary residence is in Flagler County.

It is the vendor's responsibility to request Local Preference by submitting a completed Local Preference Affidavit with its sealed proposal.

2.15. Pricing

Unless otherwise specified, prices offered shall:

- remain firm for a period of at least one hundred and twenty (120) days from the date of Solicitation opening, prior to award being made;
- include all expenses necessary to provide the service at the location specified (for services).

2.16. FOB Destination

The FOB point for this contract and for all purchases made under it shall be at the project site in Flagler County, Florida. Delivery will not be complete until the using department has accepted each item. Delivery to a common carrier shall not constitute delivery to the ordering agency. All disputes arising out of shipping prior to acceptance by Flagler County shall be between the Contractor and the carrier.

2.17. Payment Terms

Unless otherwise stated in the Special Terms and Conditions, the County will remit full payment on all undisputed invoices within forty five (45) days from receipt by the appropriate person(s) (to be designated at time of contract) or receipt of all products or services ordered in accordance with the Local Government Prompt Payment Act, Part Vii, Chapter 218, Florida Statutes.

2.18. Unusual Costs

The Contractor may petition the County at any time for an additional rate adjustment on the basis of extraordinary and unusual changes in the costs of operation that could not reasonably be foreseen by a prudent operator and which, by all reasonable expectations, will continue for at least one (1) year. If the Contractor petitions for such an increase, the Contractor shall also petition for a rate reduction on the basis of extraordinary and unusual changes in the costs of operation that could not reasonably be foreseen by a prudent operator and which, by all reasonable expectations, will continue for at least one (1) year; failure to make such petition may be grounds for contract termination.

The Contractor's request shall contain substantial proof and justification to support the need for the rate adjustment. The County may request from the Contractor, and the Contractor shall provide further information as may be reasonably necessary in making its determination. The County shall approve or deny the request, in its sole discretion, in whole or in part, within sixty (60) days of receipt of the request and all other additional information required by the County. Any price redetermination shall be solely based upon the documentation provided and the County reserves the right to rescind any price relief granted should the circumstances change, and prices go down.

2.19. Additional Terms & Conditions

The Flagler County Board of County Commissioners reserves the right to reject offers containing terms or conditions contradictory to those requested in this Solicitation.

2.20. Taxes

County is exempt from Manufacturers' Federal Excise Tax (Exemption# 59-78-0089K) and Florida sales tax (Exemption# 85-8013245979C-5). Certificates are available and can be obtained by emailing purchasing@flaglercounty.gov.

2.21. Discounts

All discounts except those for prompt payment shall be considered in determining the lowest net cost for evaluation purposes. All discounts shall remain firm for the term of the contract.

2.22. Meets/Minimum Specifications

The specifications listed in the Scope of Work are the minimum required performance specifications for this Solicitation; they are not intended to limit competition nor specify any particular Proposer, but to ensure that the County receives quality services. The Proposer represents that all offers to this Solicitation shall meet or exceed the minimum requirements specified.

2.23. Samples

When required, samples of products shall be furnished with Response to the County at no charge. Samples may be tested and will not be returned to the Proposer. The result of any and all testing shall be made available upon written request.

2.24. Silence of Specifications

The apparent silence of these specifications or any supplemental specifications as to details or the omission from same of any detailed description concerning any point, shall be regarded as meaning that only the best commercial practices are to prevail and that only materials of first quality and correct type, size, and design are to be used. All workmanship shall be first quality. All interpretations of specifications shall be made upon the basis of this statement.

2.25. Change in Scope of Work/Service

1. The County may order changes in the work/service consisting of additions, deletions, or other revisions within the general scope of the contract. No claims may be made by the Contractor that the scope of the project or of the Contractor's services has been changed, requiring changes to the amount of compensation to the Contractor or other adjustments to the contract, unless such changes or adjustments have been made by written amendment or change order to the contract signed by the County and the Contractor.
2. If the Contractor believes that any particular work/service is not within the scope of work/service of the contract, is a material change, or will otherwise require more compensation to the Contractor, the Contractor must immediately notify the County's designated representative in writing of this belief. The Contractor and County shall negotiate modifications to the contract in good faith and agree upon equitable adjustment for any changes in services or other obligations required of the Contractor due to such modifications. The Contractor must assert its right to an adjustment under this clause within thirty (30) days from the date of receipt of the written order.
3. The County reserves the right to negotiate with the awarded Contractor(s) without completing the competitive bidding process for materials, products, and/or services similar in nature to those specified within this solicitation for which requirements were not known when the Solicitation was released.

2.26. Governing Laws/Venue

This Agreement shall be interpreted and construed in accordance with and governed by the laws of the State of Florida without giving effect to any choice of law principles. Jurisdiction over, and venue for, any controversies or legal issues arising out of this contract shall, if in state court, be exclusively in the 7th Judicial Circuit in and for Flagler County, Florida. By entering into this contract, Contractor and County hereby expressly waive any rights either party may have to a trial by jury of any civil litigation related to the contract, and, unless otherwise expressly provided herein, each agrees to bear its own costs and attorney's fees relating to any dispute arising under the contract.

2.27. Assignment

Contractor may not assign or otherwise convey Contractor's rights and/or obligations under the contract without obtaining County's prior written consent, which consent County may withhold, limit and/or condition in County's sole discretion, including, but not limited to, requiring the Contractor or his/her proposed successor in interest to post a performance bond. Any consent by the County under this Section shall be by written amendment to the contract in a form and substance specified by the County in its sole discretion. If Contractor desires to assign or otherwise convey its rights and/or obligations under the contract, Contractor shall, no less than thirty (30) days prior to the assignment's proposed effective date, provide County with a written request for County's consent. Failure to provide such notice may result in the County assessing a processing fee of Five Hundred Dollars (US $500.00); however, payment of such fee shall not entitle the Contractor to the County's acceptance or approval of its request for assignment.

Nothing herein shall preclude the right of the County to waive its rights under this Section, but no waiver shall be granted by the County without a written and duly executed amendment to the contract.

2.28. Content of Solicitation/Response

The contents of this Solicitation, all terms, conditions, specifications, and requirements included herein and the accepted and awarded response thereto shall be incorporated into a contract to purchase and become legally binding. Any terms, conditions, specifications, and/or requirements specific to the item or service requested in this Solicitation shall supersede the requirements as specified in the *General Terms and Conditions* and/or *Special Terms and Conditions* section(s) of this Solicitation.

2.29. Contract

The contents of this Solicitation and all provisions of the successful proposal deemed pertinent by the County shall be incorporated into a contract and become legally binding on the selected Proposer and County. The content of the contract may contain changes as a result of the Solicitation process and the content of the submittal received. The contract shall, at minimum, include the substantive terms and conditions as outlined in the Solicitation and be subject to review by the County Attorney or designee prior to approval and execution for determination of legal form and substantive sufficiency, and shall contain an order of precedence and may contain those additional terms and conditions that the County deems in its best interest.

The County shall be responsible for only those orders placed by the County pursuant to the contract or on an authorized signed Purchase Order. The County shall not be responsible for any order, change substitution or any other discrepancy from the Purchase Order or Master Agreement. If there is any question about the authenticity of a Purchase Order, contract, or change order, the Proposer should promptly contact the Office of Procurement and Contracts at (386) 313- 4008.

2.30. Disclosure of Response Content

All material submitted becomes the property of the County and may be returned only at the County's option. The County has the right to use any or all ideas presented in any reply to this Solicitation. Selection or rejection of any Response does not affect this right. Flagler County, Florida, is governed by the Public Record Law, Chapter 119, Florida Statutes (F.S.).

2.31. Limitation of Liability/Indemnification

The Contractor shall indemnify, defend, and hold harmless the County including its districts, authorities, separate units of government established by law, ordinance or resolution, partners, elected and non-elected officials, employees, agents, volunteers, and the State of Florida, including its officers and employees, from and against all liabilities, damages, losses and costs, including, but not limited to, reasonable attorney's fees, to the extent caused by the negligence, recklessness, or intentional wrongful misconduct of the Contractor or its subcontractors, agents, employees, or any persons employed or utilized by the Contractor in the performance of the Contractor's obligations or services under this contract. Such obligations or services shall not be construed to negate, abridge, or reduce other rights or obligations of indemnity which would otherwise exhaust as to a party or person describe in this contract.

In all claims against the County, Contractor's indemnification obligation shall not be limited in any way by any limitation on the amount or type of damages, compensation or any benefits payable by or for Contractor, or its employees, agents, contractors, or subcontractors pursuant to Contractor's insurance. The Contractor's indemnification obligation shall survive the expiration or termination of the contract.

2.32. Payment of Subcontractors

Contractor shall save and hold the County harmless from any and all claims or actions by Contractor's subcontractor(s) for payment of monies such subcontractor claims to be owed by Contractor for Work performed under the contract. Nothing in the contract shall create any obligation on the part of the County to pay directly to any Subcontractors any monies due for Work performed under the contract.

2.33. Infringement Claim

For all licensed software or derivate works of the licensed software used by County under the resulting contract, Contractor agrees to protect, defend, indemnify, and hold harmless the County, its agents, elected officials and employees from and against any and all claims, demands, actions, and causes or action which may arise asserting that all or any part of Contractor's licensed software or applications that are owned and licensed by Contractor to County for use thereof by County, infringes or misappropriates any third party's valid state patent, copyright, trademark, or any trade secret protected under United States law. In the event of an infringement claim, Contractor shall have the option: (i) to procure for County the right to continue using any product or service found to be infringing; (ii) to replace any such infringing product or service with a non-infringing product or service; or (iii) to modify such infringing product or service to make it non-infringing. Contractor shall have no obligation under this Section if the Infringement Claim is based upon the use of the system in combination with other hardware or software applications not furnished by Contractor, or if such a claim arises from County's modification of the system without the authorization of Contractor.

2.34. Sovereign Immunity

County expressly retains all rights, benefits and immunities of sovereign immunity in accordance with Section 768.28, Florida Statutes (as amended). Notwithstanding anything set forth in any section of this contract to the contrary, nothing in this contract shall be deemed as a waiver of immunity or limits of liability of the County beyond any statutory limited waiver of immunity or limits of liability which may have been or may be adopted by the Florida Legislature and the cap on the amount and liability of the County for damages, regardless of the number or nature of claims in tort, equity, or contract, shall not exceed the dollar amount set by the legislature for tort. Nothing in this contract shall inure to the benefit of any third party for the purpose of allowing any claim against the County, which claim would otherwise be barred under the doctrine of sovereign immunity or by operation of law.

2.35. Compliance with Federal E-Verify Regulations

Contractor covenants and agrees to the following provisions, as required by law:

1. If and to the extent the contract meets the criteria set forth at 48 C.F.R. § 52.222-54(e), the criteria of 48 C.F.R. § 52.222-54 are hereby incorporated by reference into this contract as if fully set forth herein.

2. Contractor and any of Contractor's Subcontractors shall register with and utilize the U.S. Department of Homeland Security's E-Verify system to verify the employment eligibility and work authorization status of all new employees hired by Contractor (or Contractor's Subcontractors) on or after the effective date of this contract and thereafter during the remaining term of the contract.

3. In the event Contractor enters into a subcontract, Contractor shall require, via written contract, the Subcontractor agree to: (i) register with and utilize the U.S. Department of Homeland Security's E-Verify system to verify the employment eligibility of all new employees hired on or after the effective date of the subcontract and thereafter during the remaining term of the subcontract; and (ii) provide Contractor with an affidavit stating that the Subcontractor does not employ, contract with, or subcontract with an unauthorized alien. Contractor shall maintain a copy of such affidavit for the duration of this contract or the subcontract, whichever is longer. Contractor shall provide a copy of such affidavit to the County before the Subcontractor begins any work associated with the contract. If the County has a good faith belief that a subcontractor knowingly violated the requirements set forth in this Section or Sections 448.09(1) or 448.095 of the Florida Statutes, but also has a good faith belief Contractor otherwise complied with this Section and applicable law, the County shall promptly notify Contractor and order Contractor to immediately terminate its contract with the Subcontractor. Failure to comply with said order shall constitute a material breach of this contract.

4. If the County has a good faith belief Contractor has knowingly violated, or if Contractor is found to have violated, this Section; Section 448.09(1), Florida Statutes; Section 448.095, Florida Statutes; or

the Presidential Executive Order and subsequent Federal Acquisition Regulation (FAR) rule requiring federal contractors to use E-Verify, if applicable, then the following shall be true: (i) such violation shall be a material breach of this contract by Contractor; (ii) Contractor shall indemnify, defend, and hold harmless the County from any resulting costs or expenses, including fines or penalties levied by a government agency and the County's loss or repayment of grant funds by breaching the requirements of this section; (iii) the County may terminate this contract immediately and without penalty and such termination shall not be or be considered a breach of this contract; and (iv) Contractor shall be liable for any additional costs incurred by the County as a result of the termination of the contract. Contractor acknowledges and understands that if the County terminates this contract in accordance with this Section, Contractor shall be ineligible for award of a public contract for at least one (1) year after the date on which the Agreement was terminated.

2.36. Public Entity Crimes

Pursuant to paragraph 287.133(2)(a), Florida Statutes, a person or affiliate who has been placed on the convicted vendor list following a conviction for a public entity crime may not submit a bid, proposal, or reply on a contract to provide any goods or services to a public entity; may not submit a bid, proposal, or reply on a contract with a public entity for the construction or repair of a public building or public work; may not submit bids, proposals, or replies on leases of real property to a public entity; may not be awarded or perform work as a contractor, supplier, subcontractor, or consultant under a contract with any public entity; and may not transact business with any public entity in excess of the threshold amount provided in section 287.017, Florida Statutes, for CATEGORY TWO for a period of thirty-six (36) months following the date of being placed on the convicted vendor list.

By entering into this contract, the Contractor represents and warrants that it is not on the convicted vendor list and not under investigation for violation of any state or federal law relating to public entity crimes. The Contractor further represents and warrants that its subcontractors and implementer, if any, are not on the convicted vendor list and not under investigation for violation of any state or federal law relating to public entity crimes.

2.37. Use of County Logo

The County owns and retains all proprietary rights in its logos, trademarks, trade names, and copyrighted images (Intellectual Property). As such, nothing in this Solicitation permits or shall be construed as authorizing Proposer to use or display County's Intellectual Property on Proposer's submittal documents or proposal (including any exhibits attached thereto) submitted to County by or on behalf of Proposer in response to this solicitation. The County has the right to redact the County Logo displayed on any Response.

2.38. Training

Unless otherwise specified suppliers/providers may be required at the convenience of, and at no expense to, the County to provide training to County personnel in the operation and maintenance of any item purchased as a result of this Solicitation.

2.39. Acceptance

Products purchased as a result of this Solicitation may be tested for compliance with specifications. Items delivered not conforming to specifications may be rejected and returned at Contractor's expense. Those items and items not delivered by the delivery date specified in accepted offer and/or purchase order may be purchased on the open market. Any increase in cost may be charged against the Contractor.

2.40. Safety Warranty

Any awarded Contractor including dealers, distributors, and/or manufacturers shall be responsible for having complied with all Federal, State, and local standards, regulations, and laws concerning the product or service specified, and the use thereof, applicable and effective on the date of manufacture or use or date in service including safety and environmental standards as apply to both private industry and governmental agencies.

2.41. Safety

The Contractor shall take the necessary precautions and bear the sole responsibility for the safety of the methods employed by the Contractor in performing the work. The Contractor shall, at all times, comply with the regulations set forth by federal, state, and local laws, rules, and regulations concerning "OSHA" and all applicable state labor laws, regulations, and standards. The Contractor shall indemnify and hold harmless the County from and against all liabilities, suits, damages, costs, and expenses (including attorney's fees and court costs) which may be imposed on the County because of the Contractor, Subcontractor, or supplier's failure to comply with the regulations.

2.42. Warranty

The Proposer agrees that, unless otherwise specified, the product and/or service furnished as a result of this Solicitation and award thereto shall be covered by the most favorable commercial warranty the Proposer gives to any customer for comparable quantities of such products and/or services and that the right and remedies provided herein are in addition to and do not limit any rights afforded to the Flagler County Board of County Commissioners by any other provision of the Solicitation/offer.

2.43. Award of RFP

The County reserves the right to award the Agreement to the Proposer(s) that the County deems to offer the best overall Proposal or solution, as defined in the solicitation section, Special Conditions - Evaluation Criteria. The County is therefore not bound to accept a proposal based only on lowest price. In addition, the County has the sole discretion and reserves the right to cancel this RFP, to reject any/all proposals, to waive any/all informalities and/or irregularities, or to re advertise with either the identical or revised specifications if it is deemed to be in the best interest of the County to do so. Nothing prohibits the County from rejecting and re soliciting when responses exceed budget, and the County must change the solicitation to lower costs. The

County also reserves the right to make multiple awards based on experience and/or qualifications of Proposers and to award only a portion of the items and/or services specified, if deemed to be in the County's best interest.

2.44. Other Agencies

All Contractors awarded contracts from this Solicitation may, upon mutual agreement, permit any municipality or other governmental agency to participate in an agreement under the same prices, terms, and conditions, if agreed to by both parties. It is understood that at no time will any city, municipality, or other agency be obligated for placing an order for any other city, municipality, or agency; nor will any city, municipality, or agency be obligated for any bills incurred by any other city, municipality, or agency. Further, it is understood that each agency will issue its own purchase order to the awarded Contractor(s).

2.45. County Facilities

County facilities are administrative facilities that provide services to the Flagler County public and any agencies that it serves. As such, activities in all buildings are critical to the provisioning of services to the public and shall not be interrupted by the Contractor's work activities.

2.46. Licenses, Certificates, and Permits

1. The County reserves the right to require proof that the Proposer is an established business and is abiding by the ordinances, regulations, and laws of their community and the state of Florida, such as but not limited to: Business Tax Receipts, business licenses, Florida sales tax registration, Federal Employers Identification Number, Registration with the Florida Department of State, and the Division of Corporations' Sunbiz at www.sunbiz.org.
2. The Proposer must be registered with the Florida Department of State Division of Corporations at www.sunbiz.org in order to provide services under the resulting contract.
3. If a license is required, the Proposer shall be licensed to perform the required work in accordance with the laws of the State of Florida and local ordinances. Proposer shall also verify that his/her subcontractors are licensed to perform the work in accordance with the laws of the State of Florida and local ordinances.
4. If applicable, the Proposer shall have a current professional registration certificate from the appropriate governing board. The Proposer must be properly registered at the time of its submittal to practice their profession in the State of Florida.
5. At time of Solicitation submittal, Proposer shall hold the required licensure to be the prime Contractor for all work to be performed under the resulting contract. If Proposer proposes to use a Subcontractor or sub-consultant to perform any work under the resulting contract such subcontractor and/or sub-consultant shall, at the time of Solicitation submittal, hold the required

licensure for all work to be performed under the resulting contract as a subcontractor and shall maintain such license(s) in full force and effect during the term of the resulting contract. All licenses and permits required to perform Contractor's duties under the resulting contract whether such license or permit is required by the federal government, State of Florida, Flagler County, or any municipality, shall be at Proposer's sole cost and expense, and shall not be a cost of the County. All required licenses and permits shall be maintained in full force and effect during the term of the resulting contract.

2.47. Records & Right to Audit

County shall have the right to audit the books, records, and accounts of Contractor and its Subcontractors that are related to the resulting contract. Contractor and its Subcontractors shall keep such books, records, and accounts as may be necessary in order to record complete and correct entries related to the resulting contract. Contractor shall preserve and make available, at reasonable times for examination and audit by the County, all financial records, supporting documents, statistical records, and any other documents pertinent to this contract for a retention period of five (5) years after completion or termination of the contract, and any renewals, as required by Item 65, General Records Schedule GS1-SL for State and Local Government Agencies, effective February 19, 2015 and the Florida Public Records Act (Chapter 119, Florida Statutes). Contractor shall, by written Contract, require its Subcontractors to agree to the requirements and obligations of this Section. Audits will be subject to applicable privacy and confidentiality laws and regulations and Contractor's privacy and confidentiality policies and procedures.

2.48. Claim Notice

The Contractor shall immediately report in writing to the County's designated representative or agent any incident that might reasonably be expected to result in any claim under any of the coverage mentioned herein. The Contractor agrees to cooperate with the County in promptly releasing reasonable information periodically as to the disposition of any claims, including a résumé of claims experience relating to all Contractor operations at the County project site. The designated representative for the County shall be:

Flagler County Board of County Commissioners

Human Resources/Risk Management Division

Address: 1769 E. Moody Blvd., Bldg. 2

Bunnell, Florida 32110

Telephone: 386-313-4035

Fax: 386-313-4107

2.49. Waiver and Limitation of Claims

Once the contract expires, or final payment has been requested and made, the awarded Contractor shall have no more than thirty (30) calendar days to present or file any claims against the County concerning the contract. After that period, any right to claims against the County by the Contractor concerning the contract are waived.

2.50. Compliance with Laws and Regulations

The Contractor shall be responsible to know and to apply all applicable federal and state laws, all local laws, ordinances, rules, regulations (including but not limited to the following statutes: Americans with Disabilities Act (ADA),Titles I, II and III of the ADA; Federal Immigration Reform and Control Act of 1986 (as amended); and Title VII of the Civil Rights Act of 1964 (as amended), and all orders and decrees of bodies or tribunals having jurisdiction or authority which in any manner affect the work, or which in any way affect the conduct of the work. Contractor shall observe and comply with all such laws, ordinances, rules, regulations, orders, and decrees for all work or services performed under the contract. The Contractor shall indemnify, defend and hold harmless the County and all its officers, agents, servants, and employees against any liability or claim made against the County arising from, or based on, the violation of any such law, ordinance, rule, regulation, order, or decree caused or committed by Contractor, its representatives, Subcontractors, sub-consultants, professional associates, agents, servants, or employees.
Pursuant to Section 287.05701, Florida Statutes, proposers are hereby notified that:

- The County shall not request documentation of or consider a vendors social, political or ideological interests when determining if the vendor is a responsible vendor: and
- The County may not give preference to a vendor based on the vendors social, political or ideological interests.

2.51. For Internet/Web Services

For the purposes of this paragraph, any services or products offered to public via the internet or online must comply with WCAG 2.0 AA in order to be deemed ADA compliant. The County will provide Contractor with prompt written notice with respect to any ADA deficiencies of which the County is aware and Contractor will promptly correct such deficiencies. If the County, the Department of Justice, or other governmental entity tasked with the enforcement of the ADA (“Enforcement Agency”) notes any deficiency in the facilities, practices, services, or operations of the Contractor furnished or provided in connection with this contract, Contractor shall, at no additional charge or cost to the County, immediately cure any such deficiencies without delay to the satisfaction of such Enforcement Agency. Contractor further agrees that it shall, to the extent permitted by law, indemnify, defend, and hold harmless the County against any and all claims, sanctions, or penalties assessed against the County, which claims, sanctions, or penalties arise or otherwise result from Contractor’s failure to comply with the ADA or WCAG 2.0 AA, for online or internet Services or products.

2.52. Scrutinized Companies-FL Statute Section 287.135 and 215.473

Contractor must certify that the company is not participating in a boycott of Israel. For contracts for goods or services of one million dollars or more, Contractor must also certify that Contractor is not on the Scrutinized

Companies that Boycott Israel List, not on the Scrutinized Companies with Activities in Sudan List, and not on the Scrutinized Companies with Activities in the Iran Petroleum Energy Sector List or has not been engaged in business operations in Cuba or Syria. The County will not contract for the provision of goods or services with (i) any company participating in a boycott of Israel, and (ii) for Contracts for goods or services of one million dollars or more, any other scrutinized company as described above. Submitting a false certification shall be deemed a material breach of contract. The County shall provide notice, in writing, to the Contractor of the County's determination concerning the false certification. The Contractor shall have five (5) calendar days from receipt of notice to refute the false certification allegation. If such false certification is discovered during the active contract term, the Contractor shall have ninety (90) days following receipt of the notice to respond in writing and demonstrate that the determination of false certification was made in error. If the Contractor does not demonstrate that the County's determination of false certification was made in error then the County shall have the right to terminate the contract and seek civil remedies pursuant to Section 287.135, Florida Statutes, as amended from time to time.

2.53. Human Trafficking Attestation Pursuant to Section 787.06, Florida Statutes

A duly authorized officer or representative of the Proposer (non-governmental entity) shall complete the included Flagler Human Trafficking Attestation Form in compliance with Section 787.06(13), Florida Statutes, (2024).

2.54. Modifications Due to Public Welfare or Change in Law

The County shall have the power to make changes in the contract as the result of changes in law and/or ordinances of Flagler County to impose new rules and regulations on the Contractor under the contract relative to the scope and methods of providing services as shall, from time to time, be necessary and desirable for the public welfare. The County shall give the Contractor notice of any proposed change and an opportunity to be heard concerning those matters. The scope and method of providing services as referenced herein shall also be liberally construed to include, but is not limited to, the manner, procedures, operations and obligations, financial or otherwise, of the Contractor. In the event any future change in Federal, State or County law or the ordinances of Flagler County materially alters the obligations of the Contractor, or the benefits to the County, then the contract shall be amended consistent therewith. Should these amendments materially alter the obligations of the Contractor, then the Contractor or the County shall be entitled to an adjustment in the rates and charges established under the contract. Nothing contained in the contract shall require any party to perform any act or function contrary to law. The County and Contractor agree to enter into good faith negotiations regarding modifications to the contract, which may be required in order to implement changes in the interest of the public welfare or due to change in law. When such modifications are made to the Agreement, the County and the Contractor shall negotiate in good faith, a reasonable and appropriate adjustment for any changes in services or other obligations required of the Contractor directly and demonstrably due to any modification in the contract under this clause.

2.55. Right to Require Performance

The failure of the County or Contractor at any time to require performance by the other of any provision hereof shall in no way affect the right of the County or Contractor thereafter to enforce same, nor shall waiver by the County of any breach of any provision hereof be taken or held to be a waiver of any succeeding breach of such provision or as a waiver of any provision itself.

In the event of failure of the Contractor to deliver services in accordance with the contract terms and conditions, the County, after due written notice, may procure the services from other sources and hold the Contractor responsible for any resulting additional purchase and administrative costs. This remedy shall be in addition to any other remedies that the County may have.

2.56. Force Majeure

Neither party shall be liable for any failure or delay in the performance of its obligations under the contract to the extent such failure or delay necessarily results from the occurrence of a Force Majeure Event beyond the control or reasonable anticipation of either party, including, but not limited to, compliance with any unanticipated government law or regulation not otherwise in effect at the time of execution of this contract, acts of God, acts of domestic or international terrorism, any virus, bacterium, or other microorganism capable of inducing physical distress, illness, or disease, whether due to a pandemic or otherwise, unforeseeable governmental acts or omissions, fires, strikes, natural disasters, wars, riots, transportation problems, and/or any other unforeseeable cause whatsoever beyond the reasonable control of the parties (and such cause being referred to as a “Force Majeure Event”). Accordingly, the parties further agree that:

1. Upon the occurrence of Force Majeure Event, the non-performing party shall be excused from any further performance of those obligations under this contract that are affected by the Force Majeure Event for as long as (a) the Force Majeure Event continues; and (b) the non-performing party continues to use commercially reasonable efforts to recommence performance whenever and to whatever extent possible without delay.
2. Upon the occurrence of a Force Majeure Event, the non-performing party shall notify the other party of the occurrence of such event and describe in reasonable detail the effect(s) of such event upon the party’s performance of its obligations and duties pursuant to this contract. Such notice shall be delivered or otherwise communicated to the other party within three (3) business days following the failure or delay caused by the Force Majeure Event, or as soon as possible after such failure or delay if the Force Majeure Event precludes the non-performing party from providing notice within such time period.
3. In the event of a Force Majeure Event, the time for performance by the parties under the applicable statement of work shall be extended for a period of time equal to the time lost by reason of such cause through execution of a Change Order pursuant to the terms of the contract.

2.57. Contractor's Personnel

1. The Contractor shall not discriminate against any employee or applicant for employment because of race, religion, color, sex, age, handicap, or national origin, except when such condition is a bona fide occupational qualification reasonably necessary for the normal operations of the Contractor. The Contractor agrees to post in conspicuous places, visible to employees and applicants for employment, notices setting forth the provisions of this nondiscrimination clause.
2. The Contractor, in all solicitations or advertisements for employees placed by or on behalf of the Contractor, shall state that such Contractor is an Equal Opportunity Employer.
3. The Contractor shall be responsible for ensuring that its employees, agents, and subcontractors comply with all applicable laws and regulations and meet federal, state, and local requirements related to their employment and position.
4. The Contractor certifies that it does not and will not during the performance of the contract employ illegal alien workers or otherwise violate the provisions of the federal Immigration Reform and Control Act of 1986, as amended.
5. Notices, advertisements, and solicitations placed in accordance with federal law, rule, or regulation shall be deemed sufficient for the purpose of meeting the requirements of this section.
6. The Contractor shall include the provisions of the foregoing paragraphs 3.59A.-E. above, in every subcontract or purchase order so that the provisions will be binding upon each Contractor.
7. The Contractor and any Subcontractor shall pay all employees working on this contract not less than minimum wage specified in the Fair Labor Standards Act (29 CFR 510-794) as amended.
8. The Contractor shall not disclose any information concerning the County, its products, services, personnel, policies, or any other aspect of its business learned by the Contractor or personnel furnished by the Contractor in the course of providing services pursuant to the contract which are not otherwise known to the general public.
9. Both Contractor and Subcontractors awarded a contract as a result of Local Preference, shall register all open positions related to this contract with the Center for Business Excellence (CBE), and submit appropriate affidavit showing compliance.

2.58. County/Contractor Relationship

1. Any awarded contractor shall provide the services required herein strictly under a contractual relationship with the County and is not, nor shall be, construed to be an agent or employee of the County. As an independent contractor, the awarded Contractor shall pay any and all applicable taxes required by law; shall comply with all pertinent Federal, State, and local statutes including, but not limited to, the Fair Labor Standards Act, the Americans with Disabilities Act, the Federal Civil Rights Act, and any and all relevant employment laws. The Contractor shall be responsible for

all income tax, FICA, and any other withholdings from its employees' or Subcontractor's wages or salaries. Benefits for same shall be the responsibility of the Contractor including, but not limited to, health and life insurance, mandatory Social Security, retirement, liability/risk coverage, and workers' and unemployment compensation.

2. The Contractor shall hire, compensate, supervise, and terminate members of its work force; shall direct and control the manner in which work is performed including conditions under which individuals will be assigned duties, how individuals will report, and the hours individuals will perform.

3. The Contractor shall not be provided special space, facilities, or equipment by the County to perform any of the duties required by the contract, nor shall the County pay for any business, travel, or training expenses or any other contract performance expenses not explicitly set forth in the specifications.

4. The Contractor, except as expressly set forth herein, shall not be exclusively bound to the County and may provide professional services to other private and public entities as long as it is not in direct conflict and does not provide a conflict of interest with the services to be performed for the County.

2.59. Disqualification of Proposers

1. Only one (1) Response from an individual firm, partnership or corporation under the same or under a different name will be considered. If a Proposer submitted more than one (1) Response for the work involved, all Responses submitted from such Proposer will be rejected.

2. Collusion among Proposers: If it is believed that collusion exists among the Proposers, the Responses of all participants in such collusion shall be rejected and no participants in such collusion will be considered in future proposals for the same work.

2.60. Debarment: Purpose and Intent

The County endeavors to solicit offers from, award contracts to, and consent to subcontracts with responsible vendors and contractors only. To further this policy, the County asserts its authority to debar certain vendors and contractors from participating in solicitations pursuant to the policies and procedures herein. The serious nature of debarment requires that this sanction be imposed only when it is in the public interest for the County's protection and not for purposes of punishment. Debarment is intended as a remedy in addition to, and not in substitution of, the evaluation of the responsibility of County vendors and contractors, and this policy and the procedures provided for herein shall not supplant or supersede County's authority to reject or otherwise terminate vendors or contractors based on findings of non-responsibility on a case-by-case basis.

2.61. Unit Prices and Interpretation

For the purpose of this Solicitation and evaluation of responses hereto the following shall apply:

Unit prices shall prevail over extended prices; written matter shall prevail over typed matter; numbers spelled in word form shall prevail over Arabic numerals ("one" over "1"). When not inconsistent with context words used in the present tense include the future, words in the plural number include the singular number, and words in the singular number include the plural number. The word "shall" is always mandatory and not merely directory.

2.62. Dispute Resolution

1. Good Faith Efforts to Resolve. The parties to this contract shall exercise their best efforts to negotiate and settle promptly any dispute that may arise with respect to this contract in accordance with the provisions set forth herein. The Contractor and County Project Manager shall use reasonable efforts to arrange personal meetings and/or telephone conferences as needed, at mutually convenient times and places, to address and work toward resolution of issues that arise in performance of this contract. Issues shall be escalated to successive management levels as needed.

2. Informal Dispute Resolution. If a dispute develops between the parties concerning any provision of this contract, or the interpretation thereof, or any conduct by the other party under these contracts, and the parties are unable to resolve such dispute within five (5) business days, that party, known as the Invoking Party, through its applicable Project Manager, shall promptly bring the disputed matter to the attention of the non-Invoking Party's Project Manager or designated representative, as the case may be, of the other party in writing ("Dispute Notice") in order to resolve such dispute.

3. Discovery and Negotiation / Recommended Procedures. Upon issuance of a Dispute Notice, the Project Managers or designated representative shall furnish to each other all non-privileged information with respect to the dispute believed by them to be appropriate and germane. The Project Managers or designees shall negotiate in an effort to resolve the dispute without the necessity of any formal proceeding. If such dispute is not resolved by the Project Managers or designees within five (5) County Work Days of issuance of the Dispute Notice, or such other time as may be mutually allowed by the Project Managers or designees as being necessary given the scope and complexity of the dispute, the Project Managers or designees may, depending upon the nature, scope, and severity of the dispute, escalate the dispute as indicated in Figure 1 below.

4. Formal Dispute Resolution. At any point after issuance of a Dispute Notice under this section, either party may request and initiate formal non-binding mediation before a single mediator, which mediation shall be completed within thirty (30) days of initiation or such longer time as may be agreed upon by both parties as being necessary for the mutual selection of a mediator and scheduling of such mediation. Any such mediation shall be convened and conducted in accordance with the rules of practice and procedure adopted by the Supreme Court of Florida for court-

ordered mediation, Rule 1.700 et seq. of the Florida Rules of Civil Procedure, and Chapter 44, Florida Statutes. If the dispute remains unresolved after conducting such mediation, then either party may proceed to finalize any pending termination remedies and commence litigation in a court of competent jurisdiction. Each party shall bear its own costs and attorney's fees for mediation of an issue arising under this contract.

5. Right to Terminate Reserved. Regardless of the dispute resolution procedures provided for in this Section, Dispute Resolution, nothing herein shall affect, delay, or otherwise preclude a party from terminating this contract in accordance with the provisions of Special Conditions, Termination, it being understood that these dispute resolution procedures are intended as a means of resolving disputes both during the term of this contract and after termination or expiration thereof.

Figure 1:

County Workdays	Contractor's Representative	County Representative
10	Contractor's Project Manager	County's Project Manager
10	Contractor's Sr. Vice President of Sales	Contract Compliance Officer
20	Contractor's COO or President	County Administrator

2.63. Authorized Signatory

Proposer acknowledges that the name and title of the signatory (the "Authorized Signatory"), as completed, is authorized to execute contracts/agreements with Flagler County, and that submitting a Response via the County's ePROCUREMENT PORTAL shall be the act of and attributable to the Authorized Signatory to bind the company. By submitting this Response electronically, the Authorized Signatory does thereby adopt the electronic or conformed submittal as authorized firm commitment and for use as an official record by Flagler County.

2.64. Revisions, Addenda, Questions & Answers

All answers to questions of substance will be publicly published via the County's ePROCUREMENT PORTAL, Question & Answer feature.

Participants are required to review all revisions and answers to questions published. Revisions within the Solicitation as well as responses posted through the Question & Answer feature are authoritative and shall be considered an addendum to the Solicitation. All information in this Solicitation, including information provided through the Question & Answer feature are incorporated into the Solicitation or any Contract resulting from this Solicitation.

2.65. Acknowledgement of Solicitation Tabulation

All responses accepted by Flagler County are subject to the County's Terms and Conditions. Any and all additional Terms and Conditions submitted by Proposer(s) are rejected and shall have no force and effect. Responses from the Proposer(s) listed on the tabulation are the only responses received timely as of the closing date and time. All other responses submitted in response to the solicitation, if any, are rejected as late.

2.66. Availability of Personnel

Personnel described in the proposal shall be available to perform the services as described. All personnel shall be the employees, or agents of the Proposer, and not employees or agents of Flagler County.

2.67. Assignment of Contract

The selected Proposer may not make any assignments of their obligations resulting from this RFP without the prior written authorization of Flagler County.

2.68. Gratuities and Kickbacks

It is prohibited for the Contractor or any agent acting at the behest of the Contractor to offer, give, or agree to give any Flagler County employee or former Flagler County employee, or for any Flagler County employee or former Flagler County employee to solicit, demand, accept, or agree to accept from another person, a gratuity or an offer of employment in connection with any decision, approval, disapproval, recommendation, or preparation of any part of a program requirement or a purchase request, or to influence the content of any specification or procurement standard, render advice, investigate, audit, or act in any other advisory capacity to the County.

It shall be unethical for any payment, gratuity, or offer of employment to be made by or on behalf of a subcontractor under a contract to the prime contractor or higher tier sub-contractor or any person associated therewith, as an inducement for the award of a subcontract or order.

2.69. Drug-Free Workplace Certification

By submitting a proposal in response to this RFP, Contractor certifies that Contractor’s company is a drug-free workplace in accordance with Florida Statute 287.087.

2.70. Proprietary/Restrictive Specifications

Prospective Proposers, who feel the specifications contained herein are proprietary or restrictive in nature, thus potentially resulting in reduced competition, must contact the Purchasing Division upon receipt of this Request for Proposals and prior to proposal opening. Specifications which are unrelated to performance will be considered for deletion via addendum to this Request for Proposals.

2.71. Certification of Independent Price Determination

By submission of this proposal, the Proposer certifies, and in the case of a joint proposal each party thereto certifies as to its own organization, that in connection with this procurement:

A. The prices in this proposal have been arrived at independently, without consultation, collusion, communication, or agreement for the purpose of restricting competition, as to any matter relating to such prices with any other proposer or with any competitor.

B. Unless otherwise required by law, the prices which have been quoted in this proposal have not been knowingly disclosed by the Proposer and will not knowingly be disclosed by the Proposer prior to opening, directly or indirectly to any other Proposer or to any competitor; and,

C. No attempt has been made or will be made by the proposer to induce any other person or firm to submit or not to submit a proposal for the purpose of restricting competition.

2.72. Employment of Former Flagler County Employees By Any Person, Business, Or Organization Contracting With Flagler County

It shall be a violation for any person, business or organization contracting with Flagler County to employ in any capacity, any former Flagler County employee or member of Flagler County employee's immediate family within one year of that employee's separation from employment with the County, unless the employer or the former County employee files with the County Clerk, the County’s Employment Disclosure Statement . The penalty for this violation may include disqualification of the proposal submission.

3. Special Terms and Conditions

3.1. Closing Date and Mandatory Pre-Bid Conference

A. Request for Proposal (RFP): Closing Date
Response must be received through the County's eProcurement Portal before 2:00 pm on Monday, August 24, 2026. Responses received after this time will not be considered.

B. Pre-Bid Conference

1. A mandatory pre-bid conference will be held in the David I. Siegel Adult Day Care Center 1000 Belle Terre Blvd Palm Coast, FL 32164, at 10:00 am on Wednesday, August 12, 2026.

2. Flagler County does not discriminate upon the basis of any individual's disability status. This non-discrimination policy involves every aspect of County's functions including one's access to participation, employment, or treatment in its programs or activities. In accordance with the American Disabilities Act and Section 286.26, Florida Statutes, persons with disabilities needing a special accommodation to participate in the proceedings, or an interpreter to participate in any proceedings, should contact the Office of Procurement and Contracts at (386) 313-4008 two (2) business days before any meeting date.

3.2. Authorized Official

The Request for Proposal (RFP) response and all required forms must be submitted/signed by an official authorized to legally bind the Respondent to all Request for Proposal (RFP) provisions. A Memorandum of Authority may be submitted to document that the individual is authorized to commit the firm to a contract.

3.3. Definition of Responsive and Responsible for this Solicitation

Each Response shall be evaluated for conformance as responsive and responsible using the following criteria:

A. Proper submittal of ALL documentation as required by this Request for Proposal (RFP). (Responsive)

B. The greatest benefits to Flagler County as it pertains to: (Responsible)

1. Total Cost;

2. Delivery;

3. Past Performance. In order to evaluate past performance, all Respondents are required to submit a list of three (3) references / relevant projects completed within the last three (3) years that are the same or similar in magnitude to this Solicitation. Flagler County shall not be listed as a reference;

4. All technical specifications associated with this Request for Proposal (RFP);

5. **Any other criteria that may be specific to your Request for Proposal (RFP), not necessarily everything specified here.**

Financial Stability: All Respondents shall be prepared to supply a financial statement upon request, preferably a certified audit of the last available fiscal year.

Respondents are reminded that award may not necessarily be made to the lowest Response. Rather, award will be made to the most/lowest responsive, responsible, Respondent whose Response represents the best overall value to the County when considering all evaluation factors.

3.4. Local Preference Availability

This project is funded by monies that prohibit the local preference provision and local preference does not apply per the General Terms and Conditions section Local Preference.

3.5. Payment Terms

1. The County will remit full payment on all undisputed invoices within forty five (45) days from receipt by the appropriate person(s) (to be designated at time of Agreement) of the invoice(s) or receipt of all products or services ordered.
2. Pursuant to Chapter 218.74, Florida Statutes, the County will pay interest not to exceed one percent (1%) per month on all undisputed invoices not paid within forty-five (45) days after the due date.

By submitting a Response to Flagler County, the Respondent expressly agrees that, if awarded an Agreement, the County may withhold from any payment monies owed by the Respondent to the County for any legal obligation between the Respondent and the County, including, but not limited to, real property taxes, personal property taxes, fees, and commissions.

3.6. Award Term

The County is looking to promote partnership relationships within the policies and procedures of public procurement. Pursuant toward that end, the successful Respondent shall be awarded an Agreement for an initial three (3) year term with the option for two (2) subsequent one (1) year renewals. All renewals will be contingent upon mutual written agreement and, when applicable, approval of the Board of County Commissioners.

3.7. Termination

A. County may terminate this Agreement upon written notice to the Contractor at least thirty (30) days prior to desired termination date.

B. Awarded Respondent may terminate this Agreement upon written notice to the County at least ninety (90) days prior to desired termination date.

C. Upon receipt of notice of termination by the County from awarded Respondent or upon delivery of notice of termination from the County to Contractor, awarded Respondent shall:

1. Stop work under the Agreement on the date and to the extent specified in County's Notice of Termination;

2. Inform County of the extent to which performance is completed;

3. Place no further orders or subcontracts for materials, services or facilities except as may be necessary for completion of such portion of the Work/Services under the Agreement as is not terminated and with the prior approval of the County; and,

4. Assign to the County, in the manner, at the times, and to the extent directed by the County, all of the rights, title, and interest of the awarded Respondent under the orders and subcontracts so terminated.

D. For all undisputed outstanding invoices submitted to the County prior to the effective date of the termination and subject to Section Award Term, Section Payment Terms and this Section, Termination, the County shall cause payments to be made to awarded Respondent within forty-five (45) days of receipt of invoice. Awarded Respondent shall invoice the County for any sums awarded Respondent claims to be owed by County under this Agreement for work performed from the last invoice to the effective date of termination. County shall review such invoice for payment and County shall pay any undisputed amount within forty-five (45) days.

E. With the approval of the County and to the extent required by the County, the awarded Respondent shall, upon termination, settle all outstanding liabilities and all claims arising out of such termination. County's approval of such settlements shall be final for all the purposes of a termination under this Section, Termination. In addition, awarded Respondent shall transfer title and deliver to the County, in the manner, at the times, and to the extent, if any, directed by the County, Deliverables, work-in-progress, reports, models, studies, and other materials produced as a part of, or acquired in connection with the performance of the Work/Services terminated.

F. If awarded Respondent fails to cure a breach within ten (10) calendar days after receipt of notice from the County of said breach, the County may take over the Work/Services and complete the Work/Services, and the awarded Respondent shall be liable to the County for any increased cost of the Project reasonably incurred by the County to complete the awarded Respondent's unfinished Work/Services. As such, the County may apply unpaid Compensation due and owing to the awarded Respondent prior to the default as a set off against the costs incurred by the County for taking over such Work/Services.

G. The right of termination provided to the County and the awarded Respondent herein shall be cumulative of all other remedies available at law.

H. All provisions of this Agreement which impose or contemplate continuing obligations on a party will survive the expiration or termination of this Agreement.

3.8. Damages

Due to the nature of the services to be provided and the potential impact to the County for loss, the awarded Respondent cannot disclaim consequential or special damages related to the performance of this Agreement. The awarded Respondent shall be responsible and accountable for any and all damages, directly or indirectly, caused by the actions or inaction of its employees, staff, or Subcontractors. There are no limitations to this liability.

3.9. Evaluation Method

The County will appoint a committee consisting of department staff to evaluate the proposals and to make recommendation to the Board of County Commissioners. The County will be the sole judge of its own best interests, the proposals, and the resulting Contract, if any. The County's decisions will be final. Award will be made to the proposal which presents the best value to the County based on the entire evaluation process and all the information gathered.

Note: Respondents are prohibited from contacting any of the committee members, other than the appropriate Procurement Coordinator prior to the recommendation of award from the committee.

3.10. Presentations by Respondents

1. Flagler County, at its sole discretion, may ask individual Respondents to make oral presentations and/or demonstrations without charge to the County.
2. The County reserves the right to require any Respondent to demonstrate to the satisfaction of the County that the Respondent has the fiscal and managerial abilities to properly furnish the services proposed and required to fulfill the requirements of the Request for Proposal (RFP). The demonstration must satisfy the County, and the County shall be the sole judge of compliance.
3. Respondents are cautioned not to assume that presentations will be required and should include all pertinent and required information in their original proposal package.

3.11. Proposal Acceptance/Rejection

The County reserves the right to accept or reject any or all proposals received as a result of this Solicitation, or to negotiate separately with competing Respondents, and to waive any informalities, defects, or irregularities in any proposal, or to accept that proposal or proposals, which in the judgment of the proper officials, is in the best interest of the County.

3.12. Proposal Acceptance Period

Any Proposal in response to this Request for Proposal (RFP) shall be valid through December 31, 2026. At the end of this time the proposal may be withdrawn at the written request of the Respondent if no award has been made. If the Proposal is not withdrawn at that time it remains in effect until an award is made or the solicitation is canceled regardless of the status of the proposal bond. The County reserves the right to request an extension of the proposals if a Contract has not been executed by December 31, 2026.

4. Insurance Requirements

4.1. Required Types of Insurance.

The Contractor shall purchase and maintain at its own expense, during the term of the Agreement, the types and amounts of insurance with limits no less than those shown in the Required Types and Limits of Insurance Chart associated with this solicitation, in the form and from companies satisfactory to the County. The Required Types and Limits of Insurance Chart is a listing and general summary of insurance policies required and is not intended to be comprehensive as to the requirements of each specific policy. Contractors shall review the additional requirements in this section and ensure that the insurance policies comply with the specific terms and conditions therein.

For the purposes of indemnification of the County or an endorsement or insurance coverage under this Agreement/Contract under which the County is a “named insured”, “additional named insured”, or “additional insured”, the term “County” includes Flagler County (a body corporate and politic and a subdivision of the State of Florida), including its districts, authorities, separate units of government established by law, ordinance or resolution, partners, elected and non-elected officials, employees, agents, volunteers, and any party with whom the County has agreed by contract to provide additional insured status.

The policy limits for all required policies in the Required Types and Limits of Insurance Chart shall apply separately from one another and shall not be shared with any other coverage line or reduce the aggregate limit of any other insurance coverage form required.

Regardless of anything submitted as proof of insurance, Contractor shall comply with all requirements as stated in the Solicitation and/or Contract documents.

4.2. Subcontractors and Independent Contractors.

All subcontractors & independent contractors utilized by Contractor to provide services to County and its employees under this Agreement/Contract shall be required to maintain all insurance policies with the same terms, conditions, and requirements required of the Contractor in the Required Types and Limits of Insurance Chart and described in this Solicitation.

4.3. Claims Made Basis Insurance Policies.

All insurance policies written on a Claims Made Form shall maintain a retroactive date prior to or equal to the effective date of the Agreement. The Contractor shall purchase a Supplemental Extended Reporting Period (“SERP”) with a minimum reporting period of not less than three (3) years in the event the policy is canceled, not renewed, switched to occurrence form, or any other event which requires the purchase of a SERP to cover a gap in insurance for claims which may arise under or related to the Agreement. The Contractor’s purchase of the SERP shall not relieve the Contractor of the obligation to provide replacement coverage. In addition, the Contractor shall require the carrier immediately inform the Contractor, the County Risk Manager, and the Office of Procurement and Contracts of any contractual obligations that may alter its professional liability coverage under the Agreement.

4.4. Risk Retention Groups and Pools.

Contractor shall not obtain an insurance policy required under this Agreement from a Risk Retention Group or Pool.

4.5. Minimum Required Policies and Limits.

Minimum underlying policies, coverages, and limits shall include all policies listed in the Required Types and Limits of Insurance Chart.

4.6. Additional Insured, Policies, Coverages, Limits, Primary and Non-Contributory Basis.

Under all insurance policies where the County is required to be an additional insured, the coverage and limits provided to the County under Contractor's insurance policies shall be that listed in the Required Types and Limits of Insurance Chart or the Contractor's actual limits, whichever is higher. All coverage provided to the County as an additional insured by said policies shall be primary and shall not be additional to or contributing with any other insurance or self-insurance maintained by the County or any other insurance contractually available for the benefit of the County. Contractors performing construction projects shall utilize ISO Forms CG 20 38 and CG 20 37, or their equivalents to provide additional insured status to the County and any party to whom the County is contractually bound to provide additional insured status under a commercial general liability policy.

4.7. Disposal of Materials.

If the services provided require the disposal of any hazardous or non-hazardous materials off the job site, the disposal site operator must furnish a certificate of insurance for Pollution Legal Liability with coverage for bodily injury and property damage for losses that arise from the facility that is accepting the waste under the Agreement.

4.8. Workers' Compensation.

Workers' Compensation insurance is required for all employees of the Contractor, employed or hired to perform or provide work or services under the Agreement or that is in any way connected with work or services performed under the Agreement, without exclusion for any class of employee, and shall comply fully with the Florida Workers' Compensation Law (Chapter 440, Florida Statutes, Workers' Compensation Insurance) and include Employers' Liability Insurance with limits no less than the statutory amount. Policy shall be endorsed with NCCI form WC 00 03 13 providing a waiver of subrogation in favor of the County. If Contractor is using a "leased employee" or an employee obtained through a professional employer organization ("PEO"), Contractor is required to have such employees covered by worker's compensation insurance in accordance with Florida Worker's Compensation law. The PEO shall endorse its workers compensation policy with NCCI form WC 00 03 13 providing a waiver of subrogation in favor of the County, its employees and insurers.

(1) Contractor and its Subcontractors, or any associated or subsidiary company doing work on County property or under the Agreement must be named in the Workers' Compensation coverage or provide proof of their own

Workers' Compensation coverage, without exclusion of any class of employee, and with a minimum of the statutory limits per occurrence for Employer's liability coverage. Further, if the Contractor's Subcontractors fail to obtain Workers' Compensation insurance and a claim is made against the County by the uncovered employee of said Subcontractor of the Contractor, the Contractor shall indemnify, defend, and hold harmless the County from all claims for all costs including attorney's fees and costs arising under said employee(s) Workers' Compensation insurance claim(s).

4.9. Commercial General Liability Insurance.

The Contractor shall obtain and maintain Commercial General Liability insurance, with limits of not less than the amounts shown in the Required Types and Limits of Insurance Chart. Contractor shall not obtain an insurance policy wherein the policy limits are reduced by defense and claim expenses. Such insurance shall be issued on an occurrence basis and include coverage for the Contractor's operations, independent contractors, and Subcontractors protecting itself, its employees, agents, Contractors or subsidiaries, and their employees or agents for claims for damages caused by bodily injury, property damage, or personal or advertising injury, and products liability/completed operations including what is commonly known as Coverages A and B. Such policies shall include coverage for claims by any person as a result of actions directly or indirectly related to the employment of such person or entity by the Contractor or by any of its Subcontractors arising from work or services performed under the Agreement. Policy shall include either contractual insurance or a designated contract contractual liability coverage endorsement, indicating expressly the Contractor's Agreement to indemnify, defend and hold harmless the County as provided in the Agreement. The commercial general liability policy shall provide coverage to County when it is required to be named as an additional insured either by endorsement or pursuant to a blanket additional insured endorsement, for those sources of liability which would be covered by the latest edition of the standard Commercial General Liability Coverage Form (ISO Form CG 00 01), as filed for use in the State of Florida by the Insurance Services Office, without the attachment of any endorsements excluding or limiting coverage for Bodily Injury, Property Damage, Products/Completed Operations, Independent Contractors, Property of County in Contractor's Care, Custody or Control or Property of County on which contracted operations are being performed, Explosion, Collapse or Underground hazards (XCU Coverage, Contractual Liability or Separation of Insureds.

For construction related projects, County shall be added as additional insured to Contractor's policy by both ISO Endorsements CG 20 38 (Premises & Operations) and CG 20 37 (Products & Completed Operations) or their equivalents. If County has agreed by separate contract to require Contractor to name another party as an additional insured, Contractor shall add said party as an additional insured to the commercial general liability policy by ISO Endorsement CG 20 38 and CG 20 37, or their equivalents.

For non-construction projects, Contractor shall add County as additional insured by both ISO Endorsements CG 20 10 (Premises & Operations) and CG 20 37 (Products & Completed Operations) or their equivalent. If County has agreed by separate contract to require Contractor to name another party as an additional insured, Contractor shall add said party as an additional insured to the commercial general liability policy by both ISO Endorsement CG 20 10 and CG 20 37 or their equivalents.

All commercial general liability policies shall be endorsed to provide a waiver of subrogation in favor of the County and any other party required by this Agreement to be named as an additional insured.

4.10. Motor Vehicle Liability.

The Contractor shall secure and maintain during the term of the Agreement a motor vehicle liability policy with a combined single limit of no less than the amounts shown in the Required Types and Limits of Insurance Chart for bodily injury and property damage arising from the ownership, maintenance, or use of a motor vehicle. Policy shall be written with Coverage Symbol 1 (Any Auto), providing coverage for all autos operated regardless of ownership, or with Coverage Symbols 7, 8, & 9 (Scheduled, Hired, & Non-Owned vehicles). The County shall be an additional insured under this policy when required in the Required Types and Limits of Insurance Chart. If Motor Vehicle Liability is by endorsement to another policy required in the Required Types and Limits of Insurance Chart, then the limits for Motor Vehicle Liability shall be separate (they shall not be shared) and in addition to the underlying policy limits. If endorsed to another policy required in the Required Types and Limits of Insurance Chart, Motor Vehicle Policy Limits shall apply on a per occurrence basis and shall not have an aggregate limit.

4.11. Professional Liability.

The Contractor shall ensure that it secures and maintains, during the term of the Agreement, Professional Liability insurance with limits of no less than the amount shown in the Required Types and Limits of Insurance Chart in respect only to the project(s) contemplated by the Agreement. Such policy shall cover all the Contractor's or its Subcontractor's professional liabilities whether occasioned by the Contractor or its Subcontractors, or its agents or employees. For Contractors providing Architectural and Engineering related services, policy shall be broad enough to include errors and omissions specific to Contractor's professional liability for direct and contingent design errors and Architect's/Engineers professional liability with no exclusions for design-build work.

If the Contractor fails to secure and maintain the professional liability insurance coverage required herein, the Contractor shall be liable to the County and agrees to indemnify, defend, and hold harmless the County against all claims, actions, losses or damages that would have been covered by such insurance. The County shall be an additional insured under this policy when required in the Required Types and Limits of Insurance Chart.

4.12. Primary and Excess Coverage.

Any insurance required may be provided by primary and excess insurance policies.

4.13. General Insurance Requirements.

A. All insurance policies shall be issued by insurers licensed and/or duly authorized under Florida Law to do business in the State of Florida and all insuring companies are required to have a minimum rating of A- and a Financial category size of VIII or greater in the "Best Key Rating Guide" published by A.M. Best & Company, Inc.

B. Approval by County of any policy of insurance shall not relieve Contractor from its responsibility to maintain the insurance coverage required herein for the performance of work or services by the Contractor or its Subcontractors for the entire term of the Agreement and for such longer periods of time as may be required under other clauses of the Agreement.

C. **Waiver of Subrogation**. The Contractor hereby waives all rights against the County and its Subcontractors for damages by reason of any claim, demand, suit or settlement (including workers' compensation) for any claim for injuries or illness of anyone, or perils arising out of the Agreement. The Contractor shall require similar waivers from all its Subcontractors. Contractor's insurance policies shall include a waiver of subrogation in favor of the County. This provision applies to all policies of insurance required under the Agreement (including Workers' Compensation, and general liability).

D. **County Not Liable for Paying Deductibles**. For all insurance required by Contractor, the County shall not be responsible or liable for paying deductibles for any claim arising out of or related to the Contractor's business or any Subcontractor performing work or services on behalf of the Contractor or for the Contractor's benefit under the Agreement.

E. **Cancellation Notices**. During the term of the Agreement, Contractor shall be responsible for promptly advising and providing the County Risk Manager and the Office of Procurement and Contracts with copies of notices of cancellation or any other changes in the terms and conditions of the original insurance policies approved by the County under the Agreement within two (2) business days of receipt of such notice or change.

F. **Deductibles and Self-Insured Retentions**.

1. Contractors that maintain and administer a self-insured retention or a large deductible formal program exceeding the insurance requirements listed in the Required Types and Limits of Insurance Chart to fund either program may submit an exception request in accordance with the solicitation section detailing Revisions, Addenda, Questions & Answers to be considered for this solicitation. The request must include a summary of the program's design and funding method to manage fund deductibles or self-insured retentions. If additional information is necessary, the County will request more specific information, which must be provided by the Contractor. The County Risk Manager will review the information submitted and determine whether the program is acceptable to the County.

2. Contractors with no formal risk management program in place to manage and fund deductibles or self-insured retentions may not be considered.

3. Subject to County approval, Contractor may obtain a letter of credit in the amount equivalent to the deductible, which shall remain in effect during the term of the Agreement at no additional cost to the County.

G. Contractor's obligations or services shall not be construed to negate, abridge, or reduce other rights or obligations of indemnity or insurance defense of additional or named insureds which would otherwise exhaust or be unavailable as to a party or person described in this Contract.

4.14. Proof of Insurance.

A. The Contractor shall be required to furnish evidence of all required insurance in the form of certificates of insurance, which shall clearly outline all hazards covered as itemized herein, the amounts of insurance applicable to each hazard and the expiration dates.

B. The Contractor shall furnish proof of insurance acceptable to the County prior to or at the time of execution of the Agreement and the Contractor shall not commence work or provide any service until the Contractor has obtained all the insurance required under the Agreement and such insurance has been filed with and approved by the County. Upon request from the County, the Contractor shall furnish copies of all required policies and any changes, endorsements, or amendments thereto, immediately, to the County, the County Risk Manager, and Purchasing and Contracts Divisions, prior to and any time after the commencement of any contractual obligations. The Agreement may be terminated by the County, without penalty or expense to County, if at any time during the term of the Agreement proof of any insurance or copies of any insurance policies required hereunder are not provided to the County upon request.

C. All certificates of insurance shall clearly indicate that the Contractor has obtained insurance of the type, amount and classification required by this Section. No work or services by Contractor or its Subcontractors shall be commenced until County has approved these policies or certificates of insurance. Further, the Contractor agrees that the County shall make no payments pursuant to the terms of the Agreement until all required proof or evidence of insurance has been provided to the County. The Agreement may be terminated by the County, without penalty or expense, if proof of any insurance required hereunder is not provided to the County.

D. The Contractor shall file replacement certificates with the County at the time of expiration or termination of the required insurance occurring during the term of the Agreement. In the event such insurance lapses, the County expressly reserves the right to renew the insurance policies at the Contractor's expense or terminate the Agreement but County has no obligation to renew any policies.

E. The provisions of these sections, Required Types of Insurance; Insurance Requirements; and Proof of Insurance, shall survive the cancellation or termination of the Agreement.

4.15. Provide Proof of Insurance.

Provide Proof of Insurance - evidence of required insurance coverage or proof of insurability in the amounts indicated. If available, a properly completed ACORD Form is preferable. Upon award, final forms must contain the correct solicitation and/or project number and Flagler County contact person.

Firms that have owner/operators that have filed a "Notice of Election to be Exempt" shall submit a copy of the notice with the response.

4.16. Insurance Requirement

Before execution of the Agreement by the County and commencement of the operations and/or services to be provided, and during the duration of the Agreement, the Contractor shall file with the County current certificates of all required insurance on forms acceptable to the County, which shall include the following provisions:

A. All insurance policies shall be issued by companies authorized to do business under the laws of the State of Florida and acceptable to the County.

B. The Certificates shall clearly indicate that the Contractor has obtained insurance of the type, amount and classification as required for strict compliance with this insurance section.

C. No material change or cancellation of the insurance shall be effective without thirty (30) days prior written notice to the County.

The Contractor shall require and ensure that each of its subcontractors providing services here under (if any) procures and maintains, until the completion of the services, insurance of the types and to the limits specified herein.

Coverage Required – Unless otherwise specified, the Contractor shall, at its sole expense, maintain in effect at all times during the performance of the services insurance coverage with limits not less than those set forth below and with insurers and under forms of policies satisfactory to County.

Coverage

Minimum Amounts and Limits

- Worker's Compensation
  - Statutory requirements at location of Work
- Employer's Liability
  - $ 1,000,000 each occurrence
  - $ 1,000,000 disease, aggregate
  - $ 1,000,000 disease, each employee
- Commercial General Liability
  - $ 2,000,000 General Aggregate
  - $ 2,000,000 Products-Comp. Ops Aggerate

- $ 1,000,000 Each Occurrence
- $ 500,000 Fire Damage
- $ 0 Medical Expense

- Automobile Liability
  - $ 1,000,000 Combined Single Limit (owned, hired and non-owned)
  - Option of Split Limits:
    - Bodily Injury
      - $ 1,000,000 per Person
      - $ 1,000,000 per Accident
    - Property Damage
      - $ 1,000,000

- Professional Liability
  - $ 1,000,000 per claim
  - $ 1,000,000 annual aggregate (when applicable)

Insurance carrier(s) must have a minimum financial rating of A-.

Coverage shall apply to the indemnity provided to Flagler County and shall include Flagler County its officers and employees, as additional insureds, as regards to liability arising out of the Contractor's performance of the work or the work performed by others on behalf of the Contractor under this Agreement. The insurance afforded to the County shall state that it is primary insurance and shall provide for a severability of interest or cross-liability clause. Prior to entering into the Agreement with the County, the Contractor shall furnish County with Certificates of Insurance (identifying on the face thereof the Project name and Agreement number) as evidence of the above required insurance and such Certificates shall include the following language: Flagler County BOCC as additional insured and an endorsement for which has been issued, subject to a requirement for recurring certificate of insurance every fifteen (15) days from the contract award date until, all obligations under the Contract/Agreement are completed.

Alternatively, in lieu of recurring certificates, the Contractor or Contractor may provide a certificate of insurance that contains a provision that coverage afforded under the policies will not be cancelled until at least thirty (30) days prior written notice has been given to the County, except that in the event of cancellation for nonpayment of premium the County shall receive notice as prescribed by state law (10 days). The cancellation clause should read as follows: “Should any of the described policies be canceled or material modified before the expiration date thereof, the issuing company will mail 30 day prior written notice to the

certificate holder named below, except that in event of cancellation for nonpayment of premium, the notice shall be 10 days unless a longer time is prescribed by Florida Statute."

The County will not maintain any insurance on behalf of the Contractor covering loss or damage to the work or to any other property of the Contractor.

None of the requirements contained herein as to types, limits and approval of insurance coverage to be maintained by the Contractor are intended to and shall not in any manner limit or qualify the liabilities or obligations assumed by the Contractor under the Agreement.

The Contractor shall deliver the original Certificate of Insurance and one copy to the agent of the County.

Notices, in original and one copy, of cancellation, termination and alteration of such policies shall also be provided to the agent of the County.

5. Scope of Work

5.1. Scope of Work

PROJECT BACKGROUND & OPERATIONAL FRAMEWORK

Core Objective

The selected vendor shall operate a community-based adult day care program designed to provide a structured, protective environment for eligible adults (e.g., individuals aged 60+ or adults living with cognitive or physical disabilities). The program's goal is to maximize participant autonomy, offer vital social and therapeutic engagement, prevent unnecessary institutionalization, and provide essential respite for primary family caregivers.

Facility Capacity Allocation

The physical facility has an established maximum legal occupancy constraint.

Maximum Permitted Capacity: 30 participants daily.

All operational layouts, physical configurations, dining schedules, and emergency exit routes must be optimized for this maximum capacity threshold.

County-Provided Infrastructure

To facilitate a sustainable local service pipeline, Flagler County provides structural support to the selected vendor:

Low-Cost Lease: The County offers access to the licensed day care space at a heavily reduced, below-market rental rate. Current rental rate is projected to be $500/mo., or $6000/yr, and may be waved for the first year of operations.

Structural Maintenance: The County maintains responsibility for major structural building systems (e.g., roof integrity, exterior walls, landscaping, and central HVAC system replacements). The applicant will be responsible for day-to-day internal upkeep of the facility, cleanliness, decorations, program supplies and the like.

Operational Self-Sufficiency Constraints

No Direct County Funding: No operational subsidies, baseline grants, financial draws, or direct service fee reimbursements will be provided by Flagler County. Referrals from interested and eligible Older Americans Act and State General Revenue grants (ADI, CCE, HCE) will be provided as available and applicable.

Independent Business Unit: The selected applicant must operate purely as a self-sustaining business entity. The operator is solely responsible for generating all revenue via third-party billings, private fees, and alternative grant funding to cover all operational overhead, labor, utilities, and programmatic costs.

REGULATORY TRANSITION & CONTINUITY MINIMUMS

The selected applicant must maintain seamless continuity of care for active program participants and legally assume operational control of the facility license without experiencing service disruptions or temporary closures.

A. AHCA Change of Ownership (CHOW) Requirements

The selected vendor must navigate and execute the license transition through the Florida Agency for Health Care Administration (AHCA) under Chapter 429, Part III, Florida Statutes, and Chapter 59A-16, Florida Administrative Code (F.A.C.):

- Application Timeline: Submit a comprehensive, complete Change of Ownership (CHOW) application via the AHCA Online Licensing System Portal at least 60 days prior to the anticipated operational transfer date.
- Financial Competency Verification: Complete and submit ACHA Form 31-00-0009 (Proof of Financial Ability to Operate). The applicant must verify sufficient liquid assets to cover all projected facility operating expenses (including utilities, vendor accounts, and staff payroll) for the initial 90 days of operation without relying on immediate accounts receivable or collections.
- Legal Transfers: Provide fully executed Asset Purchase Agreements, Bills of Sale, or Lease-Transfer Documents establishing a clear line-of-ownership transfer between the outgoing operator and the applicant.
- Liability & Corrections: Assume immediate operational responsibility for and submit an approved Plan of Correction (PoC) to AHCA for any outstanding compliance citations or deficiencies left by the preceding license holder. No citations or deficiencies exist at the time of this RFP.
- Background Clearances: Ensure all executive officers, program directors, board members, and financial stakeholders holding a 5% or greater interest have passed a Level 2 background screening via the AHCA Care Provider Background Screening Clearinghouse prior to contract signing.

B. Florida Medicaid MLTC Provider Continuity

Because the core target population relies heavily on home and community-based waiver services, the selected provider must satisfy the following Medicaid criteria:

- Active Enrollment: Establish and/or maintain active status on the AHCA Provider Master List (PML) with a valid Florida Medicaid Provider ID.
- SMMC Region B Credentialing: Secure, transfer, or maintain active provider network contracts with the authorized Statewide Medicaid Managed Care (SMMC) 3.0 Long-Term Care (LTC) managed care organizations serving Region B (Flagler County) through the 2030 contract cycle:

- Sunshine Health
- Simply Healthcare
- Humana
- Florida Community Care (FCC)
- UnitedHealthcare Community Plan

- Continuity of Care Mitigation: Detail an explicit risk-mitigation strategy to safely navigate participant billing during the standard regional 90-day "Continuity of Care" window if an existing client shifts from the incumbent operator to their organization while insurance credentials are being finalized.
- HCBS Settings Rule Adherence: Comply with federal Centers for Medicare & Medicaid Services (CMS) Home and Community-Based Services (HCBS) regulations. The program structure must optimize participant autonomy, independence, privacy, and integration into the broader local community.

STAFFING CONFIGURATIONS & MATRICES

The selected vendor must maintain staffing configurations that comply strictly with Rule 59A-16.005, F.A.C. Based on a maximum permitted daily census of 30 clients, the proposal must fulfill the following structured staffing matrix:

SUGGESTED DAILY STAFFING LAYOUT (MAX 30 CAPACITY)	
1. Core Center Director	1 Full-Time Equivalent (FTE)
2. Direct Care Staff (1:6)	5 FTE Awake, Direct-Care Personnel
Specialized Memory (1:5)	1 FTE of 5 if serving Alzheimer's/Dementia
3. Licensed Healthcare (RN/LPN)	1 PRN, but ideally dedicated Shift position

A. General Direct Care Staff Ratio (1:6 Ratio)

- Minimum Metric: A minimum ratio of one (1) staff member who provides direct services for every six (6) participants must be present at the facility at all times.
- Full Capacity Requirement: For a maximum census of 30 clients, the applicant must schedule a minimum of five (5) awake, direct-care personnel on-site daily during operating hours.

B. Specialized Alzheimer’s/Dementia Care Ratio (1:5 Ratio)

- Minimum Metric: For any sub-population of participants diagnosed with Alzheimer's disease or related forms of dementia, the facility must increase staffing to one (1) direct service staff member for every five (5) memory care participants.
- Capacity Impact: If the applicant intends to dedicate a portion of the 30-client slot allotment to specialized dementia care, the staffing layout would adjust upward. Example: An active daily census of 20 general clients (4 staff) and 10 memory-care clients (2 staff) will require 6 direct care staff members.

C. Mandated Core Roles (Non-Delegable)

- Center Director (1 FTE): Responsible for daily administration. The director cannot be dual-counted as primary direct-care staff if the active census regularly exceeds 12 participants.
- Licensed Healthcare Personnel: The applicant must secure a Registered Nurse (RN) or Licensed Practical Nurse (LPN) to manage medication administration, perform health screenings, and coordinate care plans under Florida AHCA rules.

DETAILED SCOPE OF WORK (SOW) OPERATIONS

The selected vendor shall perform all duties, services, and responsibilities detailed below. Proposals shall address all of the following aspects of the scope of work.

A. Core Operating Schedule

- Mandatory Operational Hours: The facility shall remain open to participants from 9:00 AM to 4:30 PM, Monday through Friday, excluding County-designated holidays.
- Service Availability: The vendor must ensure staff are on-site at least 30 minutes prior to opening (8:30 AM) and remain until all participants are safely discharged or boarded onto transit vehicles at the end of the day.

B. Participant Intake, Assessment, and Care Planning

- Eligibility and Intake Screening: Conduct comprehensive pre-admission screenings to ensure applicants meet adult day care criteria. Participants must not require 24-hour continuous bed confinement or pose a physical threat to themselves or others.
- Individualized Plan of Care (POC): Develop a written POC for each participant within 30 days of admission. The POC must be co-signed by the participant’s primary physician or managed care case manager. It must document specific goals, physical limitations, behavioral interventions, and required assistance levels.

- Mandatory Reassessments: Conduct formal reviews and updates of each participant's POC every six (6) months, or immediately following any significant change in the individual's physical or mental health status.

C. Clinical, Health, and Medication Management

- Nursing Oversight: Provide on-site or contracted nursing coverage (RN or LPN) to perform daily health monitoring, including vital sign checks, blood sugar monitoring, and weight tracking as specified by individual care plans.
- Medication Administration: Securely store and administer medications in strict compliance with Rule 59A-16.005(4), F.A.C. All administrations must be executed by licensed medical professionals or properly certified staff under RN oversight.
- Medication Administration Records (MAR): Maintain a flawless, real-time MAR for each participant. Document the drug name, dosage, route, exact time of administration, and the signature of the administering staff member.
- Medical Emergency Response: Establishing and maintaining an active contract with a medical director or regional emergency response system is highly encouraged, at minimum ensuring all staff hold active CPR and First Aid certifications at all times.

D. Activities of Daily Living (ADLs) & Personal Care Assistance

- Direct Care Support: Provide respectful, hands-on assistance with basic Activities of Daily Living (ADLs). This includes ambulation, transfers, eating, grooming, and specialized toileting or incontinence care. Use of restraining techniques (hands on) and/or assistive mechanisms is not sought, but if it is part of an applicant proposal, all aspects of this practice and related regulatory compliance must be adequately addressed in the proposal
- Restorative Care Maintenance: Implement simple, routine range-of-motion exercises, scheduled walking regimens, and hydration tracking to prevent physical decline and maintain participant independence.

E. Therapeutic, Social, and Memory Care Programming

- Daily Structured Activities: Design and execute a minimum of three (3) hours of scheduled therapeutic activities per day. Activities must cater to varying cognitive and physical functional levels, including arts, music, gentle physical fitness, and socialization.
- Specialized Dementia Programming: Provide distinct, physically segregated cognitive stimulation programs for participants diagnosed with Alzheimer's or related dementias. These programs must focus on validation therapy, memory orientation, and wandering mitigation within a secure perimeter.

F. Nutritional and Dietary Services

- Meal Requirements: Provide a minimum of one (1) hot, nutritionally balanced meal and two (2) healthy snacks during the designated operational day. Meals must fulfill at least one-third (1/3) of the Recommended Dietary Allowances (RDA) for adults.
- Therapeutic and Modified Diets: Accommodate medically prescribed modified diets, including mechanical soft, pureed, low-sodium, and diabetic menus.
- Sanitation Standards: Ensure all food storage, preparation, and kitchen operations comply fully with Florida Department of Health (DOH) Chapter 64E-11 guidelines. Keep valid DOH food service permits posted at all times.

G. Facility Operations, Maintenance, and Security

- Utility Financial Responsibility: Pay all facility utility costs—including electricity, water, sewer, internet, and telephone service—directly to providers. Maintain separate utility tracking distinct from corporate overhead.
- Internal Maintenance and Janitorial Services: Provide daily interior janitorial care, deep cleaning, and waste removal. Keep the building clean, odor-free, and fully sanitized. Maintain all internal program-specific equipment (such as lift chairs, medical carts, and kitchen appliances) at the vendor's expense.
- Physical Security: Secure all exterior exit points with delayed-egress magnetic locks or keypad security systems. This ensures a safe environment and prevents elopement of memory-care participants, in full compliance with local fire codes.
- Assume and ensure all regulatory compliance, oversight and respective liability in the day to day operations, licensing, and administration of Adul Day Care, per pertinent state statute and regulations.

H. Safe Transportation Services

- Transit Coordination: Coordinate with Flagler County Transportation, family/caregivers and other appropriate parties to ensure portal-to-portal transportation for participants traveling between their residences in Flagler County and the adult day care center. Coordination with Senior Services Division is also encouraged and available.
- Vehicle Compliance: Ensure all transit vehicles used are ADA-accessible, equipped with functional wheelchair lifts/tie-downs, climate-controlled, and regularly maintained.

I. Emergency Activation & Disaster Assistance Response

- Hurricane and Evacuation Shelter Support: In the event of local hurricane activations, severe weather emergencies, or mandatory county evacuations ordered by Flagler County Emergency Management, the County may request the vendor to assist in emergency shelter operations.

- Feasibility-Based Care Coordination: As feasible and safe given regional conditions, the vendor may be asked to coordinate the safe transfer, tracking, and temporary continuity-of-care support for active adult day care participants placed within designated County medical-needs or public emergency shelters.
- Disaster Plan Submission: The vendor must submit an updated, comprehensive Emergency Preparedness Plan annually to the Flagler County Emergency Management Division for review and local approval.

FINANCIAL REPORTING & ACCOUNTABILITY

Because the County provides the physical infrastructure, the vendor must maintain transparent fiscal practices to prove long-term viability:

- Segregated Accounting Systems: Maintain distinct, auditable financial records specifically for this facility location, applying standard Generally Accepted Accounting Principles (GAAP).
- Annual Audited Financial Statements: Submit an annual financial audit compiled by an independent Certified Public Accountant (CPA) to the County Contract Manager within 120 days of the fiscal year-end.
- Monthly Facility Utility Cost Validation: Provide timely proof of payment for all building utilities, which must be tracked independently from corporate administrative overhead.

6. Proposal Submittal Requirements

6.1. Provider's Qualifications and Experience

Provider’s qualifications, experience and past Provider performance related to providing the type of services requested in this solicitation.

The Provider will be required to demonstrate a comprehensive set of qualifications to ensure they are capable of delivering high-quality Adult Day Care Program.

The Contractor must have a minimum of 5 years’ experience in providing services to individuals diagnosed, showcasing a strong background in therapeutic care and health supervision.
Specifically, the Provider must provide evidence of a well-established track record in operating adult day care programs or similar services.

This includes a history of successfully designing and managing therapeutic programs that address the cognitive, physical, and emotional needs of individuals.

The Provider must also demonstrate expertise in developing individualized care plans that cater to the unique needs of each participant, ensuring that all activities are tailored to enhance their quality of life and well-being.

Provider must show evidence of its organizational capacity to manage the program effectively, including a clear administrative structure and support system to ensure smooth operations.

The Provider should also provide proof of their ability to manage legal and financial responsibilities, particularly in terms of making site improvements to meet required codes for health, safety, and accessibility.

The applicant will also need to demonstrate strong communication skills, including the ability to collaborate effectively with the City, caregivers, family members, and community partners.

The Provider must be committed to providing regular updates on program progress, participant outcomes, and any challenges encountered, ensuring transparency and accountability throughout the project.

6.2. Organizational Profile and Project Team Qualifications

Provider's approach to providing the requested scope of services.

Provider must provide a qualified team of professionals with relevant certifications, such as Registered Nurses (RNs), Licensed Practical Nurses (LPNs), or Certified Nursing Assistants (CNAs), and staff members trained in Alzheimer’s disease or related dementia care. These professionals should have experience in supervising participants, administering medication, assisting with activities of daily living, and addressing the medical and behavioral needs of individuals with Alzheimer’s disease or related dementia.

The operational staff provided by the applicant will play a critical role in ensuring the effective and safe operation of the Adult Day Care Program at the David I. Siegel Center. The staff must be qualified and capable

of delivering high-quality care to individuals, as well as providing support to their caregivers. The staff will consist of a variety of professionals, including an administrator, nursing staff, direct care workers, and support staff, each of whom must meet specific educational and licensing requirements to comply with state and local regulations.

The following areas must be addressed:
1. Identify the staff involved in the project, including identification of the bidder's project manager. The specific individuals who will work on this project must be identified, along with the nature and extent of their involvement.
2. Summarize their qualifications related to specific requirements of this project.
3. Resumes of professional staff must be included. 4. Job descriptions for all project staff must be included. Descriptions must include the hours the staff person works each week and the number of hours assigned to this program each week.
5. A Program Organizational Chart must be included. If you operate more than one program, also include an Agency Organizational Chart showing the line of authority.
6. The specific individuals who will work on this project must be identified, along with the nature and extent of their involvement. The qualifications of these individuals shall be presented (in resumes or other formats).

If conducting this project will require hiring of one or more individuals who are not currently employed by the bidding organization, applications shall provide detailed job descriptions, including required qualifications and experience.

If subcontractors are to be used, the proposal shall also contain similar information regarding each subcontractor

6.3. Approach and Methodology

Professional experience and qualifications of key personnel that will be assigned to this project.

The Provider must provide a comprehensive description of their organization's expertise in the area of adult day care services.
This includes detailed information on the organization's experience in operating similar projects, demonstrating a proven track record in designing and implementing therapeutic care programs that address the unique needs of individuals to include individuals with Alzheimer's disease or related dementia.

The Provider must outline their capacity to provide high-quality, person-centered care in a structured, supportive environment that promotes cognitive, emotional, and physical well-being. A key requirement is the inclusion of a summary of similar current and completed projects, to include any projects that focus on dementia or Alzheimer's care. The Provider should highlight any ongoing or past adult day care programs, therapeutic services for individuals with cognitive impairments, or similar health and wellness programs aimed at improving quality of life for elderly or vulnerable populations.

For each project, the applicant should provide the following: project name, client or organization served, scope of services, the number of participants, and any measurable outcomes or successes achieved. This will

help demonstrate the organization's ability to effectively manage and deliver services on a similar scale and complexity to the Adult Day Care Program at David I. Siegel Center.

The Provider should also provide evidence of its capacity to manage both the operational and regulatory requirements of such programs, including compliance with state and local adult day care regulations. Examples of successful projects, particularly those that involved improvements to facilities, adherence to health and safety standards, or the integration of community-based care strategies, will strengthen the Provider's qualifications.

The Provider should also demonstrate their ability to handle the financial and administrative aspects of the program, ensuring sustainability and efficient management. The organization's experience in overseeing program staffing, including qualified professionals trained in dementia care, as well as their approach to caregiver support, will be important factors in evaluating their qualifications. The County seeks a Provider that can leverage this experience to create a program that meets both the immediate and long-term needs of participants, while collaborating effectively with County staff, caregivers, and other community stakeholders. Past performance references, along with detailed descriptions of similar projects, will be critical in assessing the Provider's qualifications and suitability for this important role.

6.4. Past Performances and References

Provide at least three references, preferably from government entities, for projects with similar scope of services.

Applicants must provide evidence of their past performance and include references to demonstrate their ability to successfully deliver high-quality adult day care services, to include services for individuals with dementia or Alzheimer's disease. Submissions should highlight the applicant's demonstrated success in managing similar programs, including specific examples of services provided, populations served, and outcomes achieved.

Applicants should provide data or testimonials that showcase their expertise in developing and implementing therapeutic activities, managing health supervision, and supporting participants with progressive cognitive impairments. Emphasis should be placed on their ability to deliver person-centered care and achieve positive impacts on both participants and their caregivers.

To support their track record, Applicants must include references from previous clients who can speak to the Provider's quality of service, professionalism, and overall performance. References should include contact information, a description of the services provided, and details about the scope of the project. These references will play a critical role in validating the applicant's capability to fulfill the requirements of the Adult Day Care Program.

Applicants are also encouraged to provide evidence of positive feedback from participants, caregivers, and stakeholders from prior projects. This could include client satisfaction surveys, letters of recommendation, or case studies illustrating successful outcomes.

Additionally, any relevant certifications, awards, or recognition for excellence in adult day care services or dementia care should be highlighted to further establish credibility and expertise. Evidence of strong past performance and satisfied clients will be essential in evaluating the applicant's suitability for this program.

Given the regulatory requirements that directly impact both the construction and operation of an Adult Day Care facility, applicants are strongly encouraged to demonstrate knowledge of, and experience with, Florida's Agency for Health Care Administration (AHCA) regulations. In Florida, Adult Day Care Centers must obtain both a license and a certificate of sanitation prior to beginning operations. Accordingly, applicants should provide evidence of past compliance with AHCA standards, including licensure experience and familiarity with applicable facility and programmatic requirements.

6.5. Financial Stability

Providers must demonstrate financial stability and the capacity to manage all operational and site improvement costs associated with the scope of services.

Applicants must provide clear and compelling evidence of financial stability to demonstrate their ability to successfully develop, implement, and sustain the Adult Day Care Program at the David I. Siegel Center.

Submissions should include detailed financial documentation that illustrates the applicant's capacity to manage operational expenses, fund necessary site improvements, and meet all regulatory and licensing requirements without financial constraints.

Applicants are required to submit audited financial statements for the past three years, including balance sheets, income statements, and cash flow statements, to provide a comprehensive view of their financial health. If audited statements are unavailable, independently reviewed or compiled statements may be submitted, accompanied by an explanation of their validity.

Applicants should provide a summary of their current financial position, highlighting key metrics such as liquidity, solvency, and debt-to-equity ratio. Evidence of access to sufficient working capital or credit lines to cover project costs, including unforeseen expenses or delays, must also be included. Applicants are encouraged to submit letters of credit or other guarantees from financial institutions as further evidence of their ability to finance the project.

The submission should outline the applicant's financial management practices, such as budgeting, cost controls, and risk mitigation strategies, to demonstrate their ability to effectively allocate resources and maintain fiscal responsibility. If applicable, applicants should include a record of successfully managing similar projects, with examples of how they ensured financial sustainability.

Applicants must also provide details on their ability to meet the long-term financial demands of operating the program including staff salaries, facility maintenance, and program resources. Submissions should reflect the applicant's understanding of the financial commitments required to maintain compliance with state and local regulations and to deliver high-quality services to participants. Evidence of financial stability will be a critical evaluation criterion, as it ensures the selected Provider can uphold its contractual obligations and deliver a sustainable and impactful program for Flagler County.

6.6. Cost

1. Participant Rate Structure

Propose the daily unit rates to be charged to participants or third-party insurers.

Service Category	Unit Measure	Proposed Base Rate
General Adult Day Care	Per Participant, Per Day	
Specialized Memory Care (Dementia)	Per Participant, Per Day	

2. Pro Forma Break-Even Matrix

Confirm the operational milestones necessary to reach self-sufficiency within the facility space.

- Minimum average daily census required to break even:_____ participants per day.
- Projected timeline to hit break-even census from contract start date: _____calendar days.

This scoring is to be done by Admin at time of evaluation scoring meeting.

7. Evaluation Phases

Each Proposal submittal shall be evaluated for conformance as responsive and responsible using the following criteria:

1. That all proposal documentation was submitted timely and in conformance with all requirements of the RFP.

2. That the following elements of Contractor's proposal meet or exceed the requirements of this RFP and cumulatively provide the service and benefits to the County deemed to be in the best interest of the public

3. Scoring (0-5) shall be assigned as follows. Each criteria will have a weight assigned to calculate total points awarded.

- 0= Did not submit
- 1 = Poor - Proposal is lacking or inadequate in most basic requirements, specifications, or provisions for the specific criteria.
- 2 = Below Average - Proposal meets many of the basic requirements, specifications or provisions of the specific item, but is lacking in some essential aspects for the specific criteria.
- 3 = Average - Proposal adequately meets the minimum requirements, specifications, or provisions of the specific item, and is generally capable of meeting the County's needs for the specific criteria.
- 4 = Above Average - Proposal more than adequately meets the minimum requirements, specifications, or provisions of the specific criteria, and exceeds those requirements in some aspects for the specific criteria.
- 5 = Excellent - Proposal exceeds minimum requirements, specifications, provisions in most aspects for the specific criteria.

4. Pricing elements shall be scored with lowest price/highest revenue receiving 5 points and calculating down from there based on percentage.

No.	Evaluation Criteria	Scoring Method	Weight (Points)

1.	**Provider's Qualifications and Experience** Provider's qualifications, experience and past Provider performance related to providing the type of services requested in this solicitation. The Provider will be required to demonstrate a comprehensive set of qualifications to ensure they are capable of delivering high-quality Adult Day Care Program. The Contractor must have a minimum of 5 years' experience in providing services to individuals diagnosed, showcasing a strong background in therapeutic care and health supervision. Specifically, the Provider must provide evidence of a well-established track record in operating adult day care programs or similar services. This includes a history of successfully designing and managing therapeutic programs that address the cognitive, physical, and emotional needs of individuals. The Provider must also demonstrate expertise in developing individualized care plans that cater to the unique needs of each participant, ensuring that all activities are tailored to enhance their quality of life and well-being. Provider must show evidence of its organizational capacity to manage the program effectively, including a clear administrative structure and support system to ensure smooth operations. The Provider should also provide proof of their ability to manage legal and financial responsibilities, particularly in terms of making site improvements to meet required codes for health, safety, and accessibility. The applicant will also need to demonstrate strong communication skills, including the ability to collaborate effectively with the City, caregivers, family members, and community partners. The Provider must be committed to providing regular updates on program progress, participant outcomes, and any challenges encountered, ensuring transparency and accountability throughout the project.	0-5 Points	20 *(20% of Total)*

2.	**Organizational Profile and Project Team Qualifications** Provider's approach to providing the requested scope of services. Provider must provide a qualified team of professionals with relevant certifications, such as Registered Nurses (RNs), Licensed Practical Nurses (LPNs), or Certified Nursing Assistants (CNAs), and staff members trained in Alzheimer's disease or related dementia care. These professionals should have experience in supervising participants, administering medication, assisting with activities of daily living, and addressing the medical and behavioral needs of individuals with Alzheimer's disease or related dementia. The operational staff provided by the applicant will play a critical role in ensuring the effective and safe operation of the Adult Day Care Program at the David I. Siegel Center. The staff must be qualified and capable of delivering high-quality care to individuals, as well as providing support to their caregivers. The staff will consist of a variety of professionals, including an administrator, nursing staff, direct care workers, and support staff, each of whom must meet specific educational and licensing requirements to comply with state and local regulations. The following areas must be addressed: 1. Identify the staff involved in the project, including identification of the bidder's project manager. The specific individuals who will work on this project must be identified, along with the nature and extent of their involvement. 2. Summarize their qualifications related to specific requirements of this project. 3. Resumes of professional staff must be included. 4. Job descriptions for all project staff must be included. Descriptions must include the hours the staff person works each week and the number of hours assigned to this program each week. 5. A Program Organizational Chart must be included. If you operate more than one program, also include an Agency Organizational Chart showing the line of authority. 6. The specific individuals who will work on this project must be identified, along with the nature and extent of their involvement. The qualifications of these individuals shall be presented (in resumes or other formats). If conducting this project will require hiring of one or more individuals who are not currently employed by the bidding	0-5 Points	20 *(20% of Total)*

	organization, applications shall provide detailed job descriptions, including required qualifications and experience. If subcontractors are to be used, the proposal shall also contain similar information regarding each subcontractor.		

3.	**Approach and Methodology** Professional experience and qualifications of key personnel that will be assigned to this project. The Provider must provide a comprehensive description of their organization's expertise in the area of adult day care services. This includes detailed information on the organization's experience in operating similar projects, demonstrating a proven track record in designing and implementing therapeutic care programs that address the unique needs of individuals to include individuals with Alzheimer's disease or related dementia. The Provider must outline their capacity to provide high-quality, person-centered care in a structured, supportive environment that promotes cognitive, emotional, and physical well-being. A key requirement is the inclusion of a summary of similar current and completed projects, to include any projects that focus on dementia or Alzheimer's care. The Provider should highlight any ongoing or past adult day care programs, therapeutic services for individuals with cognitive impairments, or similar health and wellness programs aimed at improving quality of life for elderly or vulnerable populations. For each project, the applicant should provide the following: project name, client or organization served, scope of services, the number of participants, and any measurable outcomes or successes achieved. This will help demonstrate the organization's ability to effectively manage and deliver services on a similar scale and complexity to the Adult Day Care Program at David I. Siegel Center. The Provider should also provide evidence of its capacity to manage both the operational and regulatory requirements of such programs, including compliance with state and local adult day care regulations. Examples of successful projects, particularly those that involved improvements to facilities, adherence to health and safety standards, or the integration of community-based care strategies, will strengthen the Provider's qualifications. The Provider should also demonstrate their ability to handle the financial and administrative aspects of the program, ensuring sustainability and efficient management. The organization's experience in overseeing program staffing, including qualified professionals trained in dementia care, as well as their approach to	0-5 Points	20 *(20% of Total)*

	caregiver support, will be important factors in evaluating their qualifications. The County seeks a Provider that can leverage this experience to create a program that meets both the immediate and long-term needs of participants, while collaborating effectively with County staff, caregivers, and other community stakeholders. Past performance references, along with detailed descriptions of similar projects, will be critical in assessing the Provider's qualifications and suitability for this important role.		

4.	**Past Performances and References** Provide at least three references, preferably from government entities, for projects with similar scope of services. Applicants must provide evidence of their past performance and include references to demonstrate their ability to successfully deliver high-quality adult day care services, to include services for individuals with dementia or Alzheimer's disease. Submissions should highlight the applicant's demonstrated success in managing similar programs, including specific examples of services provided, populations served, and outcomes achieved. Applicants should provide data or testimonials that showcase their expertise in developing and implementing therapeutic activities, managing health supervision, and supporting participants with progressive cognitive impairments. Emphasis should be placed on their ability to deliver person-centered care and achieve positive impacts on both participants and their caregivers. To support their track record, Applicants must include references from previous clients who can speak to the Provider's quality of service, professionalism, and overall performance. References should include contact information, a description of the services provided, and details about the scope of the project. These references will play a critical role in validating the applicant's capability to fulfill the requirements of the Adult Day Care Program. Applicants are also encouraged to provide evidence of positive feedback from participants, caregivers, and stakeholders from prior projects. This could include client satisfaction surveys, letters of recommendation, or case studies illustrating successful outcomes. Additionally, any relevant certifications, awards, or recognition for excellence in adult day care services or dementia care should be highlighted to further establish credibility and expertise. Evidence of strong past performance and satisfied clients will be essential in evaluating the applicant's suitability for this program. Given the regulatory requirements that directly impact both the construction and operation of an Adult Day Care facility, applicants are strongly encouraged to demonstrate knowledge of, and experience with, Florida's Agency for Health Care Administration (AHCA) regulations. In Florida, Adult Day Care Centers must obtain both a license and a certificate of sanitation prior to beginning	0-5 Points	10 *(10% of Total)*

	operations. Accordingly, applicants should provide evidence of past compliance with AHCA standards, including licensure experience and familiarity with applicable facility and programmatic requirements.		

5.	**Financial Stability** Providers must demonstrate financial stability and the capacity to manage all operational and site improvement costs associated with the scope of services. Applicants must provide clear and compelling evidence of financial stability to demonstrate their ability to successfully develop, implement, and sustain the Adult Day Care Program at the David I. Siegel Center. Submissions should include detailed financial documentation that illustrates the applicant's capacity to manage operational expenses, fund necessary site improvements, and meet all regulatory and licensing requirements without financial constraints. Applicants are required to submit audited financial statements for the past three years, including balance sheets, income statements, and cash flow statements, to provide a comprehensive view of their financial health. If audited statements are unavailable, independently reviewed or compiled statements may be submitted, accompanied by an explanation of their validity. Applicants should provide a summary of their current financial position, highlighting key metrics such as liquidity, solvency, and debt-to-equity ratio. Evidence of access to sufficient working capital or credit lines to cover project costs, including unforeseen expenses or delays, must also be included. Applicants are encouraged to submit letters of credit or other guarantees from financial institutions as further evidence of their ability to finance the project. The submission should outline the applicant's financial management practices, such as budgeting, cost controls, and risk mitigation strategies, to demonstrate their ability to effectively allocate resources and maintain fiscal responsibility. If applicable, applicants should include a record of successfully managing similar projects, with examples of how they ensured financial sustainability. Applicants must also provide details on their ability to meet the long-term financial demands of operating the program including staff salaries, facility maintenance, and program resources. Submissions should reflect the applicant's understanding of the financial commitments required to maintain compliance with state and local regulations and to deliver high-quality services to participants. Evidence of financial stability will be a critical evaluation criterion, as	0-5 Points	20 *(20% of Total)*

<table>
<tr><td></td><td>it ensures the selected Provider can uphold its contractual obligations and deliver a sustainable and impactful program for Flagler County.</td><td></td><td></td></tr>
<tr><td>6.</td><td>Cost

1. Participant Rate Structure

Propose the daily unit rates to be charged to participants or third-party insurers.

<table>
<tr><th>Service Category</th><th>Unit Measure</th><th>Proposed Base Rate</th></tr>
<tr><td>General Adult Day Care</td><td>Per Participant, Per Day</td><td></td></tr>
<tr><td>Specialized Memory Care (Dementia)</td><td>Per Participant, Per Day</td><td></td></tr>
</table>

2. Pro Forma Break-Even Matrix

Confirm the operational milestones necessary to reach self-sufficiency within the facility space.

• Minimum average daily census required to break even:_____ participants per day.
• Projected timeline to hit break-even census from contract start date: _____calendar days.

This scoring is to be done by Admin at time of evaluation scoring meeting.</td><td>0-5 Points</td><td>10
(10% of Total)</td></tr>
</table>

8. Vendor Questionnaire

1. Acknowledgements

*1.1. Acknowledgment**

By checking yes, the Respondent acknowledges the following:

- Information provided in the response is true and correct and that the submission of a response is final.
- The Respondent agrees to all terms and conditions contained in this solicitation and related exhibits.
- Respondent further agrees and acknowledges that no proprietary or confidential information has been submitted. By submitting this proposal or entering into this contract, Contractor/Respondent acknowledges that all documents submitted are public records and agrees that any records maintained, generated, received, or kept in connection with, or related to the performance of services or delivery of products provided under this proposal or contract are public records subject to the public records disclosure requirements of Florida Statutes sec. 119 et seq., and Article I, section 24 of the Florida Constitution.
- Responses may be withdrawn by the Respondent prior to the closing/offer date. Following the closing date, Respondent understands that a response may not be withdrawn.

☐ Yes
☐ No

*Response required

*1.2. Scope of Services Acknowledgement**

By checking yes, vendor acknowledges the above and/or included Scope of Services and will furnish said product and/or services according to the specifications or scope of services detailed within this Solicitation if awarded.

☐ Yes
☐ No

*Response required

*1.3. By checking yes, the vendor agrees to comply with the E-Verify requirements as described in this section.**

Compliance with E-Verify Federal Requirements

The Contractor shall utilize the U.S. Department of Homeland Security's E-Verify system to verify the employment eligibility of all new employees hired by the Contractor / Consultant on or after the effective date of this Agreement and thereafter during the remaining term of the Agreement, including Subcontractors. Any subcontract entered into by Contractor with any Subcontractor performing work under this contract shall

include the following language: “The Subcontractor shall utilize the U.S. Department of Homeland Security’s E-Verify system to verify the employment eligibility of all new employees hired by the Contractor on or after the effective date of this Agreement and thereafter during the remaining term of the Agreement.” The Contractor covenants and agrees that if it is found in violation of this section or the Executive Order, such violation shall be a material breach of this Agreement and Contractor shall indemnify, defend and hold harmless the County from any fines or penalties levied by a government agency, including the loss or repayment of grant funds by the County.

☐ Yes
☐ No

*Response required

*1.4. Registration on Sam.gov**

For any federally funded project, respondent agrees to register on SAM.gov if awarded a contract under this solicitation.

☐ Yes
☐ No

*Response required

When equals "Yes"

*1.4.1. Please provide your UEI#**

*Response required

*1.5. Registration on Sunbiz.org**

☐ Yes
☐ No

*Response required

When equals "Yes"

*1.5.1. Please provide your Sunbiz.org Document Number**

*Response required

When equals "Yes"

*1.5.2. Please upload your Sunbiz.org certificate.**

*Response required

*1.6. Insurance Acknowledgement**

By checking yes, Respondent agrees to the insurance requirements as detailed in the Required Types and Limits of Insurance Chart and the Required Types of Insurance; Insurance Requirements; and Proof of Insurance sub-sections in "General Terms and Conditions".

☐ Yes
☐ No

*Response required

*1.7. Drug-Free Workplace**

Please download the below documents, complete, and upload.

- DRUG_FREE_WORKPLACE.pdf

*Response required

*1.8. Name and Title of Authorized Agent of the Respondent**

Respondent acknowledges that the name and title of the signatory (the "Authorized Signatory"), as completed below, is authorized to execute contracts/agreements with Flagler County, and any affixed electronic or conformed signature of the Authorized Signatory shall be the act of and attributable to the Authorized Signatory. By signing this Agreement electronically, the Authorized Signatory does thereby adopt the electronic or conformed signature as his or her own and designates a copy of same for use as an official record by Flagler County.

If the below-named individual is not an authorized agent of the firm, as listed with the Florida Division of Corporations (Sunbiz), a Memorandum of Authority shall be uploaded giving that individual authorization to commit the firm to a contract.

Please provide the Complete Name and Title which shall indicate acknowledgment.

*Response required

*1.9. Conflict of Interest**

The award of this Solicitation is subject to Chapter 112, Florida Statutes. All respondents must disclose with their response the name of any officer, director, or agent who is also an employee of Flagler County. Further, all respondents must disclose the name of any Flagler County employee who owns, directly or indirectly, an interest of the Respondent's/Supplier's firm or any of its subsidiaries associated with this project. I certify that this proposal is made without prior understanding, agreement or connection with any corporation, firm or person submitting a proposal for the same services, and is in all respects fair and without collusion or fraud.

Respondent shall select 'No' if a conflict of interest as defined in this question does NOT exist. Please select 'Yes' if a conflict of interest as defined in this question DOES exist and shall be further described in the explanation below.

☐ Yes
☐ No

*Response required

When equals "Yes"

*1.9.1. Enter explanation of the conflict of interest as indicated above. **

*Response required

*1.10. Do you or any owner(s), principal(s), or officer(s) of your firm currently serve on any Flagler County board(s) or committee(s)?**

Please indicate response.

☐ Yes
☐ No

*Response required

When equals "Yes"

*1.10.1. If you indicated YES to Flagler County board/committee question above...**

Please list the individual's full name(s) and the board(s) and/or committee(s) on which they serve.

*Response required

2. Revisions, Addenda, Questions & Answers

All answers to questions of substance will be publicly published using the Question & Answer feature.

Participants are required to review all revisions and answers to questions published. Revisions within the Solicitation as well as responses posted through the 'Question & Answer' feature are authoritative and shall be considered an addendum to the Solicitation. All information in this Solicitation, including information provided through the 'Question & Answer' feature are incorporated into the Solicitation or any Contract resulting from this Solicitation.

*2.1. Addenda/Questions Acknowledgement**

By selecting YES below, participants are confirming that they have reviewed revisions and all answers to questions published and any addenda up until the Solicitation closing date and have given consideration to all information in preparing the response to this Solicitation. Selecting YES will serve as confirmation of acknowledgement.

☐ Yes
☐ No

*Response required

3. Public Entity Crime

*3.1. Public Entity Crime Acknowledgement**

Public Entity Crimes - Pursuant to Section 287.133(12)(a) of the Florida Statutes, a person or affiliate who has been placed on the convicted vendor list following a conviction for a public entity crime may not submit a Submittal Package (Bid Response) on a contract to provide any goods or services to a public entity, may not

submit a bond on a contract with a public entity for the construction or repair of a public building or public work, may not submit Submittal Package (Bid Response) on leases of real property to a public entity may not be awarded or perform work as a contractor, supplier, subcontractor, or consultant under a contract with any public entity, and may not transact business with any public entity in excess of the threshold amount provided in Section 287.017 for Category Two ($25,000) for a period of 36 months from the date of being placed on the convicted vendor list. Respondent should read carefully all provisions of 287.133 and 287.134, Florida Statutes (2005).

By selecting 'Yes', the Respondent represents and warrants that the submission of its response/proposal does not violate Section 287.133, Florida Statutes (2005), nor Section 287.134, Florida Statutes (2005) or their successor. In addition to the foregoing, the Respondent represents and warrants that Respondent, Respondent's subcontractors and Respondent's implementer, if any, is not under investigation for violation of such statutes.

☐ Yes
☐ No

*Response required

4. Certification Regarding Debarment, Suspension, Ineligibility and Voluntary Exclusion

*4.1. Acknowledgment Regarding Debarment, Suspension, Ineligibility and Voluntary Exclusion**

By selecting 'Yes' below, the Respondent certifies to the best of its knowledge and belief, that the firm and any subcontractor/supplier in accordance with a response to this solicitation:

- are not presently debarred, suspended, proposed for debarment, declared ineligible, or voluntarily excluded from covered transactions by any Federal department or agency
- have not within a three-year period preceding this bid proposal been convicted of or had a civil judgment rendered against them for commission of fraud or a criminal offense in connection with obtaining, attempting to obtain, or performing a public (Federal, State, or local) transaction or contract under a public transaction; violation of Federal or State antitrust statutes or commission of embezzlement, theft, forgery, bribery, falsification or destruction of records, making false statements, or receiving stolen property.
- are not presently indicted for or otherwise criminally or civilly charged by a government entity (Federal, State, or local) with commission of any of the offenses enumerated in the previous paragraph of this certification.
- have not within a three (3) year period preceding this bid proposal had one or more public transactions (Federal, State, or local) terminated for cause or default.

☐ Yes
☐ No

*Response required

When equals "No"

4.1.1. Enter explanation of the 'No' response to the Certification Regarding Debarment, Suspension, Ineligibility and Voluntary Exclusion.

5. Scrutinized Companies Certification

Per State of Florida Statute s. 287.135(5) Suppliers (companies) must acknowledge and agree to the 'Certification Regarding Prohibition Against Contracting with Scrutinized Companies' paragraph listed below. Respondents shall agree by marking the option below. Respondents neglecting to respond may be disqualified from consideration of award and deemed non-responsive.

I hereby certify that neither the responding entity, nor any of its wholly owned subsidiaries, majority-owned subsidiaries, parent companies, or affiliates of such entities or business associations, that exists for the purpose of making profit have been placed on the Scrutinized Companies That Boycott Israel List created pursuant to s. 215.4725 of the Florida Statutes, or are engaged in a boycott of Israel.

In addition, if this Solicitation is for a contract for goods or services where the total contract value is one million dollars ($1,000,000) or more, I hereby certify that neither the responding entity, nor any of its wholly owned subsidiaries, majority- owned subsidiaries, parent companies, or affiliates of such entities or business associations, that exists for the purpose of making profit are on the Scrutinized Companies with Activities in Sudan List or the Scrutinized Companies with Activities in the Iran Petroleum Energy Sector List, created pursuant to s. 215.473 of the Florida Statutes, or are engaged in business operations in Cuba or Syria as defined in said statute.

I understand and agree that the County may immediately terminate any contract resulting from this Solicitation upon written notice if the responding entity (or any of those related entities of respondent as defined above by Florida law) are found to have submitted a false certification or any of the following occur with respect to the company or a related entity: (i) it has been placed on the Scrutinized Companies that Boycott Israel List, or is engaged in a boycott of Israel, or (ii) for any contract for goods or services of one million dollars ($1,000,000) or more, it has been placed on the Scrutinized Companies with Activities in Sudan List or the Scrutinized Companies with Activities in the Iran Petroleum Energy Sector List, or it is found to have been engaged in business operations in Cuba or Syria.

*5.1. By selecting 'Yes', the respondent acknowledges and agrees to the 'Certification Regarding Prohibition Against Contracting with Scrutinized Companies.' **

☐ Yes

☐ No

*Response required

6. Forms/Documentation

*6.1. Proposal Form**

Please download the attached form, complete, and upload the completed form.

- Proposal_Form_11.18.24.pdf

*Response required

6.2. Memorandum of Authority

If the Authorized Signatory identified in Section 1.11 above is not an authorized agent of the firm, as listed with the Florida Division of Corporations (Sunbiz), a memorandum of authority, signed by an authorized agent, shall be uploaded in this section giving that individual (Authorized Signatory) the authority to commit the firm to a contract.

*6.3. W-9 **

Please attach current W-9 Form

*Response required

*6.4. Proof of Insurance **

Please provide Proof of Insurance - evidence of required insurance coverage or proof of insurability in the amounts indicated. If available, a properly completed ACORD Form is preferable. Upon award, final forms must contain the correct solicitation and/or project number and Flagler County contact person.

Firms that have owner/operators that have filed a "Notice of Election to be Exempt" shall submit a copy with the response

*Response required

6.5. Hold Harmless Agreement

Please download the below document, complete, and upload.

Only upload if applicable in accordance with Florida Law.

- Flagler_Hold_Harmless_Agree...

*6.6. Professional Certification/Licenses**

Respondent and their Subconsultants/Subcontractors shall have a current professional license from the appropriate governing board to practice in the State of Florida at the time of its submittal. Respondent and their Subconsultants/Subcontractors shall submit with their submittal, copies of their professional license.

Licenses shall remain current for the entire term of the Contract resulting from this solicitation.

*Response required

*6.7. Prohibition Against Contingent Fees**

Respondent shall properly complete, notarize and upload the attached disclosure statement certifying that he or she has not employed or retained any company or person, other than a bona fide employee working solely for the respondent to solicit or secure this contract and that he or she has not paid or agreed to pay any person, company, corporation, individual, or firm, other than a bona fide employee working solely for the respondent any fee, commission, percentage, gift, or other consideration contingent upon or resulting from award or making of this contract.

- Prohibition_Against_Contige...

*Response required

*6.8. Human Trafficking Attestation Pursuant to Section 787.06, Florida Statutes**

A duly authorized officer or representative of the Respondent (non-governmental entity) shall complete the included Flagler Human Trafficking Attestation Form in compliance with Section 787.06(13), Florida Statutes, (2024).

Download the attached form, complete, and upload completed form.

- Flagler_Human_Trafficking_A...

*Response required

*6.9. Financial Statement **

All Respondents shall be prepared to supply a financial statement upon request, preferably a certified audit of the last available fiscal year.

☐ Please confirm

*Response required

7. Proposal Information

Proposals shall be clear, concise, indexed by subject and properly submitted per the requirements. Documents shall be uploaded by the Respondent to the appropriate section.

Failure to provide the required information may result in the proposal not being considered.

*7.1. Documentation Submittal**

Only provide documentation for the required item being asked under each section. Posting the whole proposal under each requirement will have you marked as non responsive and your bid will not be considered.

☐ Yes
☐ No

*Response required

*7.2. Submittal Letter / Firm Profile **

Submittal Letter signed by an authorized agent of the firm.

A brief profile of the firm, including:

A. A brief history of the business;

B. Organizational structure of business;

C. Designation of the legal entity by which the business operates (i.e., sole proprietorship, partnership, limited liability partnership, corporation, limited liability corporation, etc.) including documentation from the appropriate state's agency confirming firm's legal entity type. For non-Florida businesses, submit documentation from the state in which the business was formed and documentation from the State of Florida providing authorization to perform business in the state of Florida;

D. A Florida Department of State, Division of Corporations' Sunbiz report available at www.sunbiz.org; If firm is not currently registered to do business within the State of Florida (Sunbiz), proof of registration shall be submitted prior to award.

E. Ownership interests;

F. Active business venues (counties, states, etc.);

G. Present status and projected direction of business;

H. The overall qualifications of the business to provide the services requested;

I. The qualifications of the firm's employees who will work on the Contract;

J. Respondent shall also list any lawsuits in which their team (firm & sub consultants) has been involved in relative to company contracts or other company business over the last five (5) years. The respondent shall also list any work their team failed to complete in accordance with any contract in the last five (5) years and describe details regarding the non-performance, including listing any officer or partner of their team who in the last five (5) years failed to complete a contract handled in his/her name.

*Response required

*7.3. Firm/Employee Qualifications **

Qualifications of the firm and the employees that will be assigned to the County.

Key personnel inclusive of resumes, licenses, business venues, etc.

*Response required

*7.4. Similar Projects and References **

The information provided in this section, must be current and the County must be able to contact references for verification as part of the evaluation process.

Unless specifically asked by the County, Flagler County shall not be listed as a reference. The respondent shall provide examples of similar projects which best illustrates the Respondent's qualification for the scope of services.

The Respondent shall provide examples of similar projects which best illustrates the proposed team's qualification for the scope of services. Respondent shall state the project title; location; owner name, address, and telephone number; years completed; project cost; brief description of project and relevance to this RSQ.

Provide a client reference for each of the representative projects including project name, client name, address, contact name and phone number and E-mail address. It is the firm's responsibility to ensure E-mail addresses provided are current and accurate. Use the attached Reference Form.

Please download the below document, complete, and upload.

- References_Form_11.18.24.pdf

*Response required

*7.5. Project Approach**

Overall project methodology/approach to support the needs and objectives of the project; including method for quality control.

*Response required

*7.6. Price Proposal Form**

Please download the below documents, complete, and upload.

- PRICE_PROPOSAL_FORM.pdf

*Response required

*7.7. ACHA Form 31-00-0009**

Please download the below documents, complete, and upload.

- ACHA_Form_31-00-0009.xls

*Response required

9. Definitions

As used in this Solicitation, the following terms shall have the meanings set forth below:

- **Construction Services**: Means all labor, services, and materials provided in connection with the construction, alteration, repair, demolition, reconstruction, or any other improvements to real property. The term "construction services" does not include Contracts or work performed for the Department of Transportation.
- **Consultant**: The person with education and/or experience which uniquely qualifies him or her to perform a specialized service for the County.
- **Consultant's Services**: Those services within the scope of work of this solicitation that are in an advisory nature to support policy development, decision-making, administration, or management of the government; normally provided by persons and/or organizations considered to have prerequisite knowledge or special abilities not generally available in the government.
- **Contract**: The document resulting from this solicitation between the County and the awarded Respondent, including this RFP, and the awarded Respondent's response along with any written addenda and other written documents, which are expressly incorporated by reference.
- **Contractor**: That person or entity, including employees, servants, partners, principals, agents and assignees of the person or entity that has submitted a Bid or proposal for the purpose of obtaining business with the County to provide the product and/or services set forth herein.
- **Contract Administrator**: The Procurement and Contract Services Manager or designee shall serve as Contract Administrator. The Contract Administrator shall be responsible for addressing any concerns within the scope of the Contract. Any changes to the resulting Contract shall be done in writing and authorized by the Procurement and Contract Services Manager.
- **County**: Shall mean the Flagler County Board of County Commissioners (a body corporate and politic and a subdivision of the State of Florida).
- **County's Project Manager(s)**: The Project Manager(s) have responsibility for the day-to-day administration of the resulting Agreement for the County and will be designated prior to award of the resulting Master Agreement or Purchase Order.
- **Day**: The word "day" means each calendar day or accumulation of calendar days.
- **Director**: The Procurement and Contract Services Manager for Flagler County Board of County Commissioners, Florida.

- **Person or Persons**: An individual, firm, partnership, corporation, association, executor, administrator, trustee, or other legal entity, whether singular or plural, masculine or feminine, as the context may require.
- **Proposal**: The document submitted by the Consultant in response to a formal solicitation used to determine if the Consultant is highly qualified.
- **Proposer**: See Respondent.
- **Protest**: See process at Resources Flagler County under Procurement Manual.
- **Respondent**: That person or entity, including employees, servants, partners, principals, agents and assignees of the person or entity that submits a proposal for the purpose of obtaining a Contract with the County for the provision of the services requested in the RFP.
- **Respondent's Project Manager**: The Project Manager has responsibility for administering this Contract for the Respondent and will be designated prior to execution of the Contract.
- **Task Assignment**: Specific, detailed services or work placed against an awarded and established continuing services Contract memorialized as an Amendment to this Contract by the parties prior to the commencement of such Work or Services by the Consultant.

Vendor *Click row to open scorecard*	**Provider's Qualif** 0-5 Points 20 Points (20%)	**Organizational P** 0-5 Points 20 Points (20%)	**Approach and M** 0-5 Points 20 Points (20%)	**Past Performanc** 0-5 Points 10 Points (10%)	**Financial Stabilit** 0-5 Points 20 Points (20%)	**Cost** 0-5 Points 10 Points (10%)	**Total Score (Max Score 100)**
Calvin’s Care L…	1.67	2.33	2.67	2	1.33	3	**42**
Mishpakha Inc	3	2.33	3.33	2.67	3	4	**60**
Therapeutic As…	3.67	2.67	3.33	3.67	3	5	**68**

County of Flagler
Financial Services
E. John Brower MBA, CGFO, CPM, Director
1769 East Moody Boulevard | Building 2, Bunnell, FL 32110
(386) 313-4008

NOTICE OF INTENT TO AWARD

RFP No. 26-RFP-022

Operation and Program Administration of the Flagler County Adult Day Care at the David I. Siegel Center

RESPONSE DEADLINE: August 24, 2026 at 2:00 pm

Thursday, September 3, 2026

Thank you for submitting a bid in response to 26-RFP-022 for Operation and Program Administration of the Flagler County Adult Day Care at the David I. Siegel Center. Flagler County has evaluated all submittals received in response to solicitation and intends to award a contract to Therapeutic Assisted Living Corp.

Protest Process

Notification

The Office of Procurement and Contracts shall post all recommendations of award available for review by the public on the Flagler County website. Vendors who submit a solicitation will be notified by e-mail.

Notice of Intent to File a Protest

1. A respondent adversely affected by an intended decision or action with respect to the initial award on a solicitation shall file a written notice of intent to file a protest. That notice of intent to file a protest must be filed with the Procurement and Contract Services Manager or his/her designee no later than four o'clock (4:00) p.m. on the third (3rd) business day following the date of the notice of the recommendation of award.

2. In addition, a protest bond in the form of a U.S. Postal Service money order or by a certified cashier's check in an amount equal to one percent (1%) of the value of the solicitation, but in no case less than five hundred dollars ($500), nor greater than five thousand dollars ($5,000), payable to the Flagler County Board of County Commissioners must be delivered with the written notice of intent to file a protest. Failure to post such bond shall result in the Protest being dismissed by the Procurement and Contract Services Manager or his/her designee.

3. The notice of intent to file a protest must:

a. Identify the action being protested.

b. Clearly state the basis of the protest, and

c. Clearly state that its purpose is to serve as the notice of intent to file a protest.

4. Failure to provide the proper notice and/or failure to provide the required protest bond shall constitute a waiver of the right to seek any remedy provided under the protest procedure. Once again thank you for participating in this solicitation and for your interest in doing business with Flagler County.

Further information on our protest policy can be found at https://www.flaglercounty.gov/Government/Departments/Financial-Services/Office-of-Procurement-and-Contracts-OPC/Resources, under Procurement Manual.

Sincerely,

Jessica Martin
Senior Procurement Analyst
Office of Procurement and Contracts
Flagler County Board of County Commissioners

County of Flagler
Financial Services
E. John Brower MBA, CGFO, CPM, Director
1769 East Moody Boulevard | Building 2, Bunnell, FL 32110

[THERAPEUTIC ASSISTED LIVING CORP] RESPONSE DOCUMENT REPORT

RFP No. 26-RFP-022

Operation and Program Administration of the Flagler County Adult Day Care at the David I. Siegel Center

RESPONSE DEADLINE: August 24, 2026 at 2:00 pm

Report Generated: Tuesday, August 25, 2026

Therapeutic Assisted Living Corp Response

CONTACT INFORMATION

Company:
Therapeutic Assisted Living Corp

Email:
therapeuticalf@gmail.com

Contact:
Latasha Rowell

Address:
25 Lyndenhurst Ln
Palm Coast, FL 32137-9521

Phone:
(904) 501-8991

Website:
www.therapeuticassistedliving.org

Submission Date:
Aug 24, 2026 12:10 PM (Eastern Time - New York)

ADDENDA CONFIRMATION

Addendum #1
Confirmed Aug 19, 2026 6:42 AM by Latasha Rowell

Addendum #2
Confirmed Aug 19, 2026 6:42 AM by Latasha Rowell

QUESTIONNAIRE

1. Acknowledgements

ACKNOWLEDGMENT*
By checking yes, the Respondent acknowledges the following:

- Information provided in the response is true and correct and that the submission of a response is final.
- The Respondent agrees to all terms and conditions contained in this solicitation and related exhibits.
- Respondent further agrees and acknowledges that no proprietary or confidential information has been submitted. By submitting this proposal or entering into this contract, Contractor/Respondent acknowledges that all documents submitted are public records and agrees that any records maintained, generated, received, or kept in connection with, or related to the performance of services or delivery of products provided under this proposal or contract are public records subject to the public records disclosure requirements of Florida Statutes sec. 119 et seq., and Article I, section 24 of the Florida Constitution.
- Responses may be withdrawn by the Respondent prior to the closing/offer date. Following the closing date, Respondent understands that a response may not be withdrawn.

Yes

SCOPE OF SERVICES ACKNOWLEDGEMENT*

By checking yes, vendor acknowledges the above and/or included Scope of Services and will furnish said product and/or services according to the specifications or scope of services detailed within this Solicitation if awarded.

Yes

BY CHECKING YES, THE VENDOR AGREES TO COMPLY WITH THE E-VERIFY REQUIREMENTS AS DESCRIBED IN THIS SECTION.*
Compliance with E-Verify Federal Requirements

The Contractor shall utilize the U.S. Department of Homeland Security's E-Verify system to verify the employment eligibility of all new employees hired by the Contractor / Consultant on or after the effective date of this Agreement and thereafter during the remaining term of the Agreement, including Subcontractors. Any subcontract entered into by Contractor with any Subcontractor performing work under this contract shall include the following language: "The Subcontractor shall utilize the U.S. Department of Homeland Security's E-Verify system to verify the employment eligibility of all new employees hired by the Contractor on or after the effective date of this Agreement and thereafter during the remaining term of the Agreement." The Contractor covenants and agrees that if it is found in violation of this section or the Executive Order, such violation shall be a material breach of this Agreement and Contractor shall indemnify, defend and hold harmless the County from any fines or penalties levied by a government agency, including the loss or repayment of grant funds by the County.

Yes

REGISTRATION ON SAM.GOV*
For any federally funded project, respondent agrees to register on SAM.gov if awarded a contract under this solicitation.

Yes

PLEASE PROVIDE YOUR UEI#*
S9X8KGANC2H4

REGISTRATION ON SUNBIZ.ORG*
Yes

PLEASE PROVIDE YOUR SUNBIZ.ORG DOCUMENT NUMBER*
P19000090814

PLEASE UPLOAD YOUR SUNBIZ.ORG CERTIFICATE.*
SUNBIZ_DEP_OF_CORP_.pdf

2026_ANNUAL_REPORT_SUNBIZ.pdf

INSURANCE ACKNOWLEDGEMENT*
By checking yes, Respondent agrees to the insurance requirements as detailed in the Required Types and Limits of Insurance Chart and the Required Types of Insurance; Insurance Requirements; and Proof of Insurance sub-sections in "General Terms and Conditions".

Yes

DRUG-FREE WORKPLACE*
Please download the below documents, complete, and upload.

- DRUG_FREE_WORKPLACE.pdf

Drug_free_workplace.pdf

NAME AND TITLE OF AUTHORIZED AGENT OF THE RESPONDENT*
Respondent acknowledges that the name and title of the signatory (the “Authorized Signatory”), as completed below, is authorized to execute contracts/agreements with Flagler County, and any affixed electronic or conformed signature of the Authorized Signatory shall be the act of and attributable to the Authorized Signatory. By signing this Agreement electronically, the Authorized Signatory does thereby adopt the electronic or conformed signature as his or her own and designates a copy of same for use as an official record by Flagler County.

If the below-named individual is not an authorized agent of the firm, as listed with the Florida Division of Corporations (Sunbiz), a Memorandum of Authority shall be uploaded giving that individual authorization to commit the firm to a contract.

Please provide the Complete Name and Title which shall indicate acknowledgment.

Latasha Rowell/President

CONFLICT OF INTEREST*
The award of this Solicitation is subject to Chapter 112, Florida Statutes. All respondents must disclose with their response the name of any officer, director, or agent who is also an employee of Flagler County. Further, all respondents must disclose the name of any Flagler County employee who owns, directly or indirectly, an interest of the Respondent's/Supplier's firm or any of its subsidiaries associated with this project. I certify that this proposal is made without prior understanding, agreement or connection with any corporation, firm or person submitting a proposal for the same services, and is in all respects fair and without collusion or fraud.

Respondent shall select 'No' if a conflict of interest as defined in this question does NOT exist. Please select 'Yes' if a conflict of interest as defined in this question DOES exist and shall be further described in the explanation below.

No

DO YOU OR ANY OWNER(S), PRINCIPAL(S), OR OFFICER(S) OF YOUR FIRM CURRENTLY SERVE ON ANY FLAGLER COUNTY BOARD(S) OR COMMITTEE(S)?*
Please indicate response.

No

2. Revisions, Addenda, Questions & Answers

All answers to questions of substance will be publicly published using the Question & Answer feature.

Participants are required to review all revisions and answers to questions published. Revisions within the Solicitation as well as responses posted through the 'Question & Answer' feature are authoritative and shall be considered an addendum to the Solicitation.

All information in this Solicitation, including information provided through the 'Question & Answer' feature are incorporated into the Solicitation or any Contract resulting from this Solicitation.

ADDENDA/QUESTIONS ACKNOWLEDGEMENT*
By selecting YES below, participants are confirming that they have reviewed revisions and all answers to questions published and any addenda up until the Solicitation closing date and have given consideration to all information in preparing the response to this Solicitation. Selecting YES will serve as confirmation of acknowledgement.

Yes

3. Public Entity Crime

PUBLIC ENTITY CRIME ACKNOWLEDGEMENT*
Public Entity Crimes - Pursuant to Section 287.133(12)(a) of the Florida Statutes, a person or affiliate who has been placed on the convicted vendor list following a conviction for a public entity crime may not submit a Submittal Package (Bid Response) on a contract to provide any goods or services to a public entity, may not submit a bond on a contract with a public entity for the construction or repair of a public building or public work, may not submit Submittal Package (Bid Response) on leases of real property to a public entity may not be awarded or perform work as a contractor, supplier, subcontractor, or consultant under a contract with any public entity, and may not transact business with any public entity in excess of the threshold amount provided in Section 287.017 for Category Two ($25,000) for a period of 36 months from the date of being placed on the convicted vendor list. Respondent should read carefully all provisions of 287.133 and 287.134, Florida Statutes (2005).

By selecting 'Yes', the Respondent represents and warrants that the submission of its response/proposal does not violate Section 287.133, Florida Statutes (2005), nor Section 287.134, Florida Statutes (2005) or their successor. In addition to the foregoing, the Respondent represents and warrants that Respondent, Respondent’s subcontractors and Respondent’s implementer, if any, is not under investigation for violation of such statutes.

Yes

4. Certification Regarding Debarment, Suspension, Ineligibility and Voluntary Exclusion

ACKNOWLEDGMENT REGARDING DEBARMENT, SUSPENSION, INELIGIBILITY AND VOLUNTARY EXCLUSION*
By selecting 'Yes' below, the Respondent certifies to the best of its knowledge and belief, that the firm and any subcontractor/supplier in accordance with a response to this solicitation:

- are not presently debarred, suspended, proposed for debarment, declared ineligible, or voluntarily excluded from covered transactions by any Federal department or agency
- have not within a three-year period preceding this bid proposal been convicted of or had a civil judgment rendered against them for commission of fraud or a criminal offense in connection with obtaining, attempting to obtain, or performing a public (Federal, State, or local) transaction or contract under a public transaction; violation of Federal or State antitrust statutes or commission of embezzlement, theft, forgery, bribery, falsification or destruction of records, making false statements, or receiving stolen property.
- are not presently indicted for or otherwise criminally or civilly charged by a government entity (Federal, State, or local) with commission of any of the offenses enumerated in the previous paragraph of this certification.
- have not within a three (3) year period preceding this bid proposal had one or more public transactions (Federal, State, or local) terminated for cause or default.

Yes

5. Scrutinized Companies Certification

Per State of Florida Statute s. 287.135(5) Suppliers (companies) must acknowledge and agree to the 'Certification Regarding Prohibition Against Contracting with Scrutinized Companies' paragraph listed below. Respondents shall agree by marking the option below. Respondents neglecting to respond may be disqualified from consideration of award and deemed non-responsive.

I hereby certify that neither the responding entity, nor any of its wholly owned subsidiaries, majority-owned subsidiaries, parent companies, or affiliates of such entities or business associations, that exists for the purpose of making profit have been placed on the Scrutinized Companies That Boycott Israel List created pursuant to s. 215.4725 of the Florida Statutes, or are engaged in a boycott of Israel.

In addition, if this Solicitation is for a contract for goods or services where the total contract value is one million dollars ($1,000,000) or more, I hereby certify that neither the responding entity, nor any of its wholly owned subsidiaries, majority- owned subsidiaries, parent companies, or affiliates of such entities or business associations, that exists for the purpose of making profit are on the Scrutinized Companies with Activities in Sudan List or the Scrutinized Companies with Activities in the Iran Petroleum Energy Sector List, created pursuant to s. 215.473 of the Florida Statutes, or are engaged in business operations in Cuba or Syria as defined in said statute.

I understand and agree that the County may immediately terminate any contract resulting from this Solicitation upon written notice if the responding entity (or any of those related entities of respondent as defined above by Florida law) are found to have submitted a false certification or any of the following occur with respect to the company or a related entity: (i) it has been placed on the Scrutinized Companies that Boycott Israel List, or is engaged in a boycott of Israel, or (ii) for any contract for goods or services of one million dollars ($1,000,000) or more, it has been placed on the Scrutinized Companies with Activities in Sudan List or the Scrutinized Companies with Activities in the Iran Petroleum Energy Sector List, or it is found to have been engaged in business operations in Cuba or Syria.

BY SELECTING 'YES', THE RESPONDENT ACKNOWLEDGES AND AGREES TO THE 'CERTIFICATION REGARDING PROHIBITION AGAINST CONTRACTING WITH SCRUTINIZED COMPANIES.' *
Yes

6. Forms/Documentation

PROPOSAL FORM*
Please download the attached form, complete, and upload the completed form.

- Proposal_Form_11.18.24.pdf

Proposal_form_2.pdf

MEMORANDUM OF AUTHORITY

If the Authorized Signatory identified in Section 1.11 above is not an authorized agent of the firm, as listed with the Florida Division of Corporations (Sunbiz), a memorandum of authority, signed by an authorized agent, shall be uploaded in this section giving that individual (Authorized Signatory) the authority to commit the firm to a contract.

No response submitted

W-9 *
Please attach current W-9 Form

Therapeutic_ALF_W9.pdf

PROOF OF INSURANCE *
Please provide Proof of Insurance - evidence of required insurance coverage or proof of insurability in the amounts indicated. If available, a properly completed ACORD Form is preferable. Upon award, final forms must contain the correct solicitation and/or project number and Flagler County contact person.

Firms that have owner/operators that have filed a "Notice of Election to be Exempt" shall submit a copy with the response

Insurance_Plastridge_Annual_.pdf

HOLD HARMLESS AGREEMENT
Please download the below document, complete, and upload.

Only upload if applicable in accordance with Florida Law.

- Flagler_Hold_Harmless_Agree...

Hold_Harmless_Agreement_.pdf

PROFESSIONAL CERTIFICATION/LICENSES*
Respondent and their Subconsultants/Subcontractors shall have a current professional license from the appropriate governing board to practice in the State of Florida at the time of its submittal. Respondent and their Subconsultants/Subcontractors shall submit with their submittal, copies of their professional license.

Licenses shall remain current for the entire term of the Contract resulting from this solicitation.

Therapeutic_Assisted_Living_Corp_-_11969778_-_LIC_LTR_-_9.pdf
Latasha_Rowell_Administrative_Cert_2.pdf
Latasha_Rowell's_Physical_Therapist_Assisted_License_.png

PROHIBITION AGAINST CONTINGENT FEES*
Respondent shall properly complete, notarize and upload the attached disclosure statement certifying that he or she has not employed or retained any company or person, other than a bona fide employee working solely for the respondent to solicit or secure this contract and that he or she has not paid or agreed to pay any person, company, corporation, individual, or firm, other than a bona fide employee working solely for the respondent any fee, commission, percentage, gift, or other consideration contingent upon or resulting from award or making of this contract.

- Prohibition_Against_Contige...

Prohibition_against_contingent_fees.pdf

HUMAN TRAFFICKING ATTESTATION PURSUANT TO SECTION 787.06, FLORIDA STATUTES*
A duly authorized officer or representative of the Respondent (non-governmental entity) shall complete the included Flagler Human Trafficking Attestation Form in compliance with Section 787.06(13), Florida Statutes, (2024).

Download the attached form, complete, and upload completed form.

- Flagler_Human_Trafficking_A...

Human_Trafficing_2.pdf

FINANCIAL STATEMENT *
All Respondents shall be prepared to supply a financial statement upon request, preferably a certified audit of the last available fiscal year.

Confirmed

7. Proposal Information

Proposals shall be clear, concise, indexed by subject and properly submitted per the requirements. Documents shall be uploaded by the Respondent to the appropriate section.

Failure to provide the required information may result in the proposal not being considered.

DOCUMENTATION SUBMITTAL*

Only provide documentation for the required item being asked under each section. Posting the whole proposal under each requirement will have you marked as non responsive and your bid will not be considered.

Yes

SUBMITTAL LETTER / FIRM PROFILE *

Submittal Letter signed by an authorized agent of the firm.

A brief profile of the firm, including:

A. A brief history of the business;

B. Organizational structure of business;

C. Designation of the legal entity by which the business operates (i.e., sole proprietorship, partnership, limited liability partnership, corporation, limited liability corporation, etc.) including documentation from the appropriate state's agency confirming firm's legal entity type. For non-Florida businesses, submit documentation from the state in which the business was formed and documentation from the State of Florida providing authorization to perform business in the state of Florida;

D. A Florida Department of State, Division of Corporations' Sunbiz report available at www.sunbiz.org; If firm is not currently registered to do business within the State of Florida (Sunbiz), proof of registration shall be submitted prior to award.

E. Ownership interests;

F. Active business venues (counties, states, etc.);

G. Present status and projected direction of business;

H. The overall qualifications of the business to provide the services requested;

I. The qualifications of the firm's employees who will work on the Contract;

J. Respondent shall also list any lawsuits in which their team (firm & sub consultants) has been involved in relative to company contracts or other company business over the last five (5) years. The respondent shall also list any work their team failed to complete in accordance with any contract in the last five (5) years and describe details regarding the non-performance, including listing any officer or partner of their team who in the last five (5) years failed to complete a contract handled in his/her name.

T.A.L_MEDICAID_AGREEMENT.jpg
T.A.L_AWARDS_RECOGNITION_LETTERS_.pdf
SUNBIZ_DEP_OF_CORP_.pdf
Best_Business_Rate_2026.jpg
AHCA's_deficiency_free_surveys_2.pdf
T.A.L_Submittal_letter_.pdf
Therapeutic_Assisted_Living_Corp_Career_Source_Status_(1).eml

FIRM/EMPLOYEE QUALIFICATIONS *
Qualifications of the firm and the employees that will be assigned to the County.

Key personnel inclusive of resumes, licenses, business venues, etc.

LatashaRowell_WBE_&_MBE_Professional_Resume_Recognition_Updated.pdf
Treyvian_William's_resume_.pdf
Treyvian_Williams_administrative_cert.pdf
Rowell_Resume_2.pdf
Donald_Rowell_administrative_cert.pdf
DEON_NELSON'S_ACTIVE_CNA_.htm
Treyvian_Williams_Active_CNA_.htm
Latasha_Rowell's_Physical_Therapist_Assisted_License__(3).png
Latasha_Rowell_Administrative_Cert_2_(3).pdf

DEON_NELSON_Resume_.docx

SIMILAR PROJECTS AND REFERENCES *
The information provided in this section, must be current and the County must be able to contact references for verification as part of the evaluation process.

Unless specifically asked by the County, Flagler County shall not be listed as a reference. The respondent shall provide examples of similar projects which best illustrates the Respondent's qualification for the scope of services.

The Respondent shall provide examples of similar projects which best illustrates the proposed team's qualification for the scope of services. Respondent shall state the project title; location; owner name, address, and telephone number; years completed; project cost; brief description of project and relevance to this RSQ.

Provide a client reference for each of the representative projects including project name, client name, address, contact name and phone number and E-mail address. It is the firm's responsibility to ensure E-mail addresses provided are current and accurate. Use the attached Reference Form.

Please download the below document, complete, and upload.

- References_Form_11.18.24.pdf

One_Pharmacy_Letter_of_Support_Dr._Shoyoye.pdf
Representative_Project_No._1.pdf
Gentiva_recommendation.pdf
References_.pdf
Family_Recommendation_Debra_.pdf
Aviata_Recommendation_2.pdf
Excellence_Health_letter_of_recommendation_2.pdf

PROJECT APPROACH*
Overall project methodology/approach to support the needs and objectives of the project; including method for quality control.

7.5_Project_Approach.pdf
Local_Presents_Workforce_.pdf

PRICE PROPOSAL FORM*
Please download the below documents, complete, and upload.

- PRICE_PROPOSAL_FORM.pdf

Pricing information has not been unsealed yet

ACHA FORM 31-00-0009*
Please download the below documents, complete, and upload.

- ACHA_Form_31-00-0009.xls

PROOF_OF_FINANCIAL_ABILITY_REG_&_ASS.pdf

State of Florida
Department of State

I certify from the records of this office that THERAPEUTIC ASSISTED LIVING CORP is a corporation organized under the laws of the State of Florida, filed on November 26, 2019, effective November 19, 2019.

The document number of this corporation is P19000090814.

I further certify that said corporation has paid all fees due this office through December 31, 2025, that its most recent annual report/uniform business report was filed on March 17, 2025, and that its status is active.

I further certify that said corporation has not filed Articles of Dissolution.

Given under my hand and the Great Seal of the State of Florida at Tallahassee, the Capital, this the Seventeenth day of March, 2025



Secretary of State

Tracking Number: 2730115038CC

To authenticate this certificate,visit the following site,enter this number, and then follow the instructions displayed.

https://services.sunbiz.org/Filings/CertificateOfStatus/CertificateAuthentication

2026 FLORIDA PROFIT CORPORATION ANNUAL REPORT

DOCUMENT# P19000090814

Entity Name: THERAPEUTIC ASSISTED LIVING CORP

Current Principal Place of Business:

25 LYNDENHURST LN
PALM COAST, FL 32137

Current Mailing Address:

25 LYNDENHURST LN,
PALM COAST, FL 32137

FEI Number: 84-3805381

Name and Address of Current Registered Agent:

ROWELL, LATASHA D
25 LYNDENHURST LN
PALM COAST,, FL 32137 US

FILED
Feb 12, 2026
Secretary of State

6597845393CC

Certificate of Status Desired: Yes

The above named entity submits this statement for the purpose of changing its registered office or registered agent, or both, in the State of Florida.

SIGNATURE: LATASHA ROWELL 02/12/2026
Electronic Signature of Registered Agent — Date

Officer/Director Detail :

Title	P
Name	ROWELL, LATASHA D
Address	25 LYNDENHURST LN
City-State-Zip:	PALM COAST FL 32137

I hereby certify that the information indicated on this report or supplemental report is true and accurate and that my electronic signature shall have the same legal effect as if made under oath; that I am an officer or director of the corporation or the receiver or trustee empowered to execute this report as required by Chapter 607, Florida Statutes; and that my name appears above, or on an attachment with all other like empowered.

SIGNATURE: LATASHA ROWELL PRESIDENT 02/12/2026
Electronic Signature of Signing Officer/Director Detail — Date

DRUG FREE WORKPLACE

I, the undersigned, in accordance with Florida Statute 287.087, hereby certify that, (print/type name of firm):

LaTasha Rowell

- Publishes a written statement notifying that the unlawful manufacture, distribution, dispensing, possession, or use of a controlled substance is prohibited in the Workplace named above, and specifying actions that will be taken against violations of such prohibition.
- Informs employees about the dangers of drug abuse in the workplace, the firm's policy of maintaining a drug free working environment, and available drug counseling, rehabilitation, and employee assistance programs, and the penalties that may be imposed upon employees for drug use violations.
- Gives each employee engaged in providing commodities or contractual services that are under bid or proposal, a copy of the statement specified above.
- Notifies the employees that as a condition of working on the commodities or contractual services that are under bid or proposal, the employee will abide by the terms of the statement and will notify the employer of any conviction of, please or guilty or nolo contendere to, any violation of Chapter 1893, or of any controlled substance law of the State of Florida or the United States, for a violation occurring in the workplace, no later than five (5) days after such conviction, and requires employees to sign copies of such written statement to acknowledge their receipt.
- Imposes a sanction on, or requires the satisfactory participation in, a drug abuse assistance or rehabilitation program, if such is available in the employee's community, by any employee who is so convicted.
- Makes a good faith effort to continue to maintain a drug free workplace through the implementation of the Drug Free Workplace program.
- "As a person authorized to sign this statement, I certify that the above-named business, firm or corporation complies fully with the requirements set forth herein".

LaTasha Rowell
Authorized Signature

8-19-2026
(Date)

LaTasha Rowell
(Print Name)

STATE OF FLORIDA, COUNTY OF Flagler

The foregoing instrument was acknowledged before me this 19 day of August, 2026 by LATASHA Rowell, who is personally known to me or who has produced ___ Florida Driver License as identification and who did take an oath.

My Commission Expires: 12-03-2029

Notary Public

COLETTE ROBINSON
Commission # HH 746154
Expires December 3, 2029

8/19/2026
Date

PROPOSAL FORM

The undersigned hereby declare(s) that [firm name] Therapeutic Assisted Living Corp. has carefully examined the specifications to furnish the products and/or services detailed in the technical specifications or scope of work and will furnish said product or services according to the specifications or scope of work detailed within this RFP.

I hereby certify that I have read and understand the requirements of this Request for Proposals and that I, as the proposer, will comply with all requirements, and that I am duly authorized to execute this proposal/offer document and any contract(s) and/or other transactions required by award of this RFP.

Vendor hereby acknowledges that the submittal has been approved by an authorized signatory with the firm who is authorized to execute contracts/agreements with Flagler County Board of County Commissioners. Vendor further agrees that by submitting the proposal electronically, the authorized signatory does thereby accept and acknowledge use as an official record with Flagler County.

Further, as attested to by below signature, I will provide the required insurance, per the *Required Types* of *Insurance*, upon notification of recommendation of award.

The County reserves the right to negotiate with the award vendor(s) for additional items similar in nature not known at time of closing.

The vendor acknowledges that information provided in this proposal is true and correct:

× LaTasha Rowell
Signature / Authorized Signatory

LaTasha Rowell
Printed Name

Administrator / Owner / President — 8/19/2026
Title — Date

Therapeutic Assisted Living Corp
Company Name

25 Lyndenhurst lane Palm Coast FL. 32137
Full Address

904-501-8991 — 844-769-0772 — therapeuticalf@gmail.com
Telephone — Fax — E-mail Address

090326504 — 84-3805381
Dun & Bradstreet # — Federal I.D. #

Form **W-9**
(Rev. December 2011)
Department of the Treasury
Internal Revenue Service

Request for Taxpayer Identification Number and Certification

Give Form to the requester. Do not send to the IRS.

Print or type
See Specific Instructions on page 2.

Name (as shown on your income tax return)
LaTasha Dion Rowell

Business name/disregarded entity name, if different from above
Therapeutic Assisted Living Corp.

Check appropriate box for federal tax classification:
☐ Individual/sole proprietor ☐ C Corporation ☑ S Corporation ☐ Partnership ☐ Trust/estate

☑ Limited liability company. Enter the tax classification (C=C corporation, S=S corporation, P=partnership) ▶ S-Corp.

☐ Exempt payee

☐ Other (see instructions) ▶

Address (number, street, and apt. or suite no.)
25 Lyndenhurst Lane

Requester's name and address (optional)

City, state, and ZIP code
Palm Coast FL. 32137

List account number(s) here (optional)

Part I Taxpayer Identification Number (TIN)

Enter your TIN in the appropriate box. The TIN provided must match the name given on the "Name" line to avoid backup withholding. For individuals, this is your social security number (SSN). However, for a resident alien, sole proprietor, or disregarded entity, see the Part I instructions on page 3. For other entities, it is your employer identification number (EIN). If you do not have a number, see *How to get a TIN* on page 3.

Note. If the account is in more than one name, see the chart on page 4 for guidelines on whose number to enter.

Social security number
5 9 0 - 0 7 - 7 5 5 0

Employer identification number
8 4 - 3 8 0 5 3 8 1

Part II Certification

Under penalties of perjury, I certify that:

1. The number shown on this form is my correct taxpayer identification number (or I am waiting for a number to be issued to me), and
2. I am not subject to backup withholding because: (a) I am exempt from backup withholding, or (b) I have not been notified by the Internal Revenue Service (IRS) that I am subject to backup withholding as a result of a failure to report all interest or dividends, or (c) the IRS has notified me that I am no longer subject to backup withholding, and
3. I am a U.S. citizen or other U.S. person (defined below).

Certification instructions. You must cross out item 2 above if you have been notified by the IRS that you are currently subject to backup withholding because you have failed to report all interest and dividends on your tax return. For real estate transactions, item 2 does not apply. For mortgage interest paid, acquisition or abandonment of secured property, cancellation of debt, contributions to an individual retirement arrangement (IRA), and generally, payments other than interest and dividends, you are not required to sign the certification, but you must provide your correct TIN. See the instructions on page 4.

Sign Here Signature of U.S. person ▶ LaTasha Rowell Date ▶ 8/8/2024

General Instructions

Section references are to the Internal Revenue Code unless otherwise noted.

Purpose of Form

A person who is required to file an information return with the IRS must obtain your correct taxpayer identification number (TIN) to report, for example, income paid to you, real estate transactions, mortgage interest you paid, acquisition or abandonment of secured property, cancellation of debt, or contributions you made to an IRA.

Use Form W-9 only if you are a U.S. person (including a resident alien), to provide your correct TIN to the person requesting it (the requester) and, when applicable, to:

1. Certify that the TIN you are giving is correct (or you are waiting for a number to be issued),
2. Certify that you are not subject to backup withholding, or
3. Claim exemption from backup withholding if you are a U.S. exempt payee. If applicable, you are also certifying that as a U.S. person, your allocable share of any partnership income from a U.S. trade or business is not subject to the withholding tax on foreign partners' share of effectively connected income.

Note. If a requester gives you a form other than Form W-9 to request your TIN, you must use the requester's form if it is substantially similar to this Form W-9.

Definition of a U.S. person. For federal tax purposes, you are considered a U.S. person if you are:

- An individual who is a U.S. citizen or U.S. resident alien,
- A partnership, corporation, company, or association created or organized in the United States or under the laws of the United States,
- An estate (other than a foreign estate), or
- A domestic trust (as defined in Regulations section 301.7701-7).

Special rules for partnerships. Partnerships that conduct a trade or business in the United States are generally required to pay a withholding tax on any foreign partners' share of income from such business. Further, in certain cases where a Form W-9 has not been received, a partnership is required to presume that a partner is a foreign person, and pay the withholding tax. Therefore, if you are a U.S. person that is a partner in a partnership conducting a trade or business in the United States, provide Form W-9 to the partnership to establish your U.S. status and avoid withholding on your share of partnership income.

Plastridge INSURANCE SINCE 1919

08/21/2026

RE: RFP 26-RFP-022 – Operation and Program Administration of the Flagler County Adult Day Care at the David I. Siegel Center, located at 1000 Belle Terre Blvd., Palm Coast, Florida/Therapeutic Assisted Living Corp.

To Flagler County,

This letter serves as confirmation that Therapeutic Assisted Living Corp is actively working with our agency to secure all necessary insurance coverages required by RFP 26-RFP-022 for Adult Day Care Services. These coverages will include:

- General Liability Insurance $1m/$2m Estimated Annual Premium $10k
- Professional Liability Insurance $1m/$1m Estimated Annual Premium Included with General Liability
- Worker's Compensation Insurance Statutory Limits Estimated Annual Premium $1,100
- Employers Liability $1m Estimated Annual Premium included in Workers Compensation Premium
- Auto Liability Insurance $1m Symbol 7,8,9 Estimated Annual Premium symbol 7 $6k and 7,8,9 $20k
- Pollution Liability Estimated Annual Premium $500
- AM Best "A-" rated or better
- The required policies and endorsements will be issued in compliance with Flagler County's additional insured, primary and non-contributory, and waiver of subrogation requirements as applicable under RFP 26-RFP-022
- Any additional insurance as required by the final contract terms

We confirm that our agency is prepared to issue these coverages immediately upon contract award and prior to the commencement of services. Should any additional documentation be required during the evaluation process, we will be pleased to provide it.

Sincerely,

Shelagh Grubb

Shelagh Grubb, CPCU, CIC

O: 800 290 1143 **D:** 561 819 1559 | **F:** 561 819 1656 I **C**: 407 235 5389

Plastridge Insurance Agency | Plastridge.com

Plastridge INSURANCE SINCE 1919
HEALTHCARE DIVISION

HOLD HARMLESS AGREEMENT

I, LaTasha Rowell, (*print owner's name*), am the owner of Therapeutic Assisted Living Corp. (*print company name*), an incorporated/unincorporated business operating in the State of Florida. As such, I am bound by all laws of the state of Florida, including but not limited to those regarding the workers' compensation law.

I hereby affirm that I or [the above-named business] employs fewer than four employees, all of whom are listed below, including myself, and therefore, the business is exempt from the statutory requirement for workers' compensation insurance for its employees. I certify that I will provide Flagler County Board of County Commissioners with the name of each new employee together with all required waivers and releases for each prior to any employee being allowed to work to provide services under the Contract set forth below. If any such employee is allowed to work without a signed waiver and release, such action will be a material breach of this Agreement. All signed waivers and releases shall be furnished before the commencement of any work by an employee or the undersigned to the County Project Manager or designated county representative.

On_____, 20_, Flagler County Board of County Commissioners and I or (*the above-named business)* entered into a Contract for_____(*please insert name of Contract*) (hereinafter "Agreement") which is incorporated by reference herein.

On behalf of myself, my business, and the employees listed below, I and they hereby agree to waive and release any and all workers' compensation claims or liens under Chapter 440, Florida Statutes, against Flagler County Board of County Commissioners and its agents, officials and employees, arising from any work or services provided under the Agreement whether or not it shall be alleged or determined that the act was caused by intention, or through negligence or omission of Flagler County Board of County Commissioners or its agents, officials and employees or subcontractors.

In the event that a workers' compensation claim or lien is made against Flagler County Board of County Commissioners and/or its agents, officials or employees by myself or my employees or agents as a result of any work or services performed under the Agreement, I agree to indemnify, keep and hold harmless Flagler County Board of County Commissioners, its agents, officials and employees, against all injuries, deaths, losses, damages, claims, liabilities, judgments, costs and expenses, direct, indirect or consequential (including, but not limited to, fees and charges of attorneys and other professionals) arising out of the Agreement with Flagler County Board of County Commissioners, whether or not it shall be alleged or determined that the act was caused by intention or through negligence or omission of Flagler County Board of County Commissioners or its employees, agents, or subcontractors. I or the above-named business shall pay all charges of attorneys, and all costs and other expenses incurred in connection with the indemnity provided herein, and if any judgment shall be rendered against Flagler County Board of County Commissioners in any action indemnified hereby, I or the above-named business shall, at my or its own expense, satisfy and discharge the same. The foregoing is not intended, nor should it be construed as, a waiver of sovereign immunity of Flagler County Board of County Commissioners under Section 768.28, Florida Statutes.

Owner: LaTasha Rowell (print name) LaTasha Rowell
(signature)

Employee 1: Treyvon Williams (print name) Treyvian Williams
(signature)

Employee 2: Deon Nelson (print name) Deon Nelson
(signature)

Employee 3: Donald Rowell (print name) Donald Rowell
(signature)

STATE OF Florida

COUNTY OF Flagler

Sworn to and subscribed before me this 19 day of August, 2024 by LATASHA ROWELL, who is/are personally known to me or who has/have produced Florida Driver License as identification.

Colette Robinson

NOTARY PUBLIC – STATE OF Florida

Type or print name: Colette Robinson

Commission No.: HH 746154

Commission Expires: 12-03-2029

Seal: COLETTE ROBINSON
Commission # HH 746154
Expires December 3, 2029

View current license information at: Floridahealthfinder.gov

LICENSE #: 13526
CERTIFICATE #: 72589

State of Florida

AGENCY FOR HEALTH CARE ADMINISTRATION
DIVISION OF HEALTH QUALITY ASSURANCE

ASSISTED LIVING FACILITY

LICENSED with LIMITED MENTAL HEALTH

This is to confirm that THERAPEUTIC ASSISTED LIVING CORP has complied with the rules and regulations adopted by the State of Florida, Agency for Health Care Administration, as authorized by Chapter 429, Part I, Florida Statutes and 59A-36, Florida Administrative Code, and is authorized to operate the following:

THERAPEUTIC ASSISTED LIVING CORP
25 Lyndenhurst Lane
Palm Coast, FL 32137

Total Capacity: 6
Optional State Supplementation Residents: 0
Private Pay Residents: 6

EFFECTIVE DATE: 10/21/2024

EXPIRATION DATE: 10/20/2026

Shevaun L. Harris, Secretary

RON DESANTIS
GOVERNOR

SHEVAUN L. HARRIS
SECRETARY

July 11, 2025

Email: latashagilyard@gmail.com

Latasha Dion Rowell, Administrator
Therapeutic Assisted Living Corp
25 Lyndenhurst Lane
Palm Coast, FL 32137

File Number: 11969778
License Number: 13526
Provider Type: Assisted Living Facility

RE: Facility located at 25 Lyndenhurst Lane, Palm Coast

Dear Administrator:

The enclosed Assisted Living Facility license with license number 13526 and certificate number 72589 is issued for the above provider effective October 21, 2024 through October 20, 2026. The license is being issued for approval of the renewal application.

The Agency no longer mails hard copies of licenses. Per Section 408.804(2), Florida Statutes, providers are required to print the license and post it in a conspicuous place readily visible to clients at the entrance of your facility.

Review your certificate thoroughly to ensure that all information is correct and consistent with your records. If errors are noted, please contact the Assisted Living Unit.

Please take a short customer satisfaction survey on our website at ahca.myflorida.com/survey/ to let us know how we can serve you better. Additional licensure information can be found at http://ahca.myflorida.com/assistedliving.

If we may be of further assistance, please contact the unit at (850) 412-4304 or me directly at 850-412-4329 or by email at Pearlie.Austin@ahca.myflorida.com.

Sincerely,

Pearlie Austin

Pearlie Austin
Medical Health Care Program Analyst
Assisted Living Unit
Division of Health Quality Assurance

CERTIFICATE of ACHIEVEMENT

Conferred to:

Latasha D. Gilyard

For obtaining a passing score on the

ASSISTED LIVING FACILITY CORE COMPETENCY TEST

Certification #: ***171241826***

Presented by

The MacDonald Research Institute Testing Office
28953 SR 54, Wesley Chapel, FL 33543

TMRI

The MacDonald Research Institute

Mary C. Mayhew, Secretary
Agency for Health Care Administration

December 14, 2019

Date

MQA Online Services

Logged in as ***Rowell, Latasha Dion***

Update Account | Logoff | Contact Us

My Dashboard

Don't Delay, Get Screened today!

Effective July 1, 2025, HB 975 requires that all health care practitioners undergo a fingerprint-based background screening as a requirement for obtaining licensure. If you are renewing your license with the Department, you must have a screening completed for your renewal application to be processed. For detailed information, including frequently asked questions, visit https://flhealthsource.gov/backgroundscreening/. Exceptions to this requirement: Emergency Medical Technician, Paramedic, Radiological Technician, Pharmacy Interns, and Registered Pharmacy Technicians.

Important information about your dashboard:

- To download a copy of your e-License, please navigate to the **"Licensure Documents"** menu located within the **"Additional Activities"** section below.
- When your profession opens for renewal a **"Renew My License"** option will become available no later than 90 days prior to your license expiration date. If you do not see the **"Renew My License"** option, please check back later.
- If you are trying to **reactivate from an inactive or a retired status**, this cannot be completed online unless you are eligible to reactivate your inactive license during a public health emergency pursuant to s. 381.00315(1)(c)3., Florida Statutes. Please contact your board office for more information.
- If your profession is not in renewal and you need a duplicate license, to request a name change or perform any other license maintenance activity, please choose your option under **"Manage My License"**.
- If you have not yet added your license to your account, you can do this by selecting the **"Add My License or Previous Application"** option under the **"Additional Activities"** section below.

To begin, choose an option then hit the **"Select"** button. You will return to this dashboard after you have finished.

License Information Hide Details

License Number:	**#26036**
License Type:	**Physical Therapist Assistant**
License Status:	**Clear**
License Expiry:	**11/30/2027**
Address:	**25 LYNDENHURST LN PALM COAST FL 32137**
Phone:	**904-501-8991**

Manage My License

Physical Therapist Assistant #26036 | Choose an Application | Select

My Application

To start a new application or resume a previously saved application.

PROHIBITION AGAINST CONTINGENT FEES:

In accordance with Florida Statute 287.055(6)(a), the following statement, duly signed and notarized, must be included in each proposal:

The firm, Therapeutic Assistant Living Corp., warrants that he or she has not employed or retained any company or person, other than a bona fide employee working solely for the respondent to solicit or secure this agreement and that he or she has not paid or agreed to pay any person, company, corporation, individual, or firm, other than a bona fide employee working solely for the respondent any fee, commission, percentage, gift, or other consideration contingent upon or resulting from award or making of this agreement.

By LaTasha Rowell Date 8/19/2026
(Signature)

By LaTasha Rowell, President, Administrator
Corporate Officer Name & Title

STATE OF Florida
COUNTY OF Flagler

Sworn to/affirmed and subscribed before me this 19 *day of* August, 2026, *by* LaTasha Rowell, *who is personally known to me or who has produced* Florida Driver License *as identification.*

NOTARY PUBLIC – STATE OF Florida
Type or print name: Colette Robinson
Commission No.: HH 746154
Commission Expires: 12-03-2029

(Seal)

COLETTE ROBINSON
Commission # HH 746154
Expires December 3, 2029

Contractor Name: LaTasha Rowell
Solicitation Number: 26-RFP-022

HUMAN TRAFFICKING ATTESTATION PURSUANT TO SECTION 787.06, FLORIDA STATUTES

Name of Entity/Contractor: Therapeutic Assisted Living Corp ("Nongovernmental Entity")

This form has been completed by a duly authorized officer or representative of the Nongovernmental Entity in conjunction with the execution, renewal, or extension of a contract with Flagler County Board of County Commissioners, a governmental entity and political subdivision of the State of Florida, ("Governmental Entity") in compliance with Section 787.06(13), Florida Statutes, (2024).

The Nongovernmental Entity acknowledges that Section 787.06(13), Florida Statutes, provides that when a contract is executed, renewed, or extended between a nongovernmental entity and a governmental entity, the nongovernmental entity must provide the governmental entity with an affidavit signed by an officer or a representative of the nongovernmental entity under penalty of perjury attesting that the nongovernmental entity does not use coercion for labor or services. For purposes of this requirement, "labor" means work of economic or financial value and "services" means any act committed at the behest of, under the supervision of, or for the benefit of another. The term, "services" includes, but is not limited to, forced marriage, servitude, or the removal of organs.

Pursuant to Section 787.06, Florida Statutes, when a contract is executed, renewed, or extended between you, a nongovernmental entity, and Flagler County Board of County Commissioners, a governmental entity in the State of Florida, you are hereby providing this affidavit under penalties of perjury that you do not use ***coercion to* employ any person for *labor* or *services,*** Coercion includes, without limitation, using or threatening to use physical force against any person; restraining, isolating, or confining or threatening to restrain, isolate, or confine any person without lawful authority and against her or his will; using lending or other credit methods to establish a debt by any person when labor or services are pledged as a security for the debt, if the value of the labor or services as reasonably assessed is not applied toward the liquidation of the debt, the length and nature of the labor or services are not respectively limited and defined; destroying, concealing, removing, confiscating, withholding, or possessing any actual or purported passport, visa, or other immigration document, or any other actual or purported government identification document, of any person; causing or threatening to cause financial harm to any person; enticing or luring any person by fraud or deceit; or providing a controlled substance as outlined in Schedule I or Schedule II of Section 893.03, Florida Statutes, to any person for the purpose of exploitation of that person.

This signed attestation is provided to the Governmental Entity to comply with the statutory requirement. if, at any time in the future, the Nongovernmental Entity does use coercion for labor or services, the Nongovernmental Entity will immediately notify the Governmental Entity and no contracts may be executed, renewed, or extended between the parties.

This attestation is made for the benefit of, and reliance by, the Governmental Entity.

Under penalties of perjury, I declare that I have read the foregoing statement and that the facts stated in it are true.

Printed Name: LaTasha Rowell Title: Administrator, President

Signature: LaTasha Rowell Date: 8/19/2024

RON DESANTIS
GOVERNOR

SHEVAUN L. HARRIS
SECRETARY

0332073790

PRV-9006-D/XX/0332073790/1
THERAPEUTIC ASSISTED LIVING CORP
25 LYNDENHURST LN
PALM COAST FL 32137-9521

August 13, 2026

Re: **Florida Medicaid Provider ID: 1084689**

Dear Provider:

Welcome to the Florida Medicaid program.

The Agency for Health Care Administration (Agency) has approved the Florida Medicaid provider renewal application for the provider listed above, and has elected to enter into an agreement between the Agency and the provider for purposes of the provider's participation in the Florida Medicaid program.

No agency signature is required to make this agreement valid and enforceable.

The agreement will remain in effect until **10/21/2029**, unless otherwise terminated.

The agreement is renewable only by mutual consent of the two parties and may be terminated without cause upon thirty (30) days written notice by either party.

The agreement becomes null and void upon transfer of assets, change of ownership, or upon discovery by the agency of the submission of a materially incomplete, misleading or false provider application unless subsequently ratified or approved by the agency.

For questions related to this letter, or any other provider enrollment or maintenance topic, please contact the Provider Enrollment Call Center at 1-800-289-7799, option 4.

Sincerely,

Florida Medicaid
Agency for Health Care Administration

cc:Provider File

PRV9006D 08/14b

2727 Mahan Drive • Mail Stop # 22
Tallahassee, FL 32308
AHCA.MyFlorida.com

Facebook.com/AHCAFlorida
X.com/AHCA_FL

BUSINESS RATE
2375 E CAMELBACK RD STE 600
PHOENIX AZ 85016-3493

BusinessRate

★ ★ ★ ★ ★

RECOGNIZING TOP PERFORMERS.
EMPOWERING BUSINESS EXCELLENCE.

078484 5 228 259 **********AUTO**SCF 328
THERAPEUTIC ASSISTED LIVING
25 LYNDENHURST LN
PALM COAST FL 32137-9521

July 24, 2026

Dear Therapeutic Assisted Living Team,

It is with great pleasure that we recognize your organization for its outstanding achievement as a **Top Assisted Living Facility in Palm Coast, 32137 for 2026, based on Google reviews.** This distinction reflects a level of excellence that has earned the confidence, respect, and praise of the customers you serve each day.

Therapeutic Assisted Living has distinguished itself among the highest-rated businesses in your category and market. This recognition is based on verified customer feedback and publicly available review data, drawn from more than 26 million businesses and 1.7 billion reviews compiled over 18 years, reflecting the voice of the people you serve.

Your complete ranking report is now available to view. It details the businesses you ranked ahead of, your percentile within your category, and your BusinessRate scores; a fuller picture of where you stand among top performers in Palm Coast, 32137. Many recognized businesses also choose to commemorate this achievement and share it with their community; options for displaying your recognition at your location, on your website, and with your customers are included alongside your report.

On behalf of BusinessRate, we extend our sincere congratulations on this well-earned recognition. We wish you continued success in the years ahead and thank you for your contribution to the economic vitality and service excellence of the Palm Coast, 32137 community.

Respectfully,

Kyle Pittman
Founder & President
BusinessRate

VIEW YOUR AWARD OPTIONS

Go to **businessrate.com/awards**

Enter code: **R9YRGY**

Powered by Google Reviews

Scan to view your award options

078484

★ ★ ★ ★ ★

BUSINESSRATE.COM | RECOGNIZING TOP PERFORMERS. EMPOWERING BUSINESS EXCELLENCE.

August 4, 2026

Dear Latasha Gilyard,

You have been selected for inclusion as a **2026 Top Health Executive** in Global Who's Who Online, a recognition reserved for leaders who play a critical role in today's healthcare landscape. In your position as Alf Administrator of Therapeutic Assisted Living Corp., you oversee essential functions that support both clinical and operational excellence. This acknowledgment reflects the impact of your leadership and sets the stage for recognizing the vital contributions your organization provides to the community.

In addition, Therapeutic Assisted Living Corp. has been identified as a **2026 Top Health Service Organization**, representing Palm Coast, FL for the essential role it plays within the continuum of care. The continued growth and stability of Therapeutic Assisted Living Corp. reflect exceptional leadership, resilience, and a clear commitment to serving the healthcare needs of your community. Whether supporting patients directly or complementing the work of physicians and other providers, your organization contributes meaningfully to the strength and reliability of the healthcare system.

For more than two decades, Global Who's Who Online has served as a credible platform for recognizing top healthcare executives, distinguished professionals, and leading health service organizations. Our registry is widely referenced by patients, peers, and industry researchers seeking verifiable information. The platform incorporates adaptive A.I. that responds to key terms and medical aggravators tied to your profile, helping enhance online visibility and ensuring accurate representation in search results.

To activate your listing, please complete and return the response form below. There is no charge for inclusion. Upon receipt, you will receive your welcome email and log in credentials. You can respond by faxing the form to **888-460-8601**, or by scanning and email to **lindal@theglobalwhoswho.com**.

Sincerely,

Nancy Preston

Latasha D Rowell Administrator Latasha Rowell
First Name M.I. Last Name Title Signature

Therapeutic Assisted Living Corp therapeuticalf@gmail.com
Current Organization/Company E-Mail / Web Address

25 Lyndenhurst lane Palm Coast FL 32137
Street Address City State Zip

(904) 501-8991 secondary # (386) 597-2167
Business Phone (Published by request) Cell Phone (Not for publication) Home Phone (Not for publication)

Assisted Living Services.
Product/Services Type of Organization

If you wish to be removed from future faxes, call 1(516)814-7876
Recipients of this fax have a prior existing business relationship or have opted to receive offers through a third-party provider.
4250 Veterans Memorial Highway, Suite 2050, Holbrook, New York 11741
©Copyright 2025 All Rights Reserved.
Telephone (631)588-8600 Fax 1-888-460-8601

State of Florida
Department of State

I certify from the records of this office that THERAPEUTIC ASSISTED LIVING CORP is a corporation organized under the laws of the State of Florida, filed on November 26, 2019, effective November 19, 2019.

The document number of this corporation is P19000090814.

I further certify that said corporation has paid all fees due this office through December 31, 2025, that its most recent annual report/uniform business report was filed on March 17, 2025, and that its status is active.

I further certify that said corporation has not filed Articles of Dissolution.

Given under my hand and the Great Seal of the State of Florida at Tallahassee, the Capital, this the Seventeenth day of March, 2025

GREAT SEAL OF THE STATE OF FLORIDA
IN GOD WE TRUST

Secretary of State

Tracking Number: 2730115038CC

To authenticate this certificate,visit the following site,enter this number, and then follow the instructions displayed.

https://services.sunbiz.org/Filings/CertificateOfStatus/CertificateAuthentication


TOP 3
2026
AWARD WINNER
BusinessRate
Therapeutic
Assisted Living
Assisted Living Facility
Palm Coast, FL
32137
Powered by Google Reviews
BENCHMARK

RON DESANTIS
GOVERNOR

SHEVAUN L. HARRIS
SECRETARY

April 25, 2025

Latasha Rowell
Therapeutic Assisted Living Corp
25 Lyndenhurst Ln
Palm Coast, FL 32137

Dear Ms. Rowell:

This letter reports findings of a state licensure survey that was conducted on April 25, 2025 by a representative of this office. Attached is the provider's copy of the State (3020) Form, which indicates there were no discernible deficiencies noted on the date of the survey.

Thank you for the assistance provided. Should you have any questions please call the office at (904) 798-4201.

Sincerely,

for Amanda Wisehart
Health Facility Evaluator Supervisor

AW/gm
Enclosure

1GGN

Jacksonville Field Office
621 N. Davis St., Bldg. A, Suite 116
Jacksonville, FL 32209
Phone:(904) 798-4201; Fax:(904) 359-6064
AHCA.MyFlorida.com

Facebook.com/AHCAFlorida
X.com/AHCA_FL/HCA_FL

STATEMENT OF DEFICIENCIES AND PLAN OF CORRECTION	(X1) PROVIDER/SUPPLIER/CLIA IDENTIFICATION NUMBER:	(X2) MULTIPLE CONSTRUCTION	(X3) DATE SURVEY COMPLETED
	AL11969778	A. BUILDING: _____ B. WING _____	04/25/2025

NAME OF PROVIDER OR SUPPLIER	STREET ADDRESS, CITY, STATE, ZIP CODE
THERAPEUTIC ASSISTED LIVING CORP	25 LYNDENHURST LN PALM COAST, FL 32137

(X4) ID PREFIX TAG	SUMMARY STATEMENT OF DEFICIENCIES (EACH DEFICIENCY MUST BE PRECEDED BY FULL REGULATORY OR LSC IDENTIFYING INFORMATION)	ID PREFIX TAG	PROVIDER'S PLAN OF CORRECTION (EACH CORRECTIVE ACTION SHOULD BE CROSS-REFERENCED TO THE APPROPRIATE DEFICIENCY)	(X5) COMPLETE DATE
A 000	Initial Comments An abbreviated relicensure survey with limited mental health monitoring was conducted at Therapeutic Assisted Living Corp on 04/25/2025. Deficient practice was not identified at the time of the survey.	A 000		

RON DESANTIS
GOVERNOR

JASON WEIDA
SECRETARY

November 13, 2023

Latasha Rowell
Therapeutic Assisted Living Corp
25 Lyndenhurst Ln
Palm Coast, FL 32137

Dear Ms. Rowell:

This letter reports findings of a state licensure survey that was conducted on November 8-13, 2023 by representatives of this office. Attached is the provider's copy of the State (3020) Form, which indicates there were no discernible deficiencies noted on the date of the survey.

The Quality Assurance Questionnaire has long been employed to obtain your feedback following survey activity. This form has been placed on the Agency's website at http://ahca.myflorida.com/Publications/Forms.shtml as a first step in providing a web-based interactive consumer satisfaction survey system. You may access the questionnaire through the link under Health Facilities and Providers on this page. Your feedback is encouraged and valued, as our goal is to ensure the professional and consistent application of the survey process.

Thank you for the assistance provided to the surveyor. Should you have any questions please call the office at (904) 798-4201.

Sincerely,

Amanda Wisehart

Amanda Wisehart
Health Facility Evaluator Supervisor

AW/rb
Enclosure

1GGN

Jacksonville Field Office
921 N. Davis St., Bldg. A, Suite 115
Jacksonville, FL 32209
Phone:(904) 798-4201; Fax:(904) 359-6054
AHCA.MyFlorida.com

Facebook.com/AHCAFlorida
Youtube.com/AHCAFlorida
Twitter.com/AHCA_FL
SlideShare.net/AHCAFlorida

PRINTED: 11/13/2023
FORM APPROVED

(X1) PROVIDER/SUPPLIER/CLIA IDENTIFICATION NUMBER:	(X2) MULTIPLE CONSTRUCTION	(X3) DATE SURVEY COMPLETED
[redacted]	A. BUILDING _____ B. WING _____	11/09/2023

NAME OF PROVIDER OR SUPPLIER	STREET ADDRESS, CITY, STATE, ZIP CODE
[redacted] ASSISTED LIVING CORP	35 LIVINGSMART LN PALM COAST, FL 32137

(X4) ID PREFIX TAG	SUMMARY STATEMENT OF DEFICIENCIES (EACH DEFICIENCY MUST BE PRECEDED BY FULL REGULATORY OR LSC IDENTIFYING INFORMATION)	ID PREFIX TAG	PROVIDER PLAN OF CORRECTION (EACH CORRECTIVE ACTION SHOULD BE CROSS-REFERENCED TO THE APPROPRIATE DEFICIENCY)	(X5) COMPLETE DATE
A [redacted]	Initial Comments A [redacted] survey with Limited Mental Health monitoring was conducted at Therapeutic Assisted Living Corp from 11/6/2023 to 11/7/2023. The facility had no deficiencies at the time of this investigation.	A 000		

RON DESANTIS
GOVERNOR

October 15, 2020

Latasha Gilyard
Therapeutic Assisted Living Corp
25 Lyndenhurst Lane
Palm Coast, FL 32137

Dear Latasha Gilyard:

This letter reports the findings of an initial Licensure survey conducted on October 8, 2020 by a representative of this office. Attached is the provider's copy of the State (3020) Form, which indicates there were no deficiencies noted on the date of the survey.

The *Quality Assurance Questionnaire* has long been employed to obtain your feedback following survey activity. This form has been placed on the Agency's website at http://ahca.myflorida.com/Publications/Forms.shtml as a first step in providing a web-based interactive consumer satisfaction survey system. You may access the questionnaire through the link under **Health Facilities and Providers** on this page. Your feedback is encouraged and valued, as our goal is to ensure the professional and consistent application of the survey process.

Thank you for the assistance provided to the surveyor. Should you have any questions please call this office at (904) 798-4201.

Sincerely,

amanda wisehart

Amanda Wisehart
Health Facility Evaluator Supervisor
Division of Health Quality Assurance

LL/AW/sm
Enclosure

34IJ

Jacksonville Field Office
921 N. Davis St., Bldg. A, Suite 115
Jacksonville, FL 32209
Phone:(904) 798-4201; Fax:(904) 359-6054
AHCA.MyFlorida.com

Facebook.com/AHCAFlorida
Youtube.com/AHCAFlorida
Twitter.com/AHCA_FL
SlideShare.net/AHCAFlorida

SUBMITTAL LETTER / FIRM PROFILE

RFP 26-RFP-022
Operation and Program Administration of the Flagler County Adult Day Care at the David I. Siegel Center

Submitted by: Therapeutic Assisted Living Corp.
Authorized Representative: LaTasha Rowell, Owner/Administrator
Business Address: 25 Lyndenhurst Lane, Palm Coast, Florida 32137
Date: August 22, 2026

Flagler County Board of County Commissioners
Office of Procurement and Contracts
1769 E. Moody Blvd., Building 2
Bunnell, Florida 32110

Re: RFP 26-RFP-022 – Operation and Program Administration of the Flagler County Adult Day Care at the David I. Siegel Center

Therapeutic Assisted Living Corp. respectfully submits this Submittal Letter and Firm Profile in response to RFP 26-RFP-022. Our organization is a locally established senior-care provider based in Palm Coast, Florida, with experience in licensed residential assisted living, therapeutic support, direct care, regulatory compliance, care coordination, family communication, and administration of services for older adults and other vulnerable populations. We understand that Flagler County is seeking a qualified provider to assume full operational, programmatic, and financial responsibility for the David I. Siegel Adult Day Care Center and to operate the program as a sustainable community-based service.

Therapeutic Assisted Living Corp. is prepared to bring a person-centered, therapeutic, community-focused model to the Center, with emphasis on participant safety, meaningful engagement, caregiver support, dementia-informed services, regulatory compliance, local workforce development, and long-term fiscal sustainability. The following firm profile is organized to address Items A through J required under Section 7.2 of the solicitation.

A. Brief History of the Business

Therapeutic Assisted Living Corp. is a Palm Coast-based senior-care organization established to provide compassionate, structured, person-centered support in a home-like environment. The organization has been operated and administered by LaTasha Rowell and has provided licensed assisted living services in Flagler County since 2020. Since opening, Therapeutic Assisted Living Corp. has maintained a deficiency-free survey record through the present, reflecting Management's commitment to regulatory compliance, quality assurance, resident safety, documentation, and consistent operational oversight. Its operating model emphasizes individualized care, therapeutic engagement, nutrition, activities of daily living support, medication-related assistance within licensed scope, family communication, and coordination with outside healthcare providers. Management brings more than 20 years of healthcare experience spanning direct patient care, rehabilitation, home health, and senior-care operations. The organization has developed its services with a focus on dignity, safety, accountability, and strong relationships with residents, families, healthcare partners, and the local community.

B. Organizational Structure of the Business

Therapeutic Assisted Living Corp. operates with a direct management structure designed for clear accountability and responsive decision-making. LaTasha Rowell serves as President and Owner/Administrator of Therapeutic Assisted Living Corp. and provides executive oversight, regulatory coordination, financial management, personnel supervision, quality assurance, and community relations. Program operations are supported by credentialed direct-care personnel and administrative support. For the David I. Siegel Adult Day Care Center, the proposed structure includes an Administrator/Center Director, direct-care staff, licensed nursing coverage through RN/LPN personnel as required, activity/program support, and additional support positions as census and program needs expand. The organization will maintain clear lines of authority, documented job descriptions, staff training records, and an organizational chart for the program.

C. Legal Entity

Therapeutic Assisted Living Corp. is an established Florida corporation and operates under an S corporation tax election. The firm is registered with the Florida Department of State, Division of Corporations. Documentation confirming the corporation's legal entity status and active Florida registration is included with the proposal materials. Therapeutic Assisted Living Corp. will be the contracting entity responsible for performance of services under any resulting agreement.

D. Florida Department of State / Sunbiz Registration

Therapeutic Assisted Living Corp. is registered with the Florida Department of State, Division of Corporations, and maintains an active Sunbiz record. A current Sunbiz report/certificate is included in the proposal submission as supporting documentation.

E. Ownership Interests

Therapeutic Assisted Living Corp. is locally owned and managed. LaTasha Rowell serves as Owner/Administrator and is the principal responsible for the organization's strategic direction, operations, compliance, staffing, and

financial oversight. Any ownership information required for licensing, background screening, contracting, or disclosure purposes will be provided to Flagler County and the appropriate regulatory agencies.

F. Active Business Venues

Therapeutic Assisted Living Corp. currently conducts business in Palm Coast and Flagler County, Florida. Its present operations are centered on senior-care services and community-based healthcare support within the local area. The proposed David I. Siegel Adult Day Care Center operation would expand the firm's service platform within Flagler County while preserving a local focus and strengthening access to adult day care, caregiver respite, therapeutic programming, and dementia-informed services for area residents.

G. Present Status and Projected Direction of the Business

Therapeutic Assisted Living Corp. is an active senior-care organization positioned for measured growth. The firm's present direction is to expand from its existing residential assisted living experience into broader community-based senior services through operation of the David I. Siegel Adult Day Care Center. The organization is also an active Florida Medicaid provider and currently maintains managed-care relationships with Sunshine Health, Florida Community Care, UnitedHealthcare, and Humana, providing an established foundation for payer-network continuity and third-party reimbursement development for the proposed program. The projected direction includes development of a sustainable adult day care program supported by private-pay revenue, Medicaid and other third-party reimbursement, applicable public program referrals, community partnerships, and disciplined cost management. Therapeutic Assisted Living Corp. has executed a workforce-development agreement with CareerSource Brevard Flagler Volusia and is actively participating in CareerSource workforce-development programs. These workforce resources include On-the-Job Training (OJT), Employ Florida recruitment, NextGen/Young Adult internship opportunities, and veteran-focused employment opportunities available through CareerSource. Therapeutic Assisted Living Corp. intends to use these established workforce resources to create additional local job opportunities, recruit and train Flagler County residents, support veterans seeking employment, develop healthcare career pathways, and contribute to continued community and economic development in Flagler County.

H. Overall Qualifications of the Business

Therapeutic Assisted Living Corp. offers a combination of local presence, licensed senior-care operations, healthcare experience, compliance knowledge, therapeutic programming experience, and hands-on administration that is directly relevant to the scope of this RFP. The organization has experience with activities of daily living support, medication-related services within licensed scope, nutrition and meal service, dementia and Alzheimer's-related care, family and provider communication, staffing oversight, emergency preparedness, documentation, quality assurance, and AHCA compliance. Therapeutic Assisted Living Corp. has maintained a deficiency-free ALF survey record from opening through the present, providing a demonstrated record of consistent regulatory performance. Therapeutic Assisted Living Corp. also holds a Limited Mental Health (LMH) specialty license for its assisted living operation. This specialty licensure requires additional mental-health-related training and compliance responsibilities and strengthens the organization's experience supporting individuals with mental health needs within the permitted scope of Florida assisted living services. The LMH specialty complements the organization's dementia-informed, person-centered approach and demonstrates additional regulatory and staff-training capacity relevant to vulnerable adult populations. Therapeutic Assisted Living Corp. has also earned five-star Google reviews from residents, families, and community stakeholders, reflecting positive experiences with the organization's quality of care, cleanliness, communication, compassion, and home-like environment. Supporting five-star Google review documentation and letters of recommendation are provided in the Past Performance / References section of the response. Therapeutic Assisted Living Corp. is also an active Florida Medicaid provider and currently has contractual relationships with Sunshine Health, Florida Community Care, UnitedHealthcare, and Humana. These payer relationships are directly relevant to the County's Medicaid managed-care continuity requirements and strengthen the firm's readiness to support credentialing, billing, and reimbursement processes for eligible adult day care participants. Management is familiar with Florida healthcare licensing expectations and the importance of maintaining accurate records, trained personnel, safe operations, and person-centered plans of care. The organization's small, locally managed structure supports responsive oversight and direct accountability. The firm also has access to documented working capital, financing capacity, insurance support, and workforce-development resources to support transition and operations. The firm's identified project personnel are Flagler County residents, and Therapeutic Assisted Living Corp.'s executed CareerSource workforce-development agreement further strengthens its ability to recruit, train, and retain local workers as program census grows. Therapeutic Assisted Living Corp. is prepared to operate the Center as a self-sustaining business unit and understands that Flagler County will not provide direct operating subsidies.

I. Qualifications of Employees Assigned to the Contract

The proposed team combines administration, healthcare, direct-care, marketing, community outreach, and support experience. All personnel identified in this proposal are local Flagler County residents, reinforcing Therapeutic Assisted Living Corp.'s commitment to maintaining employment, healthcare expertise, and economic participation within the community it serves. LaTasha Rowell will provide executive and administrative oversight and brings extensive healthcare experience, assisted living administration, rehabilitation and direct-care background, regulatory knowledge, staff supervision, quality assurance, and community relationship management. She also currently holds an active Physical Therapist Assistant license, adding clinical knowledge of functional mobility, therapeutic activity, rehabilitation principles, safety, and support for maintaining independence. This credential strengthens the proposed team's therapeutic perspective without representing that physical therapy services will be furnished outside the applicable scope, referral, or supervision requirements. Treyvian Williams currently holds a full-time position with Therapeutic Assisted Living Corp. and brings administrative and Certified Nursing Assistant credentials to the proposed team. Deon Nelson is included as direct-care staff and holds Certified Nursing Assistant credentials, CPR certification, and experience supporting residents with daily care, activities, meals, housekeeping, safety, and family communication. Deon is also currently enrolled in nursing studies at Daytona State College, demonstrating continued professional development within the healthcare workforce. Donald Rowell is included in the proposal team with administrative credentials and current healthcare marketing experience. He currently

provides marketing and community-outreach support for Grand Oaks and for an Aviata healthcare facility in the Daytona, Florida area. His experience includes relationship development, referral-source outreach, healthcare marketing, and community visibility, which will support participant census development and community engagement for the David I. Siegel Adult Day Care Center. Additional licensed nursing personnel, including RN/LPN coverage, will be utilized in accordance with the RFP, AHCA requirements, participant needs, and census. Resumes, licenses, and applicable certifications for proposed personnel are included in the Firm/Employee Qualifications section of the proposal. Any newly hired positions required for the project will be recruited based on documented job descriptions and required qualifications, with an emphasis on local Flagler County recruitment through Therapeutic Assisted Living Corp.'s active CareerSource workforce-development partnership.

J. Lawsuits, Contract Non-Performance, and Failure to Complete Work

Therapeutic Assisted Living Corp., its officers, proposed team members, and subconsultants have not been involved in any lawsuits related to company contracts or other company business during the preceding five (5) years. In addition, Therapeutic Assisted Living Corp., its officers, proposed team members, and subconsultants have not failed to complete any contract during the preceding five (5) years, and no officer or partner of the proposed team has failed to complete a contract handled in his or her name during that period.

Closing Statement

Therapeutic Assisted Living Corp. appreciates the opportunity to submit its qualifications to Flagler County. The firm is committed to maintaining continuity of care at the David I. Siegel Adult Day Care Center, creating local employment opportunities, supporting caregivers and participants, and operating the program with the professionalism, fiscal accountability, regulatory discipline, and community-centered service required for long-term sustainability. We welcome the opportunity to serve Flagler County through this important community resource.

Respectfully submitted,

LaTasha Rowell, Administrator 8/22/2026.

LaTasha Rowell
Owner/Administrator
Therapeutic Assisted Living Corp.

LATASHA ROWELL

Owner & Administrator | Assisted Living Operations | Physical Therapist Assistant | Healthcare & Rehabilitation

Palm Coast, Florida 32137 | 904-501-8991 | latashagilyard@gmail.com

PROFESSIONAL SUMMARY

Experienced healthcare professional, Assisted Living Facility Administrator, business owner, and Physical Therapist Assistant with more than 20 years of progressive experience spanning direct patient care, rehabilitation, home health, clinical coordination, assisted living administration, and healthcare business operations. Owner and Administrator of Therapeutic Assisted Living Corp. since 2020, with documented training in Alzheimer's disease and related disorders, assisted living administration, Extended Congregate Care, Limited Mental Health, rehabilitation, resident safety, and person-centered support. Combines hands-on clinical experience with healthcare administration and business leadership to promote individualized care, therapeutic engagement, dignity, independence, safety, and whole-person well-being.

CORE COMPETENCIES

- Assisted Living Administration
- Healthcare Operations Management
- Resident-Centered Care
- Alzheimer's & Dementia Care
- Physical Therapy & Rehabilitation
- Therapeutic Exercise & Activities
- Activities of Daily Living
- Patient & Caregiver Education
- Staff Leadership & Supervision
- Regulatory Compliance
- AHCA/F.A.C. Compliance
- Quality Assurance
- Resident Advocacy
- Family & Community Relations
- Interdisciplinary Collaboration
- Medication Assistance Oversight
- Documentation & Record Management
- Emergency & Disaster Preparedness
- Infection Prevention & Safety
- Behavioral & Psychosocial Support
- Business Development
- Marketing & Networking
- Billing & Payroll
- Vendor Coordination
- Community Partnerships
- Government & Community Engagement

PROFESSIONAL EXPERIENCE

THERAPEUTIC ASSISTED LIVING CORP. — Palm Coast, Florida

OWNER, LIAISON & ADMINISTRATOR | 2020 – Present

- Provide executive leadership and operational oversight for a Florida-licensed assisted living organization focused on therapeutic engagement, compassionate care, resident dignity, safety, and whole-person well-being.
- Direct daily operations including resident services, staffing, scheduling, workflow, supplies, inventory, billing, payroll entry, accounts, appointments, documentation, customer service, and vendor coordination.
- Develop and implement policies, procedures, forms, training systems, emergency preparedness processes, visitation procedures, medication-assistance documentation, and quality-assurance practices.
- Maintain working knowledge of Florida assisted living regulations and Agency for Health Care Administration requirements, including specialized Extended Congregate Care and Limited Mental Health policies and procedures.
- Lead individualized resident-centered care and advocate for safety, dignity, independence, functional ability, and quality of life.

- Coordinate with physicians, nurses, therapists, hospice providers, families, caregivers, pharmacies, and other third-party service providers.
- Apply rehabilitation knowledge to mobility, positioning, functional independence, fall prevention, activities of daily living, and safe care practices.
- Recruit, orient, train, supervise, schedule, coach, and support staff while promoting accountability, professionalism, compassion, and teamwork.
- Develop marketing and networking strategies to maintain and increase census; build relationships with families, healthcare professionals, community organizations, and service providers.
- Represent Therapeutic Assisted Living in community and governmental discussions regarding senior care, adult day services, and community-based programs.
- Maintain professional involvement with the Florida Assisted Living Association.

PALM GARDEN REHABILITATION OF GAINESVILLE — Gainesville, Florida

PHYSICAL THERAPIST ASSISTANT | 2017 – 2021

- Provided physical therapy services across outpatient rehabilitation, inpatient rehabilitation, and home health settings under the direction of the supervising Physical Therapist.
- Performed therapeutic exercise, therapeutic activities, functional training, physical agents, modalities, mobility interventions, and patient/caregiver education.
- Monitored patient response to treatment and communicated favorable or unfavorable reactions to the supervising therapist.
- Supervised rehabilitation assistants and supported effective clinical workflow.
- Maintained accurate and timely documentation using Casamba and Rehab Optima; participated in weekly case conferences.
- Maintained equipment sanitation, patient safety, productivity, and ethical/legal standards.

TERRACE HEALTH & REHABILITATION — Gainesville, Florida

PHYSICAL THERAPIST ASSISTANT | 2015 – 2017

- Provided physical therapy treatments under the direction of the supervising Physical Therapist.
- Performed therapeutic exercises, therapeutic activities, functional mobility interventions, patient education, and safety training.
- Monitored patient response, communicated changes, supervised rehabilitation assistants, maintained documentation, and participated in case conferences.
- Maintained equipment sanitation, productivity, and professional standards.

SELECT REHAB — Palatka, Florida

PHYSICAL THERAPIST ASSISTANT — PRN | 2015 – Present

- Provide therapy services under the direction of the supervising Physical Therapist, including therapeutic exercise, functional activities, mobility training, and patient education.
- Monitor patient response, support rehabilitation team coordination, maintain documentation, participate in case conferences, and maintain safety and sanitation standards.
- Licensure status: Currently non-active.

SELF-EMPLOYED — Palatka, Florida

HOME HEALTH AIDE / CAREGIVER | 2013 – 2015

- Provided individualized private-duty care in home settings, including ADLs, personal hygiene, dressing, wheelchair and bed mobility, transfers, positioning, passive range of motion, vital-sign monitoring, skin-integrity checks, and caregiver education.
- Assisted with self-administered medications within the appropriate scope and promoted safety, comfort, dignity, and independence.

COMMUNITY HOME HEALTH — St. Augustine, Florida
CLINICAL INTAKE COORDINATOR* | *2010 – 2013

- Coordinated intake activities for new home-health admissions; verified insurance and assembled medical records.
- Performed accurate data entry, managed office and medical supplies, responded to multi-line telephone needs, and participated in clinician case conferences.
- Used Microsoft Word, Excel, PowerPoint, email, Internet, and office technology.

COMMUNITY HOME HEALTH — St. Augustine, Florida
CLINICAL TEAM ASSISTANT* | *2008 – 2010

- Supported the clinical team under the clinical nurse supervisor; maintained patient tracking logs and organized physician orders.
- Performed accurate payroll entry, maintained filing systems and documentation, and supported daily clinical workflow.

CERTIFIED NURSING ASSISTANT / PRIVATE DUTY CAREGIVER
1999 – 2015

- Provided direct patient care including bathing, toileting, dressing, transfers, mobility, personal care, vital-sign monitoring, and daily skin checks.
- Reported changes in condition and promoted dignity, safety, comfort, and independence.

EDUCATION

KEISER UNIVERSITY — Jacksonville, Florida
Associate Degree — Physical Therapist Assistant* | *2015

MY ALF TRAINING
Assisted Living & Long-Term Care Training; Marketing Consulting Training* | *2019

FIRST COAST TECHNICAL COLLEGE — Palatka, Florida
Certificate — Medical Administrative Assistant* | *2006

ST. JOHNS COMMUNITY COLLEGE — Palatka, Florida
Certificate — Certified Nursing Assistant* | *1999

PROFESSIONAL CERTIFICATIONS & SPECIALIZED TRAINING

- Assisted Living Facility Administrator Certification
- Assisted Living Core Competency Certification
- Alzheimer's Disease & Related Disorders Training — FL 3-Hour Initial Training, Part 1 | 3 Credit Hours | Completed November 21, 2023 | Department of Elder Affairs approved
- Alzheimer's Disease Level 1 | 4 Credit Hours | Completed March 24, 2025 | Department of Elder Affairs approved
- Extended Congregate Care (ECC) Specialty Training
- Limited Mental Health (LMH) Specialty Training
- Certified Nursing Assistant (CNA)
- Physical Therapist Assistant — Clinical & Professional Training
- CPR
- HIPAA
- OSHA Bloodborne Pathogens
- HIV Training
- Assisted Living & Long-Term Care Training

- Alzheimer's/dementia subject matter: behavior management and challenging behaviors; promoting independence with ADLs; dressing, grooming, eating, bathing and toileting; family support and involvement; resident activities; appropriate physical environment; security and safety; routines and schedules; ethics, autonomy, and person-centered care.
- Additional continuing education in resident safety, infection prevention, documentation, communication, caregiver education, functional mobility, fall prevention, therapeutic engagement, and quality care practices.

BUSINESS RECOGNITION & COMMUNITY DISTINCTIONS

- 2024 - Best Business Rated, Palm Coast, Florida - Therapeutic Assisted Living Corp.
- 2026 - Top 3 Business Rated, Palm Coast, Florida - Therapeutic Assisted Living Corp.
- 2026 - Selected for inclusion as a Top Health Executive by Global Who's Who Online, recognizing Latasha Rowell in her role as ALF Administrator of Therapeutic Assisted Living Corp.
- 2026 - Therapeutic Assisted Living Corp. identified for inclusion as a Top Health Service Organization representing Palm Coast, Florida by Global Who's Who Online.
- Maintains strong five-star resident, family, and customer feedback reflecting a commitment to compassionate service, quality care, and positive community relationships.

PROFESSIONAL & COMMUNITY LEADERSHIP

- Florida Assisted Living Association — Active membership and professional participation.

PROFESSIONAL VALUE PROPOSITION

Latasha Rowell brings an uncommon combination of clinical care experience, rehabilitation expertise, healthcare administration, business ownership, and community leadership. Her progression from Certified Nursing Assistant to medical administration, home health, Physical Therapist Assistant, and ultimately Owner/Administrator demonstrates both front-line healthcare knowledge and executive operational leadership. This combination supports strong oversight of regulated healthcare services, staff, resident and family relations, quality assurance, compliance, community partnerships, and government/community programs.

REFERENCES

Available upon request.

Treyvian Artrez Williams

Palm Coast, Florida
386-264-3716 • Trey21154@gmail.com

PROFESSIONAL SUMMARY

Dedicated Assisted Living Facility Administrator with hands-on experience managing daily operations, supervising staff, and providing compassionate resident-centered care in a therapeutic assisted living environment. Skilled in resident care coordination, medication management oversight, staff leadership, and maintaining compliance with Florida assisted living regulations. Strong background in elderly care with years of experience working within assisted living facilities and supporting residents' health, safety, and quality of life.

LICENSES & CERTIFICATIONS

- Florida Assisted Living Facility Administrator License
- Certified Nursing Assistant (CNA) License
- Medication Technician (Med Tech) License

PROFESSIONAL EXPERIENCE

Administrator — Therapeutic Assisted Living

Palm Coast, Florida | 2022 – Present

- Manage daily operations of a therapeutic assisted living facility serving 6 residents
- Supervise and lead a team of 4 employees to ensure quality resident care
- Coordinate resident care plans, medication assistance oversight, and daily living support
- Maintain resident documentation, incident reports, and operational records
- Ensure compliance with Florida assisted living regulations and facility standards

- Communicate with residents' families, healthcare providers, pharmacies, and hospice staff
- Assist with staffing schedules, daily operations, and resident safety procedures
- Foster a compassionate and supportive environment focused on resident well-being and dignity

---

CORE SKILLS

- Assisted Living Administration
- Resident Care Coordination
- Staff Supervision & Leadership
- Medication Assistance Oversight
- Dementia & Elderly Care
- Florida ALF Compliance
- Resident Documentation
- Team Management
- Scheduling & Operations
- Family & Healthcare Communication
- Safety & Emergency Procedures
- Compassionate Patient Care

EDUCATION

High School Diploma

ADDITIONAL EXPERIENCE

Extensive background working in assisted living environments with experience supporting elderly residents, assisting with activities of daily living, and maintaining compassionate, high-quality care standards.

Certificate of Achievement

Conferred to:

Treyvian A. Williams

For obtaining a passing score on the

ASSISTED LIVING FACILITY CORE COMPETENCY TEST

Certification #: 171246268

Presented by

The MacDonald Research Institute Testing Office
10441 Quality Drive, Suite 206, Spring Hill, FL 34609

Kimberly Smoak

Kimberly Smoak, Deputy Secretary
for Health Quality Assurance
Agency for Health Care Administration

TMRI

The MacDonald Research Institute

December 5, 2025

Date

DON ROWELL

Palm Coast, FL | (386) 631-2282 | donrow007@icloud.com

PROFESSIONAL SUMMARY

Business development and relationship management leader with a demonstrated track record of driving census growth, executing facility turnarounds, and managing multi-site skilled nursing operations. Experienced in improving occupancy stability, expanding referral networks, and optimizing payer mix within post-acute healthcare environments.

Delivered measurable performance gains including increasing census from sub-60% to full occupancy, contributing to multi-million-dollar annualized facility revenue impact, and establishing sustainable referral pipelines across hospitals, physicians, case managers, and post-acute partners. Background in enterprise financial services account management and luxury automotive sales, reinforcing strengths in consultative selling, executive relationship development, and revenue generation.

CORE COMPETENCIES

- Regional Business Development Strategy
- Skilled Nursing Census Growth & Turnaround
- Healthcare Referral Network Development
- Revenue Growth & Payer Mix Optimization
- Multi-Site Operations & Performance Management
- Hospital & Post-Acute Relationship Management
- Consultative & Solution-Based Selling
- Contract Negotiation & Account Retention
- Executive & C-Suite Relationship Management
- Financial Services & Enterprise Account Growth

PROFESSIONAL EXPERIENCE

Aviata Health Group

Healthcare Liaison / Business Development | 2023 – Present

Drive census growth strategy and business development across two skilled nursing facilities totaling 180 beds, with direct responsibility for occupancy performance, referral development, and revenue stabilization.

- Led full census turnaround in a 120-bed facility, increasing occupancy from **58% to 100% within 4 months** through aggressive referral development and market expansion initiatives.
- Contributed to **$26M+ annualized facility revenue impact (estimated based on census performance and payer mix optimization)** through sustained occupancy growth and admissions strategy execution.
- Stabilized census across multi-site operations, improving occupancy consistency and long-term financial predictability.
- Expanded referral pipeline through strategic relationships with hospitals, physicians, case managers, discharge planners, and assisted living communities.
- Strengthened Medicare and Managed Medicare skilled mix to improve reimbursement quality and overall payer performance.
- Served as primary liaison between referral sources, families, clinical teams, and admissions departments to ensure appropriate placement and smooth transitions of care.
- Executed targeted market outreach, presentations, and partnership development initiatives to increase facility visibility and admissions flow.
- Partnered with clinical leadership to align patient flow, level-of-care decisions, and admission appropriateness criteria.

Mercedes-Benz of Daytona Beach

Luxury Automotive Sales Consultant | 2017– 2023

Delivered high-volume, consultative luxury vehicle sales in a performance-driven dealership environment focused on customer experience, retention, and revenue growth.

- Averaged **17 vehicle sales per month**, consistently ranking among top-performing sales consultants.
- Recognized as **Salesperson of the Month** for performance excellence and customer satisfaction.
- Managed full-cycle luxury sales process from prospecting and qualification through negotiation and closing.
- Built a strong referral-based pipeline through long-term client relationships and repeat business development.
- Partnered with finance and management teams to ensure seamless transaction execution and customer experience delivery.

First Data Corporation (now Fiserv)

Mid-Market Relationship Manager | 2010–2016

Managed a portfolio of mid-market business clients providing payment processing and financial technology solutions, focusing on retention, expansion revenue, and strategic account growth.

- Managed **150+ mid-market client portfolio generating $55M+ annual recurring revenue**.
- Increased portfolio revenue by **18% year-over-year** through strategic account planning and solution expansion.
- Maintained **90%+ client retention rate** through proactive relationship management and issue resolution.
- Served as trusted advisor to business owners and C-suite executives on payment infrastructure optimization and operational efficiency.
- Conducted quarterly business reviews to identify growth opportunities, cost savings, and system enhancements.
- Recognized as a top regional performer for revenue growth and client satisfaction metrics.

CAREER HIGHLIGHTS

- Increased skilled nursing occupancy from **58% → 100% in 4 months**
- Managed **180-bed multi-site healthcare operations portfolio**
- Generated **$26M+ annualized facility revenue impact (estimated)**
- Oversaw **$55M+ annual recurring revenue portfolio (Fiserv)**
- Consistently delivered **17+ luxury vehicle sales/month average**
- Achieved **18% YoY revenue growth in financial services portfolio**

Military Service

- **U.S. Army Sergeant (E-5) – Honorably Discharged**
- **Tactical Microwave/Satellite Systems Operator**
- **Personnel Administrative Specialist**

AGENCY FOR HEALTH CARE ADMINISTRATION

ASSISTED LIVING FACILITY
CORE TRAINING PROGRAM CERTIFICATION

Donald Rowell

Certification #: 171244476 Issued: July 15, 2023

The person named herein has successfully completed the Assisted Living Facility Core Training Program and has met the requirement of Florida Statute 429.52(3).

TMRI
The MacDonald Research Institute

MQA Online Services

Logged in as ***Rowell, Latasha Dion***

Update Account | Logoff | Contact Us

My Dashboard

Don't Delay, Get Screened today!

Effective July 1, 2025, HB 975 requires that all health care practitioners undergo a fingerprint-based background screening as a requirement for obtaining licensure. If you are renewing your license with the Department, you must have a screening completed for your renewal application to be processed. For detailed information, including frequently asked questions, visit https://flhealthsource.gov/backgroundscreening/. Exceptions to this requirement: Emergency Medical Technician, Paramedic, Radiological Technician, Pharmacy Interns, and Registered Pharmacy Technicians.

Important information about your dashboard:

- To download a copy of your e-License, please navigate to the **"Licensure Documents"** menu located within the **"Additional Activities"** section below.
- When your profession opens for renewal a **"Renew My License"** option will become available no later than 90 days prior to your license expiration date. If you do not see the **"Renew My License"** option, please check back later.
- If you are trying to **reactivate from an inactive or a retired status**, this cannot be completed online unless you are eligible to reactivate your inactive license during a public health emergency pursuant to s. 381.00315(1)(c)3., Florida Statutes. Please contact your board office for more information.
- If your profession is not in renewal and you need a duplicate license, to request a name change or perform any other license maintenance activity, please choose your option under **"Manage My License"**.
- If you have not yet added your license to your account, you can do this by selecting the **"Add My License or Previous Application"** option under the **"Additional Activities"** section below.

To begin, choose an option then hit the **"Select"** button. You will return to this dashboard after you have finished.

License Information Hide Details

License Number:	**#26036**
License Type:	**Physical Therapist Assistant**
License Status:	**Clear**
License Expiry:	**11/30/2027**
Address:	**25 LYNDENHURST LN PALM COAST FL 32137**
Phone:	**904-501-8991**

Manage My License

Physical Therapist Assistant #26036 | Choose an Application | Select

My Application

To start a new application or resume a previously saved application.

CERTIFICATE of ACHIEVEMENT

Conferred to:

Latasha D. Gilyard

For obtaining a passing score on the

ASSISTED LIVING FACILITY CORE COMPETENCY TEST

Certification #: ***171241826***

Presented by

The MacDonald Research Institute Testing Office
28953 SR 54, Wesley Chapel, FL 33543

TMRI

The MacDonald Research Institute

Mary C. Mayhew, Secretary
Agency for Health Care Administration

December 14, 2019

Date

DEON NELSON

Palm Coast, FL 32164

deonnelson386@gmail.com | (386) 882-7543

PROFESSIONAL SUMMARY

Dedicated and compassionate Certified Nursing Assistant (CNA) and CPR-certified professional with hands-on experience in assisted living and healthcare support settings. Skilled in providing direct patient care, assisting with activities of daily living, monitoring resident conditions, and supporting clinical care teams. Strong commitment to patient safety, dignity, comfort, and quality care. Dependable team member with effective communication skills and the ability to work in fast-paced healthcare environments. Trained in dementia and Alzheimer's care support, with a focus on patient-centered communication and behavioral understanding.

PROFESSIONAL EXPERIENCE

Certified Nursing Assistant

Therapeutic Assisted Living Corp. — Palm Coast, FL

November 2024 – Present

- Provide direct patient care to residents, including assistance with activities of daily living (ADLs) such as bathing, dressing, grooming, toileting, and mobility support.
- Support residents with dementia and Alzheimer's disease, using calm communication techniques, redirection strategies, and patient-centered care approaches.
- Monitor and support resident health status by observing and reporting changes in condition, behavior, or vital signs to appropriate clinical staff.

- Assist with patient safety measures, including fall prevention, proper transfers, and maintaining a safe care environment.
- Support individualized care plans while ensuring resident dignity, comfort, and emotional well-being.
- Assist with feeding and hydration support while following dietary needs and care instructions.
- Maintain infection control standards, sanitation procedures, and proper use of personal protective equipment (PPE).
- Communicate effectively with nurses, healthcare staff, residents, and families regarding patient needs and care updates.
- Document and report care activities in accordance with facility policies and healthcare guidelines.
- Contribute to a collaborative care team focused on delivering consistent, high-quality patient care.

Pharmacy Staff

One Pharmacy — Palm Coast, FL

August 2024 – Present

- Support healthcare operations in a pharmacy setting by assisting staff with daily workflow and patient service needs.
- Provide professional and respectful communication with patients regarding service-related inquiries.
- Maintain strict confidentiality and compliance with healthcare privacy standards (HIPAA).
- Assist with organizing medications, supplies, and maintaining an efficient clinical workspace.
- Support accurate handling of healthcare-related information under supervision.

- Contribute to a clean, organized, and safety-focused healthcare environment.
- Demonstrate attention to detail, reliability, and professionalism in a clinical support role.

Crew Member

Willie & Cathy's Mobile Detailing — Palatka, FL

June 2021 – August 2023

- Performed detailed cleaning and sanitation of vehicles and recreational units.
- Assisted with maintaining organized and safe work environments.
- Supported team operations to meet service quality and efficiency standards.
- Provided customer service and ensured client satisfaction during service completion.

EDUCATION

Daytona State College Nursing Student

Palm Coast, FL

Perquisites College Coursework

High School Diploma / GED

CERTIFICATIONS & LICENSES

- Certified Nursing Assistant (CNA)
- CPR Certified
- Valid Driver’s License

Medication Technician

CORE SKILLS

- Direct Patient Care (ADLs)
- Dementia & Alzheimer’s Care Support
- Resident Safety & Monitoring
- Behavioral Redirection & De-escalation Techniques
- Vital Signs Observation & Reporting
- Infection Control & PPE Use
- Care Plan Support
- Mobility & Transfer Assistance
- Compassionate Patient Care
- Healthcare Communication
- HIPAA Compliance & Confidentiality
- Team-Based Clinical Support
- Time Management & Reliability
- Attention to Detail
- Pharmacy & Healthcare Environment Support
- Customer & Patient Interaction

85 Cypress Point Parkway, Unit B | Palm Coast, Florida 32164
Tel: 386-447-8944 | joseph@one-pharmacy.com

June 19, 2026

Flagler County Board of Commissioners

Flagler County Administration

Bunnell, Florida 32110

RE: Letter of Support — Latasha Rowell, Administrator, Therapeutic Assisted Living Corp.

To Whom It May Concern:

It is without reservation and with the highest degree of professional confidence that I submit this letter in full support of Mrs. Latasha Rowell, Administrator of Therapeutic Assisted Living Corp., in her application for the Adult Day Care Center through the Flagler County public private partnership initiative. My recommendation reflects direct, firsthand experience earned through our collaborative work serving the senior population of Palm Coast and the surrounding community.

As the pharmacist and owner of One Pharmacy, I have had the privilege of working closely with Mrs. Rowell and her team at Therapeutic Assisted Living over an extended period. Our partnership has centered on one core value service with care: ensuring that every resident under her care receives safe, appropriate, and timely medication management. In my role, I have observed Mrs. Rowell not simply as an administrator, but as a genuine patient advocate who holds herself and her staff to the highest standards of care.

What sets Mrs. Rowell apart is not only her operational excellence, but the culture she has built within her homes. Her facilities are impeccably maintained ,among the most well kept I have encountered in my professional career. Residents medication management is well above CMS standards and compliance rates, an outcome that is not easy to achieve. It reflects Mrs. Rowell's consistent responsiveness, organization hierarchy, and proactive communication with our pharmacy team are the qualities that are essential for companies within this space.

Beyond the operational, Mrs. Rowell is a pillar of this community. She is known for her integrity, her warmth, and her genuine commitment to the quality of life and care of the seniors within her homes.

The working relationship we have built is founded on trust, and in healthcare, trust must be earned. Mrs. Rowell has earned it fully.

It is my firm belief that the attributes that have made Therapeutic Assisted Living a model facility will translate directly into the Adult Day Care Center. Her experience in programming for seniors, her understanding of regulatory requirements, and her track record of community partnership make her exceptionally qualified for this opportunity. The Palm Coast community would benefit enormously from the care and intentionality she will bring to this venture.

On behalf of the practitioner community we represent, I offer Mrs. Latasha Rowell the strongest possible recommendation. I am confident she will serve Flagler County with the same distinction she has demonstrated in every aspect of her work to date.

Please do not hesitate to contact me directly at 386-447-8944 or joseph@one-pharmacy.com should you require any additional information or wish to speak further about my experience with Mrs. Rowell.

Respectfully,

Dr. Joseph Shoyoye, PharmD
CEO & Pharmacy Owner
One Pharmacy
85 Cypress Point Parkway, Unit B
Palm Coast, Florida 32164
Tel: 386-447-8944
joseph@one-pharmacy.com

Representative Project No. 1

Project Title: Therapeutic Assisted Living Corp. – Senior Care Operations Including Adult Day Services
Location: Palm Coast, Florida
Owner/Operator: Therapeutic Assisted Living Corp.
Address: 25 Lyndenhurst Lane, Palm Coast, Florida 32137
Years Performed: 2020 – Present
Status: Ongoing
Project Cost: Privately funded ongoing senior-care operation

Brief Description

Therapeutic Assisted Living Corp. has continuously operated a licensed senior-care facility in Palm Coast, Florida since 2020. TAL is responsible for administration, staffing, supervision, therapeutic and recreational programming, meals and nutrition, medication assistance and coordination, family communication, healthcare-provider collaboration, emergency preparedness, regulatory compliance, quality assurance, and overall facility operations.

In addition to residential assisted living services, TAL has **direct experience providing adult day services to a nonresident participant within its licensed assisted living setting**. The participant attended during daytime hours and received supervision, meals, socialization, therapeutic and recreational activities, individualized support, family communication, and health-and-safety oversight alongside TAL's long-term residents.

Due to the size and capacity of TAL's residential operation, adult day participation was intentionally limited based upon available space, staffing, and the needs of existing residents.

Relevance to the David I. Siegel Adult Day Care Center

This project is directly relevant because TAL has practical experience providing both residential senior care and daytime services to a nonresident adult.

The experience required TAL to address many of the same fundamental responsibilities involved in dedicated adult day care operations, including:

- Participant supervision and safety;
- Daytime programming;
- Social and therapeutic engagement;
- Dementia and mental-health-related support;
- Nutrition and meal services;
- Family caregiver communication;
- Individualized assistance;
- Health monitoring;
- Staffing and scheduling;

- Documentation;
- Healthcare-provider coordination; and
- Continuity of care.

TAL does not represent that it has previously operated a separately licensed stand-alone adult day care center. The David I. Siegel Adult Day Care Center would represent an expansion of TAL's existing senior-care and adult day-services experience into a dedicated adult day care environment with greater participant capacity and community reach.

TAL will operate the Center in accordance with all licensing, staffing, programmatic, physical plant, safety, and regulatory requirements applicable to the facility.

gentiva
HOSPICE

06/17/2026

To Whom It May Concern,

I am pleased to provide this letter of recommendation for Therapeutic Assisted Living. It has been my privilege to collaborate professionally with the leadership and care team at this facility, and I have consistently been impressed by their commitment to excellence, compassion, and resident-centered care.

Throughout our professional collaboration, the staff at Therapeutic Assisted Living have demonstrated exceptional dedication to maintaining a safe, supportive, and welcoming environment for residents. Their approach emphasizes dignity, respect, and individualized care, ensuring that each resident's physical, emotional, and social needs are addressed with professionalism and sensitivity.

In addition to providing high-quality care, the facility has proven to be an outstanding collaborative partner. Communication between staff, healthcare providers, families, and community organizations is consistently clear, timely, and effective. Their willingness to work cooperatively, share information appropriately, and coordinate services contributes significantly to positive outcomes for residents and their families.

The leadership team fosters a culture of accountability, continuous improvement, and teamwork. During our professional interactions, I have found them to be responsive, knowledgeable, and committed to maintaining the highest standards of care and ethical practice. Their collaborative spirit makes them a trusted and valued partner within the healthcare and senior services community.

I confidently recommend Therapeutic Assisted Living to families seeking quality assisted living services and to organizations seeking a professional, reliable, and collaborative partner. I am confident that they will continue to provide exceptional care and maintain the strong professional relationships that have earned them an excellent reputation.

Sincerely,

Colleen Marino
Executive Director
Gentiva Hospice
386-597-6306
Colleen.Marino@gentivahs.com

REFERENCES

Agency #1	Gentiva Hospice
Address	145 City Pl Unit 200A
City, State, ZIP	Palm Coast FL. 32164
Contact Person	Colleen Marino
E-mail	Colleen.Marino@gentivahs.com Phone: 386-597-6306
Date(s) of Service	2020 – Currently serving Gentiva's patients.
Type of Service	Interdisciplinary senior-care coordination, hospice collaboration, family communication, and continuity of care.
Comments:	Professional healthcare partner familiar with T.A.L.'s senior-care operations, staff communication, quality standards, family coordination and collaborative care practices.
Agency #2	One Pharmacy.
Address	88 Cypress Point Parkway, Unit B
City, State, ZIP	Palm Coast, FL 32164
Contact Person	Dr. Joseph Shoyoye, PharmD, Owner
E-mail	joseph@onepharmacy.com Phone: 386-447-9844
Date(s) of Service	2021 – current
Type of Service	Pharmacy services, medication-management coordination, and healthcare collaboration
Comments:	Professional pharmacy partner familiar with T.A.L.'s medication management practices, communication, resident-care standards, compliance awareness, and overall professionalism.
Agency #3	Aviata at Grand Oaks
Address	3001 Palm Coast pkwy SE
City, State, ZIP	Palm Coast FL. 32137
Contact Person	Christofer McNair, AII
E-mail	cmcnair@aviatang.com Phone: (386)442-6060
Date(s) of Service	2020 – Present
Type of Service	Senior-care collaboration, rehabilitation partner familiar with T.A.L.'s collaborative approach, communication, resident advocacy, professionalism, and continuity of care practices.
Comments:	collaboration with rehabilitation and transitions of care.

8/14/2026

To whom it may concern

My family has had the pleasure of working with Therapeutic Assisted Living regarding the care of our mother Susanne Clark. Our mother has been residing at Therapeutic Assisted Living for the past 5 1/2 months.

My mother's journey began 3 years ago with numerous falls that resulted in her breaking her arm 3 times requiring the placement of hardware with three surgeries and a fourth surgery because of developing cellulitis . She went from independent living and walking 4 miles a day to needing care with her activities of daily living,mobility and decision-making . She could no longer live at her home alone .

After numerous stays in a rehab facility to strengthen her arm and regain some mobility with assistance, she transferred to a large assisted living facility . As you can imagine, she became angry with her situation and was not happy with her living arrangements.

She continued to fall requiring hospitalization and ER visits for head lacerations, arm lacerations and concussions. During these many hospital visits and rehab stays my mother experienced episodes of humiliation and lack of empathy from caregivers who should know better. I've been a nurse for 25 years and I've never treated people the way I've seen my mother treated. Our elder population should be treated with dignity and respect.

As a family we tried to never leave my mother for any extended period of time over 24 hours. A simple task of cutting up her food and making sure she had clean and dry clothes seemed to be out of reach for some caregivers. We were constantly worried about her safety.She did not make good decisions and would try to do things for herself, which were not in her best interest and resulted in her falling and injuring herself.

This brings me to the present time. For the past 5 1/2 months that my mother has been living at Therapeutic Assisted Living she has been living her best life since her first fall .She is treated with respect and dignity. She has supervised activities that have helped her regain her strength and limited mobility. Mom actually enjoys the activities,she would not participate in any of them at the large assisted living. The small setting and encouragement she receives on a daily basis has made a world of difference.

Mom does suffer from dementia and sundowners has been a real issue with her. I have seen her change from being angry at the sundowner time to actually being more relaxed and engaging with the staff and other residents during her hardest times. It is a big change for her. The staff gives so much support during the difficult times they know how to redirect and my mother's angry episodes have not been in evidence for the past couple of months.

We are now able to have conversations again with mom she is not falling and suffering from concussions.She has not fallen in the 5 1/2 months that she has been in the care of Therapeutic Assisted Living.

The supervision she receives the guidance and loving care from the staff has changed her attitude from an angry,humiliated woman back to the mother that we always knew.
Mom actually participates with the other residents with exercises and games that help to maintain her physical strength and abilities.
Mom now has nutritious meals and snacks throughout the day with her food prepared and served in portions that she can eat and maintain good nutrition.The family style meals and sitting at a table with 4 to 5 other residents has increased her socialization and has actually instilled pride in the fact that she can encourage others to eat. When my mother was living at the large assisted living facility, she insisted on eating alone, so this is such a huge improvement.
We never have to worry as a family that mom has not received good hygiene, clean clothes and that her overall health and safety needs are not being met.
This summer has been the first summer in three years that we have been able to leave mom for a couple weeks and enjoy a vacation. We know that she is in the best care possible while we have been away. The staff at Therapeutic Assisted Living consistently updates us with her overall health reports and pictures of mom enjoying life participating in exercises or just relaxing. This is a huge change from us going home after visiting mom at rehab and the large assisted living facility and sitting in front of a blank TV screen and saying "what are we going to do". ?
We as a family recommend Therapeutic Assisted Living to our friends in Palm Coast, so that they are aware of the loving and respectful care that is given at Therapeutic Assisted Living in case it is needed for their family member.
We are so thankful for all of the staff at Therapeutic Assisted Living,residents and family members are so totally embraced and made to feel at home. It is such a loving and caring environment that I wish every person in need of care could reside at Therapeutic Assisted Living.

Debra Foster (daughter of Susanne Penny Clark)
315-560-8234
8644 SW. 59th Ln., Road
Ocala, FL 34481

Debra Foster

AVIATA HEALTH GROUP

6/15/2026

To Whom It May Concern:

It is with great pleasure and sincere appreciation that I write this letter of recommendation for Mrs. LaTasha Rowell, Administrator of Therapeutic Assisted Living.

Over the course of our professional collaboration between Aviata at Grand Oaks, Skilled Nursing Facility and Therapeutic Assisted Living, I have had the opportunity to work directly with Mrs. Rowell and witness firsthand her unwavering commitment to excellence in resident care. Our organizations have maintained a strong and collaborative relationship centered on ensuring continuity of care and achieving the best possible outcomes for the individuals we serve.

Mrs. Rowell consistently demonstrates the highest standards of professionalism, compassion, and leadership. The level of service provided by Therapeutic Assisted Living reflects a culture of excellence that begins with her administration and extends throughout the organization. Her dedication to the well-being, dignity, and quality of life of each resident is evident in every interaction.

When residents from Therapeutic Assisted Living are admitted to Aviata at Grand Oaks for rehabilitation services, Ms. Rowell remains actively engaged in their care. She works closely with our interdisciplinary team, advocating tirelessly on behalf of her residents to ensure their needs are met and that care transitions are seamless. Her hands-on approach, strong communication skills, and resident-centered philosophy embody the true meaning of servitude and compassionate care.

Ms. Rowell possesses an exceptional bedside manner and leads with both empathy and integrity. She consistently places the interests of her residents first, demonstrating a level of advocacy that is both admirable and impactful. Her collaborative spirit fosters strong partnerships with healthcare providers and contributes significantly to positive resident outcomes.

Without reservation, I highly recommend Ms. LaTasha Rowell and Therapeutic Assisted Living. The professionalism, excellence, and dedication she brings to the healthcare community make her an invaluable leader and trusted partner in resident care.

Should you require any additional information, please do not hesitate to contact me.

Sincerely,

C. McNair

Christofer McNair, AIT
Aviata at Grand Oaks
386-446-6060
cmcnair@aviatahg.com

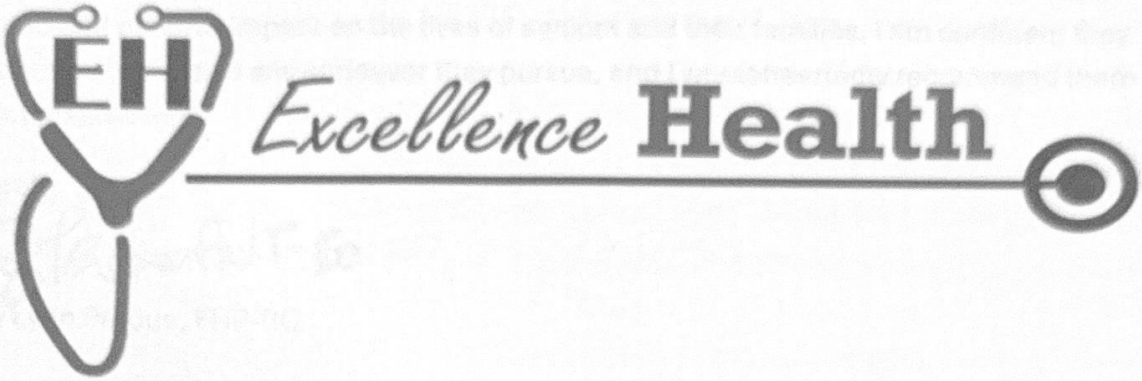

Cindy Perdue, FNP-NP

Excellence Health

1630 Mason Ave, Daytona Beach, FL 32117

8/21/26

To Whom It May Concern,

It is with great enthusiasm that I extend my recommendation for Therapeutic Assisted Living in favor of operation and management of an adult daycare facility. In my time working alongside them, I have witnessed their unwavering professionalism, exceptional leadership, and deep commitment to the well-being of our senior community.

Therapeutic Assisted Living consistently demonstrates excellence in every aspect of their role. They maintain strong, collaborative working relationships with Excellence Health and other healthcare partners, ensuring seamless continuity of care for each resident. Their dedication to advocating for seniors is evident in the personalized attention, respect, and dignity they extend to every individual under their care.

Their expertise in working with residents living with dementia and Alzheimer's disease is particularly commendable. They approach each situation with patience, empathy, and skill, creating an environment where residents feel safe, valued, and understood. This compassionate approach not only enhances quality of life but also fosters trust with families and caregivers.

In addition to their clinical and interpersonal strengths, Therapeutic Assisted Living upholds the highest standards of cleanliness, safety, and organization within the facility. Their attention to detail ensures that the environment remains welcoming, hygienic, and compliant with all safety regulations.

In summary Latasha Rowell is a dedicated, highly capable professional whose work has a profound and positive impact on the lives of seniors and their families. I am confident they will continue to excel in any endeavor they pursue, and I wholeheartedly recommend them without reservation.

Sincerely,

Cindy Lynn Perdue, FNP-BC

7.5 Project Approach

Overall Project Methodology

Therapeutic Assisted Living Corp. ("TAL") proposes a structured, participant-centered approach to the operation of the David I. Siegel Adult Day Care Center that prioritizes **continuity of care, safety, regulatory compliance, quality programming, family support, workforce development, community partnerships, census development, and long-term operational sustainability**.

TAL's approach is based upon its experience operating a regulated senior-care environment in Palm Coast and providing individualized services to older adults, including individuals living with Alzheimer's disease, dementia, mental-health conditions, physical limitations, and other age-related needs.

The objective is not simply to maintain the existing Adult Day Care Center. TAL intends to build upon its established role in the community and develop the Center into a dependable, welcoming, well-managed and highly visible resource for Flagler County seniors and the families who care for them.

TAL will implement the project through the following coordinated approach.

1. Organized Transition and Continuity of Services

Upon award, TAL will work collaboratively with Flagler County to establish an orderly transition plan designed to minimize disruption to existing participants, families, staff, service providers, and community partners.

Initial transition activities will include:

- Coordination with designated County representatives;
- Review of existing Center operations, policies, schedules, participant needs, and available records that may lawfully be transferred;
- Confirmation of all licensing and regulatory requirements applicable to operations;
- Facility and equipment assessment;
- Review of emergency preparedness and life-safety requirements;
- Development of staffing schedules and assignments;
- Confirmation of vendors and essential service providers;
- Participant and family communication;
- Development of enrollment and intake procedures;
- Implementation of required operational policies and documentation systems; and
- Establishment of quality-control benchmarks before full operation.

TAL will seek to preserve continuity wherever doing so remains appropriate while introducing improvements gradually and deliberately.

Participants and families should experience the transition as organized, respectful, and dependable.

2. Person-Centered Participant Care

TAL will operate the Center using a person-centered model that recognizes each participant as an individual with unique physical, cognitive, emotional, social, cultural, and functional needs.

Participant services will be based upon appropriate assessments, enrollment information, healthcare information, family input, physician or provider information when applicable, and ongoing observation.

Services may include, as appropriate:

- Supervision and safety monitoring;
- Assistance with permitted activities of daily living;
- Socialization and companionship;
- Cognitive stimulation;
- Therapeutic and recreational activities;
- Exercise and mobility-related activities appropriate to participant abilities;
- Meals, snacks, hydration, and nutritional monitoring;
- Rest periods;
- Medication assistance within applicable regulatory scope;
- Behavioral observation and redirection;
- Family communication;
- Healthcare-provider coordination; and
- Individualized accommodations based upon participant needs.

TAL's philosophy emphasizes maintaining independence and existing abilities rather than unnecessarily doing for participants what they remain capable of doing safely for themselves.

3. Alzheimer's Disease, Dementia, and Mental-Health Support

TAL recognizes that adult day care programs frequently serve individuals experiencing cognitive impairment, dementia-related behaviors, depression, anxiety, isolation, and other behavioral or mental-health needs.

TAL's existing senior-care experience includes working with individuals with Alzheimer's disease and related dementias and operating under a Limited Mental Health specialty license that requires additional training and competency within the licensed assisted living setting.

This background will inform the Center's approach to:

- Structured daily routines;
- Cognitive and sensory activities;
- Consistent redirection;
- Behavioral observation;
- Reduction of unnecessary environmental stressors;
- Elopement and wandering awareness;
- Fall-risk awareness;

- Individualized communication techniques;
- Meaningful social engagement;
- Family communication;
- Recognition of changes in condition; and
- Coordination with appropriate healthcare and behavioral-health professionals.

The Center will maintain clear boundaries regarding the services that may legally and safely be provided within the adult day care setting and will coordinate higher levels of care when participant needs exceed the program's authorized scope.

4. Meaningful Daily Programming and Engagement

TAL will establish a structured daily program designed to make attendance meaningful rather than merely supervisory.

Programming will balance activity, socialization, therapeutic engagement, nutrition, relaxation, and individual choice.

Activities may include:

- Cognitive exercises and memory activities;
- Arts and crafts;
- Music and music-based engagement;
- Group games;
- Light exercise and range-of-motion activities;
- Gardening and nature-based activities;
- Holiday and cultural programs;
- Educational presentations;
- Community guest programs;
- Reminiscence activities;
- Intergenerational opportunities when appropriate;
- Faith-based or spiritual opportunities for participants who voluntarily choose to participate;
- Individual activities for participants who prefer smaller settings; and
- Special events involving families and community organizations.

Programming will be adapted to participant interests and functional abilities rather than relying upon a one-size-fits-all schedule.

5. Family and Caregiver Partnership

TAL views adult day care as a service to both the participant **and the family caregiver**.

Families and responsible parties will receive clear information regarding Center operations, participant needs, significant observations, program expectations, and available community resources.

TAL will promote regular communication with families and encourage their involvement in participant planning.

Adult day care can provide critical respite to individuals caring for aging relatives at home. TAL will therefore seek to make the Center a trusted extension of the family's care system—not simply a location where a participant spends several hours.

Where appropriate, TAL will also connect families with community resources, healthcare providers, social-service programs, caregiver education, and other available support.

6. Staffing and Local Workforce Development

TAL will maintain staffing appropriate to participant census, acuity, services provided, regulatory requirements, and operational needs.

The staffing structure will include qualified administrative and direct-care personnel with nursing resources incorporated as required by participant needs, program design, and applicable regulations.

TAL will emphasize:

- Appropriate screening and hiring;
- Required background screening;
- Orientation before independent assignment;
- CPR and first-aid preparedness;
- Alzheimer's and dementia-related training;
- Medication-assistance training;
- Emergency preparedness;
- Infection prevention;
- Participant rights;
- Abuse, neglect, and exploitation prevention and reporting;
- Confidentiality;
- Incident reporting;
- Competency validation;
- Ongoing in-service education; and
- Performance monitoring.

TAL will also utilize its relationship with **CareerSource Brevard Flagler Volusia** to support local recruitment and workforce development.

TAL has access to recruitment through Employ Florida and has entered into an On-the-Job Training arrangement supporting the development of qualified local employees. This strategy supports TAL's goal of creating employment opportunities for Flagler County residents while strengthening the Center's long-term workforce pipeline.

Whenever practical, TAL will recruit locally and develop employees who can grow with the Adult Day Care program.

7. Healthcare, Business, and Community Coordination

TAL will utilize its existing relationships within the local healthcare community to support continuity of care, referrals, participant resources, and responsible program growth.

TAL has established professional relationships with pharmacies, hospice organizations, physicians and healthcare practitioners, skilled nursing and rehabilitation providers, and other senior-care resources.

These relationships will support:

- Healthcare communication;
- Medication coordination;
- Referrals;
- Participant transitions;
- Family resources;
- Community education;
- Professional outreach; and
- Development of a broader referral network for the Center.

TAL will also pursue and strengthen relationships with senior programs, veterans' resources, caregiver organizations, churches, nonprofit organizations, community groups, local employers, and other organizations serving Flagler County residents.

Flagler County Chamber of Commerce Participation

TAL intends to actively participate in the **Flagler County Chamber of Commerce and the broader Flagler County business community** as part of the Center's community-engagement and census-development strategy.

Chamber participation will provide an additional avenue for TAL to establish relationships with local businesses, healthcare providers, employers, nonprofit organizations, community leaders, and service organizations whose employees, customers, patients, or families may benefit from adult day care and caregiver respite services.

TAL will utilize Chamber networking opportunities, community events, educational opportunities, and business relationships to:

- Increase community awareness of the Adult Day Care Center;
- Develop professional and community referral relationships;
- Educate local employers about adult day care as a resource for employees caring for aging family members;
- Identify opportunities for community partnerships and sponsorships;
- Promote local senior and caregiver resources;
- Strengthen the Center's integration into the Flagler County community; and
- Support long-term census development.

TAL views participation in the local business community as an important component of making the David I. Siegel Adult Day Care Center a recognized and accessible community resource.

8. Community Relaunch, Grand Opening, Enrollment, and Census Development

Long-term operational sustainability requires a strong and consistent participant census. TAL will therefore implement an active enrollment and outreach strategy rather than relying solely upon passive referrals.

Community Relaunch and Grand Opening

Following the transition of operations and once the Center is prepared to receive participants, TAL intends to conduct a **community relaunch and Grand Opening of the David I. Siegel Adult Day Care Center**.

The purpose of the relaunch will be to reintroduce the Center to the Flagler County community, create renewed awareness of its services, establish confidence in the transition of operations, strengthen professional referral relationships, and generate participant inquiries and enrollment.

TAL intends to invite:

- Seniors and family caregivers;
- Existing and prospective participants;
- Healthcare providers;
- Physicians and medical practices;
- Pharmacies;
- Home-health and hospice organizations;
- Rehabilitation and skilled nursing providers;
- Case managers and social-service professionals;
- Alzheimer’s and dementia organizations;
- Local businesses and employers;
- Chamber and community representatives;
- Veterans' organizations;
- Faith-based organizations;
- Senior-service organizations; and
- Other community stakeholders.

The Grand Opening may include:

- Guided tours of the Center;
- Introduction of TAL leadership and staff;
- Explanation of adult day care services;
- Enrollment information;
- Caregiver-respite education;
- Alzheimer's and dementia resource information;
- Participant activity demonstrations;
- Introductions to community and healthcare partners;

- Opportunities for families to ask questions;
- Individual enrollment consultations; and
- Opportunities to schedule follow-up tours or assessments.

TAL will use the Grand Opening as the beginning of a sustained census-development campaign rather than as a one-time promotional event.

Ongoing Outreach and Enrollment Strategy

Following the relaunch, TAL will maintain active year-round outreach.

Outreach will include:

- Healthcare-provider relationships;
- Hospital and rehabilitation discharge resources;
- Home-health and hospice relationships;
- Physician practices;
- Pharmacies;
- Senior-living and skilled nursing communities;
- Case managers and social-service professionals;
- Alzheimer’s and dementia caregiver networks;
- Flagler County Chamber of Commerce participation;
- Local businesses and employers;
- Veterans' resources;
- Community and nonprofit organizations;
- Local churches and faith communities;
- Health fairs and community events;
- Caregiver-resource programs;
- Educational presentations;
- Digital and social-media outreach;
- Family referrals;
- Professional networking; and
- Direct outreach to caregivers who may benefit from respite services.

TAL will also explore opportunities to host periodic **open houses, caregiver education programs, health and wellness presentations, dementia and memory-care education, community-resource events, and family-engagement activities** at the Center.

These initiatives are intended to keep the Center visible and engaged with the community after the initial relaunch.

Measurement of Census-Building Activities

TAL will monitor:

- Number of inquiries;
- Scheduled tours;
- Completed tours;

- Applications;
- New enrollments;
- Average daily attendance;
- Participant retention;
- Referral sources;
- Community outreach activities;
- Professional referral relationships;
- Inquiry-to-enrollment conversion; and
- Reasons prospective participants elect not to enroll.

Referral sources will be tracked so TAL can identify which healthcare providers, community organizations, Chamber relationships, events, digital outreach efforts, and professional partnerships are producing meaningful results.

This information will allow management to direct resources toward the strategies producing the strongest enrollment results.

The goal is to establish the David I. Siegel Adult Day Care Center as a **visible, trusted, and recognized Flagler County resource for seniors and caregivers while steadily increasing census toward long-term operational sustainability.**

9. Nutrition and Meal Services

TAL recognizes nutrition and hydration as essential components of senior health and quality of life.

Meals and snacks will be provided in accordance with applicable program requirements and participant needs.

TAL will monitor:

- Meal quality;
- Food safety;
- Portion appropriateness;
- Special dietary instructions when properly ordered and within program capability;
- Hydration;
- Participant food preferences;
- Allergies and documented dietary concerns; and
- Participant response to meals.

Meals will also serve as an opportunity for social interaction and community-building within the Center.

10. Safety, Emergency Preparedness, and Risk Management

Participant safety will be incorporated throughout Center operations.

TAL will maintain policies and procedures addressing areas including:

- Emergency preparedness;
- Fire and evacuation procedures;
- Severe weather and disaster response;
- Elopement and missing-participant response;
- Falls;
- Medical emergencies;
- Medication-related incidents;
- Infection prevention;
- Abuse, neglect, and exploitation;
- Incident documentation and reporting;
- Facility hazards;
- Participant transportation, if provided;
- Food safety;
- Confidentiality; and
- Continuity of operations.

Staff will receive appropriate emergency training and participate in required drills and competency reviews.

Incidents and near misses will be evaluated not simply as isolated events but as opportunities to identify and correct underlying risks.

Quality Control Methodology

Quality control will be an ongoing management function rather than an activity performed only when an inspection or complaint occurs.

TAL will implement a **Plan – Monitor – Review – Correct – Improve** quality-management process.

11. Daily Operational Quality Control

Management will monitor key operational areas each day, including:

- Participant attendance;
- Staffing coverage;
- Participant supervision;
- Significant changes in participant condition or behavior;
- Medication-related responsibilities;
- Meals and hydration;
- Activities;
- Facility cleanliness and safety;
- Family concerns;
- Incidents;
- Documentation; and
- Unresolved operational issues.

Issues requiring immediate intervention will be addressed promptly rather than deferred to a later review.

12. Documentation and Compliance Audits

TAL will conduct routine internal reviews of participant and operational records.

Reviews may include:

- Participant files;
- Assessments and required health information;
- Attendance documentation;
- Medication-related records;
- Staff personnel files;
- Background screening documentation;
- Training records;
- Certifications;
- Emergency documentation;
- Incident reports;
- Meal and activity documentation;
- Required postings; and
- Other regulatory records.

Deficiencies identified internally will be assigned corrective action and followed through to completion.

13. Staff Performance and Competency Monitoring

Employees will receive ongoing supervision and performance feedback.

Quality monitoring will evaluate:

- Attendance and dependability;
- Participant interaction;
- Professional conduct;
- Compliance with policies;
- Documentation;
- Communication;
- Safety practices;
- Training completion;
- Demonstrated competencies; and
- Responsiveness to participants and families.

Additional education, coaching, competency validation, corrective action, or other intervention will be implemented when performance does not meet expectations.

14. Participant and Family Feedback

Participant and family experience will be an important quality indicator.

TAL will obtain feedback through regular communication, informal check-ins, concerns and grievance processes, and periodic satisfaction reviews.

Complaints or concerns will be documented, investigated as appropriate, addressed promptly, and reviewed for recurring patterns.

TAL will use feedback to improve programming, communication, meals, scheduling, activities, and overall participant experience.

15. Incident Review and Corrective Action

Incidents, accidents, complaints, medication concerns, falls, near misses, injuries, safety concerns, and other significant events will be reviewed to determine:

1. What occurred;
2. Whether immediate action was taken;
3. Whether required notifications or reports were completed;
4. Whether policies and procedures were followed;
5. Whether additional staff education is necessary;
6. Whether environmental or operational changes are required; and
7. What action can reduce the likelihood of recurrence.

Corrective actions will be documented and monitored for effectiveness.

16. Performance Measures

TAL will monitor measurable indicators to evaluate operational performance and program growth.

Key measures may include:

- Participant census;
- Average daily attendance;
- Enrollment growth;
- Participant retention;
- Inquiry-to-enrollment conversion;
- Referral sources;
- Staff turnover;
- Staff training compliance;
- Incidents and falls;
- Medication-related events;
- Participant/family complaints;
- Resolution of complaints;

- Participant and family satisfaction;
- Program activity participation;
- Regulatory compliance;
- Operating revenues and expenses; and
- Progress toward financial sustainability.

Management will use these indicators to identify trends and make data-informed operational decisions.

17. Continuous Quality Improvement

TAL's quality-control system will emphasize prevention and continuous improvement.

When an opportunity for improvement is identified, TAL will:

Identify the issue → determine the cause → establish corrective action → assign responsibility → establish a completion timeframe → verify completion → evaluate whether the correction was effective.

This process will apply to clinical, operational, staffing, financial, safety, service, and customer-experience concerns.

18. Financial and Operational Sustainability

TAL recognizes that successful operation of the David I. Siegel Adult Day Care Center requires both high-quality services and sound financial management.

Management will routinely evaluate:

- Census;
- Revenue;
- Payroll;
- Staffing utilization;
- Food costs;
- Supplies;
- Insurance;
- Utilities and facility-related expenses;
- Vendor expenses;
- Marketing effectiveness;
- Accounts receivable;
- Program utilization; and
- Overall operating performance.

Staffing and other variable costs will be managed responsibly as enrollment changes while maintaining required service quality and regulatory compliance.

TAL's goal is to establish a financially sustainable program capable of serving Flagler County families over the long term without sacrificing participant care.

Project Outcome

Through this approach, Therapeutic Assisted Living Corp. intends to provide Flagler County with more than an operator for the David I. Siegel Adult Day Care Center.

TAL seeks to establish a **locally managed, accountable, participant-centered senior resource** that provides meaningful daytime services for older adults, dependable respite for caregivers, employment opportunities for local residents, collaboration with healthcare and community partners, and responsible stewardship of the County-owned facility.

The proposed community relaunch, ongoing Chamber and business-community participation, healthcare referral development, caregiver outreach, and measurable census-development strategy are intended to restore and expand awareness of the Center while establishing a sustainable base of participants.

TAL will measure success by the quality and safety of services provided, participant and family satisfaction, regulatory compliance, workforce stability, community utilization, census growth, and the Center’s progress toward sustainable long-term operations.

THERAPEUTIC ASSISTED LIVING CORP.

LOCAL PRESENCE AND WORKFORCE COMMITMENT STATEMENT

David I. Siegel Adult Day Care Center - Flagler County, Florida

---

Therapeutic Assisted Living Corp. ("TAL") respectfully submits this Local Presence and Workforce Commitment Statement in support of its proposal to operate the David I. Siegel Adult Day Care Center. TAL is an established Palm Coast senior-care provider with direct experience serving older adults and families in the local community. As a locally based organization, TAL's approach is centered on keeping services, employment opportunities, professional relationships, and economic activity connected to Flagler County whenever practical.

TAL's local presence provides an operational advantage for the proposed project. The organization already understands the needs of area seniors and caregivers, maintains relationships with healthcare and community providers, and has experience coordinating services within the local senior-care network. This existing community foundation will support continuity, responsiveness, participant outreach, family communication, and the development of trusted referral relationships for the Adult Day Care Center.

Commitment to Local Employment and Workforce Development

TAL is committed to recruiting and developing qualified local personnel for the Adult Day Care Center whenever practical and consistent with applicable licensing, background-screening, training, and competency requirements. TAL is approved to recruit local talent through Employ Florida and has an active relationship with CareerSource Brevard Flagler Volusia. TAL has also entered into an On-the-Job Training arrangement that can support the development of eligible local employees. These resources strengthen TAL's ability to build a sustainable workforce pipeline while creating employment opportunities for residents of Flagler County and the surrounding service area.

Commitment to Community and Business Engagement

TAL intends to participate actively in the Flagler County Chamber of Commerce and the broader local business community as part of its outreach, partnership, and census-development strategy. Chamber participation will help TAL build relationships with local employers, healthcare providers, nonprofit organizations, community leaders, and service organizations that may encounter families in need of adult day care or caregiver respite services.

Commitment to Center Relaunch and Community Awareness

Following transition and operational readiness, TAL intends to conduct a community relaunch and Grand Opening for the David I. Siegel Adult Day Care Center. The relaunch will be designed to increase awareness of the Center, reconnect the facility with seniors and caregivers, engage healthcare and referral partners, and support participant enrollment and census growth. TAL anticipates inviting families, healthcare providers, community organizations, local businesses, faith-based organizations, senior-service professionals, and other stakeholders to tour the Center and learn about available services.

Commitment to Local Partnerships and Economic Participation

Whenever practical and fiscally responsible, TAL will seek opportunities to engage local vendors, service providers, healthcare partners, workforce resources, and community organizations. TAL's goal is to operate the Center not as an isolated program, but as a connected Flagler County resource that contributes to the local senior-care continuum, creates employment opportunities, supports area families, and maintains strong community relationships.

Statement of Commitment

TAL's local presence, existing healthcare relationships, workforce-development resources, and commitment to community engagement will be used to support a stable transition and long-term operation of the David I. Siegel Adult Day Care Center. TAL is committed to being an accountable local operator and a long-term partner in serving Flagler County seniors, caregivers, families, and the surrounding community.

Submitted by:	Latasha Rowell
Title:	Owner / Administrator
Organization:	Therapeutic Assisted Living Corp.
Date:	8/23/26

THERAPEUTIC ASSISTED LIVING CORP.

AHCA PROOF OF FINANCIAL ABILITY TO OPERATE

For Health Care Licensing Application

THERAPEUTIC ASSISTED LIVING CORP.
AHCA PROOF OF FINANCIAL ABILITY TO OPERATE
TABLE OF CONTENTS

Accountant's Disclaimer	I
Prescribed Form "Proof of Financial Ability to Operate"	1
Summary of Significant Assumptions and Selected Supplementary Information	19

REG & ADVISORS, CPA, PA

Tax | Accounting | Advisory

ACCOUNTANT'S DISCLAIMER

To Management

THERAPEUTIC ASSISTED LIVING CORP.

The accompanying projected financial statements (presented on prescribed form "Proof of Financial Ability to Operate") of **Therapeutic Assisted Living Corp.** and selected notes, were not subjected to an audit, review, or compilation engagement by us and we do not express an opinion, a conclusion, nor provide any assurance on them.

The prescribed form is designed by the Agency for Health Care Administration (AHCA) to meet its needs, and there is a presumption that the required information is sufficient to demonstrate the anticipated provider's revenue and expenditures, the basis for financing anticipated cash-flow requirements of the provider, and an applicant's access to contingency financing to be presented with AHCA. Accordingly, this projection may not be useful for other purposes.

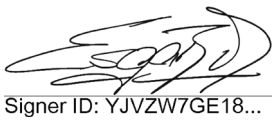

Signer ID: YJVZW7GE18...

REG & Advisors, CPA, PA
Miami, Florida
August 23, 2026

Health Care Licensing Application
PROOF OF FINANCIAL ABILITY TO OPERATE
INSTRUCTIONS

Authority: The following Schedules are designed to meet the specific requirements of 408.810(8), 408.8065(1), and 400.471, Florida Statutes which require the applicant to show anticipated provider revenue and expenditures, the basis for financing anticipated cash-flow requirements of the provider, and an applicant's access to contingency financing. All schedules must be prepared in accordance with generally accepted accounting principles (GAAP). A Certified Public Accountant must compile, examine, or apply agreed-upon procedures to prospective financial statements, including summaries of significant assumptions and accounting policies. An applicant will have demonstrated financial ability to operate by completing proof of financial ability to operate schedules 1-7 in conformity with the below instructions and GAAP, all relevant rules and statutes, and projections that show assets, credit, and projected revenues meet or exceed projected liabilities and expenses and Independent evidence of sufficient funds for start up, working capital & contingencies.

These forms must accompany any ***initial or change of ownership (CHOW) application*** for the following health care provider types:

Adult Day Care Centers (ADCC)	Health Care Clinics
Assisted Living Facilities (ALF)	Home Health Agencies
Intermediate Care Facilities for the Developmentally Disabled (ICFDD)	Hospice
Prescribed Pediatric Extended Care Center (PPEC)	Home Medical Equipment
	Skilled Nursing Facilities

General Instructions – As an all inclusive set of schedules, some of the individual detailed items in these forms may not apply to all provider types listed above. For example, Schedule 3 has an item for Room & Board revenue. This line would be appropriate for residential facilities like skilled nursing or ALF but would not apply to agencies such as home health. In the schedule where the option for hours or visits or days is presented, the applicant may use the metric that is appropriate for the agency. For example, hours are appropriate for home health; visits is appropriate for health care clinics; and days is appropriate for skilled nursing facilities. Several of the schedules include check lists to assist the preparer in completing these forms.

Assumptions Used – Schedules 1-7 reflect the anticipated results of future operations. Since these schedules are forward looking, the applicant will have to make certain assumptions about future patients, revenues, and expenses. The assumptions an applicant uses are essential in developing a projected set of financial schedules. The applicant, at a minimum, must provide assumptions about the number and types of patients it will provide services to, how it plans on acquiring those patients, the staffing required to provide service to those patients, how it plans on recruiting the necessary staffing, and its method of estimating accounts receivable and payable as discussed in the instructions for Schedule 5. All assumptions used in the projections must be contained in accompanying notes to the projections and all assumptions must be consistent with existing rules and statutes governing minimum staffing requirements and any other requirements that would have a financial impact on the applicant. **Home Health Agencies Only** - Section 400.471(2)(d), Florida Statutes, requires a business plan, signed by the applicant, which details the home health agency's methods to obtain patients and its plan to recruit and maintain staff. At a minimum the plan should include a description of the business, services to be provided, the existing market, the level of competition in the market, the applicant's strategy to enter the market (obtain patients), a time-line of major events (for example, expected date of licensure, certification, etc.), the applicant's strategy to recruit and maintain personnel, and a description of the applicant's admission policy.

Schedule 1: Estimated Provider Costs and Source of Funds - The purpose of this Schedule is to disclose ALL costs needed to begin operations (or resume operations in the case of a CHOW) including all pre-opening costs prior to beginning operations, funding for contingencies, and the funds necessary to sustain the operations until it reaches a positive cash flow. The sources of the funding must be listed and independent, certifiable documentation of the existence and availability of those funds must be provided. All funding must be supported by evidence that the entity owns or will have access to funds as needed. Examples of documents that support funding includes copies of bank statements for accounts owned by the proposed entity, a letter of commitment from a bank or other independent lending sources, a copy of a line of credit agreement established for the proposed entity (including the available balance), and any other liquid assets. Liquid assets are defined as assets that can easily and quickly be converted to cash. Funding provided by the corporate parent of a proposed entity must be supported with a letter from the parent indicating that such funds are available to the applicant and independent, certifiable documentation of the existence and availability of those funds as defined above. The most recent Audited Financial Statements of the parent will be considered proof of the parent's ability to fund the applicant unless the parent's Audited Financial Statements indicate that current liabilities are greater than current assets and/or long-term debt exceeds net assets, and/or the audit contains a going concern issue. In the case of the purchase price associated with a change of ownership, the executed bill of sale is acceptable proof of funding the purchase price. The proof of funding for contingencies must include a signed statement from the applicant which identifies the source of contingency funding and guarantying that the contingency funding will be made available to handle extraordinary occurrences that would have a financial impact such as major repairs, purchase of capital equipment, a decrease in patient days, etc. All proof of funding documentation must be dated no later than ten (10) days prior to the date the application is received by AHCA. Attach any other supplementary documentation and/or explanations as needed. For additional instruction follow the checklist at the bottom of Schedule 1.

Schedule 2 and 2.1: Staffing Requirements - The purpose of Schedule 2 is to present the total number of Full Time Equivalent employees (FTEs) projected to staff the operation and convert these FTEs to the total annual salary cost. An employee working only 20 hours a week would be shown as .5 FTE. A full-time employee not hired until the last 3 months of the year would be shown as .25 FTE. The last column for each year is the product of the number of FTEs times the average annual salary per FTE. Schedule 2 is for direct employees only (employees that have payroll taxes withheld from their pay). Schedule 2.1 is for contracted employees. The staffing presented should be consistent with the respective authoritative rules and statutes regarding minimum staffing required. The combined staffing hours on Schedule 2 and 2.1 must be equal to or in excess of the hours needed to provide the services billed on Schedule 3. In addition, the applicant must provide documentation supporting the salary levels for each position. Documentation supporting salary levels may include, labor market studies, industry published averages, signed statements from individuals agreeing to the projected salary, etc. For additional instructions refer to the checklist provided at the bottom of the page on the Schedule 2 and 2.1.

Schedule 3: Hours and Charges - The purpose of this Schedule is to disclose the estimated number of service hours, visits, or days (as appropriate for the provider type) along with the amount charged per hour, visit, or day for the first and second year of operations. Revenue on this schedule must reconcile with Total Gross Revenues on Schedule 4 Line 5, Column 7. Because the method and type of reimbursement varies among different providers, the following subsections were developed to better reconcile with the provider type:

Part A: Must be completed by Home Health, Nurse Registry, Skilled Nursing, ALF, ICFDD, PPEC, and ADCC Only. Home Health applicants must also complete Schedule 4.1 if applying for Medicare and Medicaid Certification.

Part B: Must be completed by Health Care Clinic Applicants only.

Part C: Must be completed by Hospice Applicants only.

All revenue methods will not easily relate to this form, however, please make your best estimates. Attach notes of explanation as needed.

Schedule 3HME: - The purpose of this schedule is the same as the purpose for Schedule 3; however, it has been specifically designed for home medical equipment applicants. This Schedule must be completed by Home Medical Equipment Applicants.

Schedule 4: Projected Operating Revenue - The purpose of this form is to present revenues by payer category. The Total Gross Revenues (Line 5, Column 7) must reconcile with Schedule 3 and 3HME. Often times Medicare, Medicaid, and HMOs may reimburse the agency at a different rate than the charges listed on Schedule 3. The difference must be accounted for as a contractual adjustment on Line 6. HME providers and any other providers selling medical equipment must record cost of goods sold on Line 8.

Use either hours, visits or days as appropriate for the provider type. Medicare and Medicaid net revenues must be consistent with the most recently approved reimbursement methodologies. The hours, visits, or days section of this schedule does not apply to HME applicants.

Schedule 4.1: Supplementary Home Health Agency Schedule - If a Home Health applicant indicates in the application that it is applying for Medicare and/or Medicaid certification and/or the applicant includes Medicare and/or Medicaid revenue on Schedule 4, then the Home Health Agency applicant must complete this schedule. The purpose of this schedule is to address the certification process for Medicare and Medicaid. Home Health Agencies are required to be operational and have at least 10 skilled patients prior to being surveyed by Medicare and Medicaid. Approval is not guaranteed and takes approximately six months to complete. The applicant will not receive reimbursement from Medicare or Medicaid for treatment of Medicare and Medicaid patients prior to certification. In order for an initial applicant to become Medicare and Medicaid certified, the applicant will have to seek accreditation with deemed status from one of three national accreditation organizations. You must provide a written estimate for the cost of accreditation with deemed status from one of the three national accreditation organizations (Community Health Accreditation Organization, The Joint Commission, and Accreditation Commission for Health Care) and include and clearly identify the cost of the accreditation in the projected financial schedules. If the applicant is projecting Medicare and Medicaid revenues prior to anticipated certification, an adjustment must be made on this schedule to remove the Medicare and Medicaid revenues prior to certification (Certification Period Reduction). The Total Net Adjusted Revenue from this schedule must be used on Schedule 6, Line 1, year one instead of the Schedule 4 Net Revenue (Col. 7, Line 13).

Schedule 5: Balance Sheet – The balance sheet is ultimately the results of the projections on Schedule 6 (Income Statement) and Schedule 7 (Cash Flow Statement) and must reconcile with those schedules. The applicant must provide notes with an explanation of the assumptions used for collection of revenues and the paying of expenses. Particularly, the assumptions for payment of rent which typically is paid at the beginning of a month; the payment of salaries, which may be weekly, bi-weekly, or monthly; all of which impact payables differently. The assumptions presented for receivables and payables have a direct impact on the cash flow statement and must be consistently applied when completing the cash flow statement.

Schedule 6: Projected Summary of Revenues and Expenses – The Schedule is designed to show the projected profitability of the applicant. The revenues on this schedule must reconcile with Schedule 4 and 4.1. Administrative, direct, and contracted salaries expense on this schedule must reconcile with Schedule 2 and 2.1. This schedule must included taxes and benefits for direct employees and interest expense on funds borrowed (as indicated on Schedule 1). The monthly salary allocations must be sufficient to meet all minimum staffing requirements including the staffing required to generate the monthly revenue allocated. This schedules must included allocations for utilities (phone, electric, etc), supplies (office and medical), and all other costs expected to be incurred in the normal course of business. If costs are to be shared with an affiliate or parent company, then this schedule should include the applicant's share of those costs. If this is a new entity, the revenue projections must reflect the applicant's assumptions on the growth of patients/ residents expected. Simply dividing year end revenues by 12-months will not be considered a reasonable assumption for a new entity. Existing entities applying for a CHOW may be expected to have a more stable month to month revenue stream. Fixed costs such as rent and administrative overhead must be relatively consistent from month to month while variable cost such as patient care must be proportional to the revenue earned in any one month (matching principle).

The applicant must provide documentation in the form of leases and insurance quotes in support of the rent and insurance expenses projected. **For initial applicants only, financial projections that project a year one operating margin (Schedule 6, Line 36 divided by Schedule 6, Line 1) or any monthly operating margin in year one of 15 percent or greater will be deemed unreasonable and the applicant will be found to have not met its proof of financial ability to operate.**

Schedule 7: Projected Cash Flow Statement – This schedule is designed to determine the working capital needs of the applicant. Line 1 must equal Schedule 6, Line 39. Lines 2 through 12 must reconcile with the income statement and balance sheet and must be consistent with the applicant's assumptions. Line 13 must equal (Line 1 plus Line 7 less Line 12). In year one month one, Line 14 must equal Total Pre-Opening Cost from Schedule 1 Line 14. If the applicant is projecting any capital additions, then the cost of those additions must be included on this schedule. If the applicant is projecting repaying loan principle, then principle repayments must be included on this schedule.

Total Cash Needs - Line 20, Total Cash Needs, is the total of Line 19 - Total Other Uses of Cash, plus Cash Flows from Operations, Line 13. A positive cash flow on Line 13 is subtracted from Line 19. If the positive cash flow is greater than the other uses, the net positive cash needs will be shown as a negative on line 20.

Cumulative Cash Need - Line 21, Cumulative Cash needs, is the running total of last month's cumulative cash needs (Line 21 from last month plus the Total Cash Needs from Line 20 for the current month). If the Total Cash Needs this month is a negative amount meaning a positive cash contribution, it would be subtracted from the cumulative cash amount from last month. The highest monthly amount on Line 21 (considering both year one and year two) will be entered on Schedule 1 as Working Capital. Year 2, month 1 uses year 1, month 12 for its cumulative beginning.

Health Care Licensing Application
PROOF OF FINANCIAL ABILITY TO OPERATE

Authority: Pursuant to subsection 408.810(8) and 400.471, Florida Statutes, upon application for initial licensure or change of ownership licensure, the applicant shall furnish satisfactory proof of the applicant's financial ability to operate in accordance with the requirements of this part, authorizing statutes and applicable rules.

The following provider types are **required** to submit this form: Assisted Living Facilities, Adult Day Care Centers, Hospice, Intermediate Care Facilities for the Developmentally Disabled, Prescribed Pediatric Extended Care Centers, Health Care Clinics, Home Health Agencies, Home Medical Equipment providers, Nurse Registries and Skilled Nursing Facilities.

Provider/Facility Type:			
License # (for change of ownership applications):			
Provider Name: Therapeutic Assisted Living Corp.		Telephone Number: 386-586-2324	
Street Address: 1000 Belle Terre blvd		Fax Number: 844-769-0772	
City: Palm Coast	County: Flagler	State: FL	Zip: 32164
E-mail Address: ☐ No			
Mailing Address: ☑ Same as Above			
City:		State:	Zip:

The attached schedules (1 through 7) must be completed for an initial or change of ownership application. All required documents must be prepared in accordance with generally accepted accounting principles. A Certified Public Accountant must compile, examine, or apply agreed-upon procedures to prospective financial statements, including summaries of significant assumptions and accounting policies. A financial forecast consists of prospective financial statements that present, to the best of the applicant's knowledge and belief, an entity's expected financial position, results of operations, and cash flows.

Name of Certified Public Accountant:			
Company Name (if applicable): REG & Advisors, CPA, PA		Telephone Number: 786-706-5900	
Street Address: 1395 Brickell Ave, Suite 800		Fax Number: 786-706-5901	
City: Miami	County: Dade	State: FL	Zip: 33131
E-mail Address: ☐ No ronnie@regadvisorscpa.com			
Mailing Address: ☑ Same as Above			
City:		State:	Zip:

Signer ID: YJVZWZGE18

AC55135

Signature of Certified Public Accountant and License #

08/23/2026

Date

SCHEDULE 1: ESTIMATED PROVIDER COSTS AND SOURCE OF FUNDS

	Pre-Opening Costs (total funds needed)		
1	Advertising	$	-
2	Equipment Purchases	$	500.00
3	Legal Costs/Consulting	$	1,800.00
4	Beginning Inventory	$	500.00
5	Insurance	$	-
6	License Fee	$	1,705.00
7	Accreditation Survey and/or Medicare & Medicaid Certification	$	-
	Deposits		
8	Building	$	-
9	Utility	$	-
10	Other	$	-
	Staffing		
11	Recruitment	$	-
12	Training	$	-
13	Other	$	-
14	**Total Pre-Opening Costs (Sum of Lines 1-13)**	**$**	**4,505.00**
15	Purchase Price (Change of Ownership Only)	$	-
16	Working Capital (Includes Pre-Opening Cost, See Checklist Below)	**$**	**59,388.13**
17	Contingency Funding (See Checklist Below)	**$**	**20,884.59**
18	**Total Working Capital, Contingency Funding, and Purchase Price**	**$**	**80,272.72**

	Source of Funds (Please Attach Documentation Supporting the Source of Funding Listed Below: REQUIRED)		
19	Cash on Hand	$	80,272.72
20	Non-related Financing	$	-
21	Owners/Investors	$	-
22	Parent or Affiliated Entities	$	-
23	Other (describe):	$	-
24	**Total Source of Funds**	**$**	**80,272.72**

Applicant Checklist

✓ **Working Capital** - is the amount needed to pay operating cost until a positive cash flow is reached. Working Capital should equal the largest cumulative cash need from Schedule 7 Line 21. Since Schedule 7 includes pre-opening cost, the largest cumulative cash need from Schedule 7 Line 21 will also include pre-opening cost.

✓ **Contingency Funding** - should equal one month's average operating expense from year one and represents funding available for extraordinary occurrences that are not anticipated in the financial projections. Contingency Funding should equal Year One Schedule 6 Line 35 divided by 12.

✓ **Proof of Funding** - Has the applicant provided proof of funding as described in the instructions?
If so, does the proof of funding equal or exceed the value on Line 18?
For **Health Care Clinics, Home Health, and Home Medical Equipment Agencies**: Total proof of funding can not be less than three(3) times the amount on line 17 per 408.8065(1)(c), Florida Statutes

SCHEDULE 2: STAFFING REQUIREMENTS

		YEAR ONE			YEAR TWO		
	Note: 1.0 FTE = 40 hour week	FTE's	AVERAGE ANNUAL SALARY per FTE	TOTAL ANNUAL COST	FTE's	AVERAGE ANNUAL SALARY per FTE	TOTAL ANNUAL COST
	ADMINISTRATION	Col. 1	Col. 2	Col.1 x Col.2	Col. 1	Col. 2	Col.1 x Col.2
1	Administrator/General Manager	0.80	$ 31,200.00	$ 24,960.00	0.80	$ 31,200.00	$ 24,960.00
2	Alternate Administrator	0.20	$ 31,200.00	$ 6,240.00	0.20	$ 31,200.00	$ 6,240.00
3	Director of Nursing/Medical Director	0.00	$ -	$ -	0.00	$ -	$ -
4	Alternate Director of Nursing	0.00	$ -	$ -	0.00	$ -	$ -
5	Financial Officer	0.20	$ 31,200.00	$ 6,240.00	0.20	$ 31,200.00	$ 6,240.00
6	Admissions Director	0.00	$ -	$ -	0.00	$ -	$ -
7	Bookkeeper	0.00	$ -	$ -	0.00	$ -	$ -
8	Secretary	0.00	$ -	$ -	0.00	$ -	$ -
9	Personnel/Complaint Records	0.00	$ -	$ -	0.00	$ -	$ -
10	Medical Records Clerk	0.00	$ -	$ -	0.00	$ -	$ -
11	Other:	0.00	$ -	$ -	0.00	$ -	$ -
12	**TOTAL ADMINISTRATION**	**1.20**		**$ 37,440.00**	**1.20**		**$ 37,440.00**
	GENERAL PERSONNEL (DIRECT EMPLOYEES ONLY)						
13	Delivery	0	$ -	$ -	0	$ -	$ -
14	Intake	0	$ -	$ -	0	$ -	$ -
15	Maintenance/Repair	0	$ -	$ -	0	$ -	$ -
16	Inventory	0	$ -	$ -	0	$ -	$ -
17	Other:	0	$ -	$ -	0	$ -	$ -
18	**TOTAL GENERAL**	**0**		**$ -**	**0**		**$ -**
	HEALTH CARE PROFESSIONALS (DIRECT EMPLOYEES ONLY) - Nurse Registries Complete Schedule 2.1						
19	R.N.s	0.00	$ -	$ -	0.00	$ -	$ -
20	L.P.N.s	0.00	$ -	$ -	0.00	$ -	$ -
21	Home Health Aides	0.00	$ -	$ -	0.00	$ -	$ -
22	Physical Therapy	0.00	$ -	$ -	0.00	$ -	$ -
23	Occupational Therapy	0.00	$ -	$ -	0.00	$ -	$ -
24	Speech Therapy	0.00	$ -	$ -	0.00	$ -	$ -
25	Respiratory Therapy	0.00	$ -	$ -	0.00	$ -	$ -
26	Social Services	0.00	$ -	$ -	0.00	$ -	$ -
27	Homemaker Services	0.00	$ -	$ -	0.00	$ -	$ -
28	Dietary Guidance	0.00	$ -	$ -	0.00	$ -	$ -
29	Home Health Aides	0.00	$ -	$ -	0.00	$ -	$ -
30	Other: Caregivers	3.00	$ 31,200.00	$ 93,600.00	5.00	$ 31,200.00	$ 156,000.00
31	**TOTAL HEALTH CARE**	**3.00**		**$ 93,600.00**	**5.00**		**$ 156,000.00**
	GRAND TOTAL	**4.20**		**$ 131,040.00**	**6.20**		**$ 193,440.00**

Applicant Checklist

✓ **Required Staffing** - has the applicant included salaries and FTEs to meet the minimum administrative staffing required under AHCA licensing rules and statutes?

✓ **Comparison to Hours Billed** - Has the applicant allocated enough salaries and FTEs on Schedule 2 including contracted personnel on Schedule 2.1 to provide services to the number of patients on Schedule 3?

SCHEDULE 2.1: CONTRACT SERVICES

		YEAR ONE			YEAR TWO		
		Hours	Cost Per Hour	Total Cost	Hours	Cost Per Hour	Total Cost
	GENERAL PERSONNEL	Col. 1	Col. 2	Col.1 x Col.2	Col. 1	Col. 2	Col.1 x Col.2
1	Delivery	0	$ -	$ -	0	$ -	$ -
2	Intake	0	$ -	$ -	0	$ -	$ -
3	Maintenance/Repair	0	$ -	$ -	0	$ -	$ -
4	Inventory	0	$ -	$ -	0	$ -	$ -
5	Other:		$ -	$ -	0	$ -	$ -
6	**TOTAL**	**0**		**$ -**	0		**$ -**
	HEALTH CARE PROFESSIONALS						
7	R.N.s		$ -	$ -		$ -	$ -
8	L.P.N.s	260	$ 25.00	$ 6,500.00	260	$ 25.00	$ 6,500.00
9	Home Health Aides		$ -	$ -		$ -	$ -
10	Physical Therapy		$ -	$ -		$ -	$ -
11	Occupational Therapy		$ -	$ -		$ -	$ -
12	Speech Therapy		$ -	$ -		$ -	$ -
13	Respiratory Therapy		$ -	$ -		$ -	$ -
14	Social Services		$ -	$ -		$ -	$ -
15	Homemaker Services		$ -	$ -		$ -	$ -
16	Dietary Guidance		$ -	$ -		$ -	$ -
17	Home Health Aides		$ -	$ -		$ -	$ -
18	Other:		$ -	$ -		$ -	$ -
19	Other:		$ -	$ -		$ -	$ -
20	Other:		$ -	$ -		$ -	$ -
21	Other:		$ -	$ -		$ -	$ -
22	Other:		$ -	$ -		$ -	$ -
23	**TOTAL**	**260**		**$ 6,500.00**	**260**		**$ 6,500.00**

Applicant Checklist

✓ **Comparison to Hours Billed** - Has the applicant allocated enough salaries and FTEs on Schedule 2 including contracted personnel on Schedule 2.1 to provide services to the number of patients on Schedule 3?

___ **Nurse Registry** - If the applicant is applying for a nurse registry license, Schedule 2.1 must be completed. If the applicant is applying for a license other than nurse registry this schedule should only be completed to reflect the appropriate number of non-direct employee hours anticipated by the applicant, if any.

SCHEDULE 3: HOURS, VISITS, AND CHARGES

Part A: For Home Health, Nurse Registry, Skilled Nursing, ALF, ICFDD, PPEC. and ADCC Only

	FIRST YEAR			SECOND YEAR		
	Total Number of Hours/Days	Average Charge Per Hour/Day	Total Gross Revenue	Total Number of Hours/Days	Average Charge Per Hour/Day	Total Gross Revenue
	Col. 1	Col. 2	Col. 1 x Col. 2	Col. 1	Col. 2	Col. 1 x Col. 2
Room & Board	0	$ -	$ -	0	$ -	$ -
Skilled Nursing	0	$ -	$ -	0	$ -	$ -
Ancillary						
Physical Therapy	0	$ -	$ -	0	$ -	$ -
Occupational Therapy	0	$ -	$ -	0	$ -	$ -
Speech Therapy	0	$ -	$ -	0	$ -	$ -
Medical Social Services	0	$ -	$ -	0	$ -	$ -
Respiratory Therapy	0	$ -	$ -	0	$ -	$ -
IV Therapy	0	$ -	$ -	0	$ -	$ -
Home Health Aides or CNA	0	$ -	$ -	0	$ -	$ -
Homemaker/Companion	0	$ -	$ -	0	$ -	$ -
Nutritional Guidance	0	$ -	$ -	0	$ -	$ -
Home Health Aides or CNA	0	$ -	$ -	0	$ -	$ -
PPEC & ADCC						
Daily Patient	3,380	$ 65.00	$ 219,700.00	6760	$ 65.00	$ 439,400.00
Hourly Patient	0	$ -	$ -	0	$ -	$ -
TOTAL	**3,380**		**$ 219,700.00**	**6,760**		**$ 439,400.00**

Part B: Health Care Clinics Applicants Only

List the Type of Visits	FIRST YEAR			SECOND YEAR		
	Total Number of Visits	Average Charge Per Visits	Total Gross Revenue	Total Number of Visits	Average Charge Per Visits	Total Gross Revenue
	Col. 1	Col. 2	Col. 1 x Col. 2	Col. 1	Col. 2	Col. 1 x Col. 2
	0	$ -	$ -	0	$ -	$ -
	0	$ -	$ -	0	$ -	$ -
	0	$ -	$ -	0	$ -	$ -
	0	$ -	$ -	0	$ -	$ -
	0	$ -	$ -	0	$ -	$ -
	0	$ -	$ -	0	$ -	$ -
	0	$ -	$ -	0	$ -	$ -
TOTAL	**0**		**$ -**	**0**		**$ -**

Part C:Hospices Only

	FIRST YEAR			SECOND YEAR		
	Total Number of Visits/Days	Average Charge Per Visit/Day	Total Gross Revenue	Total Number of Visits/Days	Average Charge Per Visit/Day	Total Gross Revenue
	Col. 1	Col. 2	Col. 1 x Col. 2	Col. 1	Col. 2	Col. 1 x Col. 2
Routine Home Care	0	$ -	$ -	0	$ -	$ -
Continuous Home Care	0	$ -	$ -	0	$ -	$ -
Inpatient Respite	0	$ -	$ -	0	$ -	$ -
General Inpatient	0	$ -	$ -	0	$ -	$ -
TOTAL	**0**		**$ -**	**0**		**$ -**

SCHEDULE 3HME: CHARGES (HME APPLICANTS ONLY)

List the Type of Equipment to be Sold	FIRST YEAR			SECOND YEAR		
	Total Number of Units	Average Charge Per Unit	Total Gross Revenue	Total Number of Units	Average Charge Per Unit	Total Gross Revenue
	Col. 1	Col. 2	Col. 1 x Col. 2	Col. 1	Col. 2	Col. 1 x Col. 2
Respiratory Modalities						
	0	$ -	$ -	0	$ -	$ -
	0	$ -	$ -	0	$ -	$ -
	0	$ -	$ -	0	$ -	$ -
	0	$ -	$ -	0	$ -	$ -
Ambulation Aids						
	0	$ -	$ -	0	$ -	$ -
	0	$ -	$ -	0	$ -	$ -
	0	$ -	$ -	0	$ -	$ -
	0	$ -	$ -	0	$ -	$ -
Mobility Aids						
	0	$ -	$ -	0	$ -	$ -
	0	$ -	$ -	0	$ -	$ -
	0	$ -	$ -	0	$ -	$ -
	0	$ -	$ -	0	$ -	$ -
Sickroom Setup						
	0	$ -	$ -	0	$ -	$ -
	0	$ -	$ -	0	$ -	$ -
	0	$ -	$ -	0	$ -	$ -
	0	$ -	$ -	0	$ -	$ -
Disposable Supplies						
	0	$ -	$ -	0	$ -	$ -
	0	$ -	$ -	0	$ -	$ -
	0	$ -	$ -	0	$ -	$ -
	0	$ -	$ -	0	$ -	$ -
TOTAL	**0**		**$ -**	**0**		**$ -**

List the Type of Equipment to be Rented	FIRST YEAR			SECOND YEAR		
	Total Number of Units	Average Charge Per Unit	Total Gross Revenue	Total Number of Units	Average Charge Per Unit	Total Gross Revenue
	Col. 1	Col. 2	Col. 1 x Col. 2	Col. 1	Col. 2	Col. 1 x Col. 2
Respiratory Modalities						
	0	$ -	$ -	0	$ -	$ -
	0	$ -	$ -	0	$ -	$ -
Ambulation Aids						
	0	$ -	$ -	0	$ -	$ -
	0	$ -	$ -	0	$ -	$ -
Mobility Aids						
	0	$ -	$ -	0	$ -	$ -
	0	$ -	$ -	0	$ -	$ -
Sickroom Setup						
	0	$ -	$ -	0	$ -	$ -
	0	$ -	$ -	0	$ -	$ -
Disposable Supplies						
	0	$ -	$ -	0	$ -	$ -
	0	$ -	$ -	0	$ -	$ -
TOTAL	**0**		**$ -**	**0**		**$ -**

SCHEDULE 4: PROJECTED OPERATING REVENUE YEAR 1

Page 1 of 2 pages

	GROSS REVENUES (from Schedule 3)	PRIVATE PAY Col. 1	MEDICARE Col. 2	MEDICAID Col. 3	INSURANCE Col. 4	HMO/PPO Col. 5	OTHER Col. 6	TOTAL Col. 7
1	Home Health, Nurse Registry, Skilled Nursing, ALF, ICFDD, PPEC. and ADCC	$ 32,955	$ -	$ 186,745	$ -	$ -	$ -	$ 219,700
2	Health Care Clinics	$ -	$ -	$ -	$ -	$ -	$ -	$ -
3	Home Medical Equipment	$ -	$ -	$ -	$ -	$ -	$ -	$ -
4	Hospice	$ -	$ -	$ -	$ -	$ -	$ -	$ -
5	**TOTAL GROSS REVENUES**	$ 32,955	$ -	$ 186,745	$ -	$ -	$ -	$ 219,700
	DEDUCTIONS FROM REVENUE							
6	Contractual Adjustments	$ -	$ -	$ -	$ -	$ -	$ -	$ -
7	Charity Care	$ -	$ -	$ -	$ -	$ -	$ -	$ -
8	Cost of Goods Sold	$ -	$ -	$ -	$ -	$ -	$ -	$ -
9	Other	$ -	$ -	$ -	$ -	$ -	$ -	$ -
10	**TOTAL DEDUCTIONS FROM REVENUE**	$ -	$ -	$ -	$ -	$ -	$ -	$ -
11	**NET PATIENT SERVICE REVENUE**	$ 32,955	$ -	$ 186,745	$ -	$ -	$ -	$ 219,700
12	**OTHER OPERATING REVENUE**	$ -	$ -	$ -	$ -	$ -	$ -	$ -
13	**NET OPERATING REVENUE**	$ 32,955	$ -	$ 186,745	$ -	$ -	$ -	$ 219,700
14	Total Number of Patients/Residents	507	0	2873	0	0	0	3380
15	Total Hours/Visits/Days	10	0	55	0	0	0	65
16	Net Revenue Per Hour/Visit/Day	$ 3,380	$ -	$ 3,380	$ -	$ -	$ -	$ 3,380

If you are applying for Medicare and/or Medicaid certification enter the number of months you anticipate operating prior to receiving certification. **2 mos.**

Applicant Checklist

✓ Does Line 5, Total Patient Service Revenues, reconcile with Schedule 3 and 3HME?

✓ Is the Net Medicare and Medicaid Revenue per Hour/Visit/Day (Line 16, Column 2 and 3) consistent with current reimbursement rates?

___ Home Health Agencies that are applying for Medicaid and/or Medicare must complete Schedule 4.1.

SCHEDULE 4: PROJECTED OPERATING REVENUE YEAR 2

Page 2 of 2 pages

	GROSS REVENUES (from Schedule 3)	PRIVATE PAY Col. 1	MEDICARE Col. 2	MEDICAID Col. 3	INSURANCE Col. 4	HMO/PPO Col. 5	OTHER Col. 6	TOTAL Col. 7
1	Home Health, Nurse Registry, Skilled Nursing, ALF, ICFDD, PPEC. and ADCC	$ -	$ -	$ 439,400	$ -	$ -	$ -	$ 439,400
2	Health Care Clinics	$ -	$ -	$ -	$ -	$ -	$ -	$ -
3	Home Medical Equipment	$ -	$ -	$ -	$ -	$ -	$ -	$ -
4	Hospice	$ -	$ -	$ -	$ -	$ -	$ -	$ -
5	**TOTAL GROSS REVENUES**	$ -	$ -	$ 439,400	$ -	$ -	$ -	$ 439,400
	DEDUCTIONS FROM REVENUE							
6	Contractual Adjustments	$ -	$ -	$ -	$ -	$ -	$ -	$ -
7	Charity Care	$ -	$ -	$ -	$ -	$ -	$ -	$ -
8	Cost of Goods Sold	$ -	$ -	$ -	$ -	$ -	$ -	$ -
9	Other	$ -	$ -	$ -	$ -	$ -	$ -	$ -
10	**TOTAL DEDUCTIONS FROM REVENUE**	$ -	$ -	$ -	$ -	$ -	$ -	$ -
11	**NET PATIENT SERVICE REVENUE**	$ -	$ -	$ 439,400	$ -	$ -	$ -	$ 439,400
12	**OTHER OPERATING REVENUE**	$ -	$ -	$ -	$ -	$ -	$ -	$ -
13	**NET OPERATING REVENUE**	$ -	$ -	$ 439,400	$ -	$ -	$ -	$ 439,400
14	Total Number of Patients/Residents	0	0	6760	0	0	0	6760
15	Total Hours/Visits/Days	0	0	65	0	0	0	65
16	Net Revenue Per Hour/Visit/Day	$ -	$ -	$ 6,760	$ -	$ -	$ -	$ 6,760

Applicant Checklist

✓ Does Line 5, Total Patient Service Revenues reconcile with Schedule 3?

✓ Is the Net Medicare and Medicaid Revenue per Hour/Visit/Day (Line 16, Column 2 and 3) consistent with current reimbursement rates?

SCHEDULE 4.1: HOME HEALTH AGENCY PROJECTED OPERATING REVENUE YEAR 1

This Schedule is only to be completed by Home Health Agencies who will apply for Medicaid and Medicare certification.

Note: Medicare and Medicaid will not reimburse HHA for treatment of Medicaid and Medicare patients prior to certification, this process takes between four and six months and is not guaranteed. This Schedule is designed to show Medicare and Medicaid revenues by month and the reduction to revenues over the certification period. The adjusted net revenue from this schedule will be used on Schedule 6 year one.

Note: In order for an initial applicant to become Medicare and Medicaid certified, the applicant will have to seek accreditation with deemed status from one of three national accreditation organizations. Please provide a written estimate for the cost of accreditation with deemed status from one of the three national accreditation organizations (Community Health Accreditation Organization, The Joint Commission, and Accreditation Commission for Health Care). Also, please include and clearly identify the cost of the accreditation on Schedule 1.

		1	2	3	4	5	6	7	8	9	10	11	12	Total
Medicare														
1	New Episodes													$ -
2	Net Revenue (Sch 4, Col 2, Line 11)	$ -	$ -	$ -	$ -	$ -	$ -	$ -	$ -	$ -	$ -	$ -	$ -	$ -
3	Certification Period Reduction	$ -	$ -	$ -	$ -	$ -	$ -							$ -
4	Adjusted Net Revenue (Line 2 - Line 3)	$ -	$ -	$ -	$ -	$ -	$ -	$ -	$ -	$ -	$ -	$ -	$ -	$ -
Medicaid														
5	Number of Patients	0	0	0	0	0	0	0	0	0	0	0	0	$ -
6	Net Revenue (Sch 4, Col 3, Line 11)	$ -	$ -	$ -	$ -	$ -	$ -	$ -	$ -	$ -	$ -	$ -	$ -	$ -
7	Certification Period Reduction	$ -	$ -	$ -	$ -	$ -	$ -	$ -	$ -	$ -	$ -	$ -	$ -	$ -
8	Adjusted Net Revenue (Line 6 - Line 7)	$ -	$ -	$ -	$ -	$ -	$ -	$ -	$ -	$ -	$ -	$ -	$ -	$ -
All Other Payers														
17	Number of Patients	0	0	0	0	0	0	0	0	0	0	0	0	$ -
10	Net Rev. (Sch 4, Line 11, Col 1, 4, 5, & 6)	$ -	$ -	$ -	$ -	$ -	$ -	$ -	$ -	$ -	$ -	$ -	$ -	$ -
Total Adjusted Net Revenue (Line 4+8+10)		**$ -**	**$ -**	**$ -**	**$ -**	**$ -**	**$ -**	**$ -**	**$ -**	**$ -**	**$ -**	**$ -**	**$ -**	**$ -**

SCHEDULE 5: BALANCE SHEET

	END OF YEAR ONE		END OF YEAR TWO	
ASSETS				
Current Assets				
Cash		$ 47,519		$ 127,972
Inventory		500		500
Accounts Receivable		1,014		1,099
Notes Receivable				
Other: Prepaid Expense		853		-
		-		
Total Current Assets		**49,886**		**129,571**
Fixed and Other Assets				
Net Land and Buildings				
Equipment	$ 500		$ 500	
Less Acc. Depreciation	100		200	
Net Equipment		400		300
Other:	$ -		$ -	
Total Fixed and Other Assets		**400**		**300**
Total Assets		**$ 50,286**		**$ 129,871**
LIABILITIES AND NET ASSETS				
Current Liabilities				
Accounts Payable		$ 928		$ 928
Notes Payable				
Current Maturities of L.T. Debt				
Other:		-		-
Total Current Liabilities		**928**		**928**
Long-Term and Other Liabilities				
Mortgage Payable		-		-
Payable to Affiliates				
Other:				
Total Long-Term and Other Liabilities		**928**		**928**
Net Assets				
Common Stock		1,000		1,000
Additional Paid In Capital		79,273		79,273
Net Assets		-		-
Retained Earnings		(30,915)		48,670
Other:				
Total Net Assets		**49,358**		**128,943**
Total Liabilities and Net Assets		**$ 50,286**		**$ 129,871**
		-		0

Applicant Checklist

- ✓ Does the Cash, Inventory, Accounts Receivable, and Accounts Payable Balance reconcile with the Cash Flow Statement (Sch. 7)?
- ✓ Does Depreciation and Retained Earnings reconcile with the income statement?
- ✓ Did the applicant attach notes with the assumptions used for collecting receivables and paying payables?

SCHEDULE 6 - PROJECTED SUMMARY OF REVENUES AND EXPENSES

YEAR 1

	Month	1	2	3	4	5	6	7	8	9	10	11	12	TOTALS
NET OPERATING REVENUE														
1	Net Revenue From Sch 4 and Sch 4.1	2,817	5,633	8,450	11,267	14,083	16,900	19,717	22,533	25,350	28,167	30,983	33,800	219,700
EXPENSES:														
	ADMINISTRATION & OVERHEAD													
2	Salaries and Wages (Sch 2, Row 12)	3,120	3,120	3,120	3,120	3,120	3,120	3,120	3,120	3,120	3,120	3,120	3,120	37,440
3	Benefits	62	62	62	62	62	62	62	62	62	62	62	62	749
4	Rent	500	500	500	500	500	500	500	500	500	500	500	500	6,000
5	Utilities and Maintenance	50	50	50	50	50	50	50	50	50	50	50	50	600
6	License	71	71	71	71	71	71	71	71	71	71	71	71	853
7	Federal, State, & Local Taxes	858	858	858	858	858	858	858	858	858	858	858	858	10,302
8	Insurance, Liability & Other	2,867	2,867	2,867	2,867	2,867	2,867	2,867	2,867	2,867	2,867	2,867	2,867	34,400
9	Education and Training	-	-	-	-	-	-	-	-	-	-	-	-	-
10	Professional Fees	2,100	300	300	300	300	300	300	300	300	300	300	300	5,400
11	Interest	-	-	-	-	-	-	-	-	-	-	-	-	-
12	Repair & Maintenance	500	500	500	500	500	500	500	500	500	500	500	500	6,000
13	Bad Debts	-	-	-	-	-	-	-	-	-	-	-	-	-
14	Depreciation & Amortization	8	8	8	8	8	8	8	8	8	8	8	8	100
15	Other	-	-	-	-	-	-	-	-	-	-	-	-	-
16	Other	-	-	-	-	-	-	-	-	-	-	-	-	-
17	**TOTAL ADMIN. AND OVERHEAD**	$ 10,137	$ 8,337	$ 8,337	$ 8,337	$ 8,337	$ 8,337	$ 8,337	$ 8,337	$ 8,337	$ 8,337	$ 8,337	$ 8,337	$ 101,843
	SALARIES & WAGES (Sch 2 & 2.1)													
18	General Personnel (Sch 2, Row 18)	-	-	-	-	-	-	-	-	-	-	-	-	-
19	Health Care (Sch 2, Row 31)	7,800	7,800	7,800	7,800	7,800	7,800	7,800	7,800	7,800	7,800	7,800	7,800	93,600
20	Benefits	156	156	156	156	156	156	156	156	156	156	156	156	1,872
21	Mileage	-	-	-	-	-	-	-	-	-	-	-	-	-
22	Contract Gen. Per. (Sch 2.1, Row 6)	-	-	-	-	-	-	-	-	-	-	-	-	-
23	Cont. Health Care (Sch 2.1, Row 23)	542	542	542	542	542	542	542	542	542	542	542	542	6,500
24	Other	-	-	-	-	-	-	-	-	-	-	-	-	-
25	**TOTAL SALARIES & WAGES**	$ 8,498	$ 8,498	$ 8,498	$ 8,498	$ 8,498	$ 8,498	$ 8,498	$ 8,498	$ 8,498	$ 8,498	$ 8,498	$ 8,498	$ 101,972
	OTHER OPERATING EXPENSES													
26	Housekeeping	-	-	-	-	-	-	-	-	-	-	-	-	-
27	Laundry	-	-	-	-	-	-	-	-	-	-	-	-	-
28	Dietary	600	1,200	1,800	2,400	3,000	3,600	4,200	4,800	5,400	6,000	6,600	7,200	46,800
29	Other Ancillary	-	-	-	-	-	-	-	-	-	-	-	-	-
30	Medical Supplies	-	-	-	-	-	-	-	-	-	-	-	-	-
31	Other	-	-	-	-	-	-	-	-	-	-	-	-	-
32	Other	-	-	-	-	-	-	-	-	-	-	-	-	-
33	Other	-	-	-	-	-	-	-	-	-	-	-	-	-
34	**TOTAL OTHER OPERATING**	$ 600	$ 1,200	$ 1,800	$ 2,400	$ 3,000	$ 3,600	$ 4,200	$ 4,800	$ 5,400	$ 6,000	$ 6,600	$ 7,200	$ 46,800
35	**TOTAL OPERATING COSTS**	$ 19,235	$ 18,035	$ 18,635	$ 19,235	$ 19,835	$ 20,435	$ 21,035	$ 21,635	$ 22,235	$ 22,835	$ 23,435	$ 24,035	$ 250,615
36	**NET OPERATING INCOME (LOSS)**	$ (16,418)	$ (12,401)	$ (10,185)	$ (7,968)	$ (5,751)	$ (3,535)	$ (1,318)	$ 899	$ 3,115	$ 5,332	$ 7,549	$ 9,765	$ (30,915)
37	**OPERATING MARGIN%**	-582.88%	-220.14%	-120.53%	-70.72%	-40.84%	-20.91%	-6.68%	3.99%	12.29%	18.93%	24.36%	28.89%	-14.07%
38	**NON OPERATING REVENUES (NET)**	-	-	-	-	-	-	-	-	-	-	-	-	-
39	**INCOME OR (LOSS)**	$ (16,418)	$ (12,401)	$ (10,185)	$ (7,968)	$ (5,751)	$ (3,535)	$ (1,318)	$ 899	$ 3,115	$ 5,332	$ 7,549	$ 9,765	$ (30,915)

SCHEDULE 6 - PROJECTED SUMMARY OF REVENUES AND EXPENSES

YEAR 2

	Month	1	2	3	4	5	6	7	8	9	10	11	12	TOTALS
NET OPERATING REVENUE														
1	Net Revenue From Sch 4	36,617	36,617	36,617	36,617	36,617	36,617	36,617	36,617	36,617	36,617	36,617	36,617	439,400
EXPENSES:														
	ADMINISTRATION & OVERHEAD													
2	Salaries and Wages (Sch 2, Row 12)	3,120	3,120	3,120	3,120	3,120	3,120	3,120	3,120	3,120	3,120	3,120	3,120	37,440
3	Benefits	62	62	62	62	62	62	62	62	62	62	62	62	749
4	Rent	500	500	500	500	500	500	500	500	500	500	500	500	6,000
5	Utilities and Maintenance	50	50	50	50	50	50	50	50	50	50	50	50	600
6	License	71	71	71	71	71	71	71	71	71	71	71	71	853
7	Federal, State, & Local Taxes	858	858	858	858	858	858	858	858	858	858	858	858	10,302
8	Insurance, Liability & Other	2,867	2,867	2,867	2,867	2,867	2,867	2,867	2,867	2,867	2,867	2,867	2,867	34,400
9	Education and Training	-	-	-	-	-	-	-	-	-	-	-	-	-
10	Professional Fees	2,100	300	300	300	300	300	300	300	300	300	300	300	5,400
11	Interest	-	-	-	-	-	-	-	-	-	-	-	-	-
12	Repair & Maintenance	500	500	500	500	500	500	500	500	500	500	500	500	6,000
13	Bad Debts	-	-	-	-	-	-	-	-	-	-	-	-	-
14	Depreciation & Amortization	8	8	8	8	8	8	8	8	8	8	8	8	100
15	Other	-	-	-	-	-	-	-	-	-	-	-	-	-
16	Other	-	-	-	-	-	-	-	-	-	-	-	-	-
17	**TOTAL ADMIN. AND OVERHEAD**	$ 10,137	$ 8,337	$ 8,337	$ 8,337	$ 8,337	$ 8,337	$ 8,337	$ 8,337	$ 8,337	$ 8,337	$ 8,337	$ 8,337	$ 101,843
	SALARIES & WAGES (Sch 2 & 2.1)													
18	General Personnel (Sch 2, Row 18)	-	-	-	-	-	-	-	-	-	-	-	-	-
19	Health Care (Sch 2, Row 31)	13,000	13,000	13,000	13,000	13,000	13,000	13,000	13,000	13,000	13,000	13,000	13,000	156,000
20	Benefits	156	156	156	156	156	156	156	156	156	156	156	156	1,872
21	Mileage													-
22	Contract Gen. Per. (Sch 2.1, Row 6)	-	-	-	-	-	-	-	-	-	-	-	-	-
23	Cont. Health Care (Sch 2.1, Row 23)	542	542	542	542	542	542	542	542	542	542	542	542	6,500
24	Other	-	-	-	-	-	-	-	-	-	-	-	-	-
25	**TOTAL SALARIES & WAGES**	$ 13,698	$ 13,698	$ 13,698	$ 13,698	$ 13,698	$ 13,698	$ 13,698	$ 13,698	$ 13,698	$ 13,698	$ 13,698	$ 13,698	$ 164,372
	OTHER OPERATING EXPENSES													
26	Housekeeping	-	-	-	-	-	-	-	-	-	-	-	-	-
27	Laundry	-	-	-	-	-	-	-	-	-	-	-	-	-
28	Dietary	-	-	-	-	-	-	-	-	-	-	-	-	-
29	Other Ancillary	-	-	-	-	-	-	-	-	-	-	-	-	-
30	Medical Supplies	7,800	7,800	7,800	7,800	7,800	7,800	7,800	7,800	7,800	7,800	7,800	7,800	93,600
31	Other	-	-	-	-	-	-	-	-	-	-	-	-	-
32	Other	-	-	-	-	-	-	-	-	-	-	-	-	-
33	Other	-	-	-	-	-	-	-	-	-	-	-	-	-
34	**TOTAL OTHER OPERATING**	$ 7,800	$ 7,800	$ 7,800	$ 7,800	$ 7,800	$ 7,800	$ 7,800	$ 7,800	$ 7,800	$ 7,800	$ 7,800	$ 7,800	$ 93,600
35	**TOTAL OPERATING COSTS**	$ 31,635	$ 29,835	$ 29,835	$ 29,835	$ 29,835	$ 29,835	$ 29,835	$ 29,835	$ 29,835	$ 29,835	$ 29,835	$ 29,835	$ 359,815
36	**NET OPERATING INCOME (LOSS)**	$ 4,982	$ 6,782	$ 6,782	$ 6,782	$ 6,782	$ 6,782	$ 6,782	$ 6,782	$ 6,782	$ 6,782	$ 6,782	$ 6,782	$ 79,585
37	**OPERATING MARGIN%**	13.61%	18.52%	18.52%	18.52%	18.52%	18.52%	18.52%	18.52%	18.52%	18.52%	18.52%	18.52%	18.11%
38	**NON OPERATING REVENUES (NET)**	-	-	-	-	-	-	-	-	-	-	-	-	-
39	**INCOME OR (LOSS)**	$ 4,982	$ 6,782	$ 6,782	$ 6,782	$ 6,782	$ 6,782	$ 6,782	$ 6,782	$ 6,782	$ 6,782	$ 6,782	$ 6,782	$ 79,585

Schedule 7 PROJECTED CASH FLOW STATEMENT for year one ending

	Month	1	2	3	4	5	6	7	8	9	10	11	12	TOTALS
1	**Net Operating Income (Sch. 6, Line 39)**	$ (16,417.92)	$ (12,401.26)	$ (10,184.59)	$ (7,967.92)	$ (5,751.26)	$ (3,534.59)	$ (1,317.92)	$ 898.74	$ 3,115.41	$ 5,332.08	$ 7,548.75	$ 9,765.41	$ (30,915.06)
	ADD: items that decrease income but do not decrease cash:													
2	Depreciation/Amortization	8	8	8	8	8	8	8	8	8	8	8	8	100
3	Increase in Accounts Payable	928	928	928	928	928	928	928	928	928	928	928	928	11,138
4	Decrease in Accounts Receivable	-	-	7,183	254	338	423	507	592	676	761	845	930	12,506
5	Other: Prepaid Expenses	71	71	71	71	71	71	71	71	71	71	71	71	853
6	Other: Expenses included line 14	1,800												1,800
7	**TOTAL ADDITIONS (lines 2-6)**	$ 2,807.58	$ 1,007.58	$ 8,190.08	$ 1,261.08	$ 1,345.58	$ 1,430.08	$ 1,514.58	$ 1,599.08	$ 1,683.58	$ 1,768.08	$ 1,852.58	$ 1,937.08	$ 26,396.90
	DEDUCT: items that increase income but do not increase cash:													
8	Increase in Accounts Receivable	2,394	4,788	254	338	423	507	592	676	761	845	930	1,014	13,520
9	Decrease in Accounts Payable	-	928	928	928	928	928	928	928	928	928	928	928	10,210
10	Other _____	-	-	-	-	-	-	-	-	-	-	-	-	-
11	Other _____	-	-	-	-	-	-	-	-	-	-	-	-	-
12	**TOTAL DEDUCTIONS (lines 8-11)**	$ 2,394.17	$ 5,716.53	$ 1,181.70	$ 1,266.20	$ 1,350.70	$ 1,435.20	$ 1,519.70	$ 1,604.20	$ 1,688.70	$ 1,773.20	$ 1,857.70	$ 1,942.20	$ 23,730.20
13	**Cash Flows from Operations (lines 1 plus 7 less 12)**	$ (16,004.51)	$ (17,110.21)	$ (3,176.21)	$ (7,973.05)	$ (5,756.38)	$ (3,539.71)	$ (1,323.05)	$ 893.62	$ 3,110.29	$ 5,326.95	$ 7,543.62	$ 9,760.29	$ (28,248.36)
	Other Uses of Cash													
14	Pre-Opening Cost (Sch1 line 14)	$ 4,505.00												4,505
15	Purchase of Equipment	-												-
16	Change in Inventory	-												-
17	Repayment of Principle on Loan	-	-	-										-
18	Other Non-Operating Uses	-												-
19	**Total Other Uses of Cash (14-18)**	$ 4,505.00	$ -	$ -	$ -	$ -	$ -	$ -	$ -	$ -	$ -	$ -	$ -	$ 4,505.00
20	**Total Cash Needs (19 minus 13)**	$ 20,509.51	$ 17,110.21	$ 3,176.21	$ 7,973.05	$ 5,756.38	$ 3,539.71	$ 1,323.05	$ (893.62)	$ (3,110.29)	$ (5,326.95)	$ (7,543.62)	$ (9,760.29)	$ 32,753.36
21	**Cumulative Cash Needs (Line 20 this month plus line 21 last month)**	$ 20,509.51	$ 37,619.73	$ 40,795.94	$ 48,768.99	$ 54,525.37	$ 58,065.08	$ 59,388.13	$ 58,494.51	$ 55,384.22	$ 50,057.27	$ 42,513.65	$ 32,753.36	
22	**Beginning Cash on Hand (ending cash last month line 28)**	$ 80,272.72	$ 59,763.20	$ 42,652.99	$ 39,476.78	$ 31,503.73	$ 25,747.35	$ 22,207.64	$ 20,884.59	$ 21,778.21	$ 24,888.50	$ 30,215.45	$ 37,759.07	$ 80,272.72
	OTHER SOURCES OF CASH													
23	Cash from Non-Related Loans	$ -												-
24	Cash from Owners/Investors													-
25	From Parent or Affiliated Entities													-
26	Other non-operating sources													-
27	**Total Other Sources of Cash (23-26)**	$ -	$ -	$ -	$ -	$ -	$ -	$ -	$ -	$ -	$ -	$ -	$ -	$ -
28	**CASH AVAILABLE AT END OF MONTH (line 27 plus 22 minus 20)**	$ 59,763.20	$ 42,652.99	$ 39,476.78	$ 31,503.73	$ 25,747.35	$ 22,207.64	$ 20,884.59	$ 21,778.21	$ 24,888.50	$ 30,215.45	$ 37,759.07	$ 47,519.36	$ 47,519.36

Schedule 7 PROJECTED CASH FLOW STATEMENT for year two ending

	Month	1	2	3	4	5	6	7	8	9	10	11	12	TOTALS
1	**Net Operating Income (Sch. 6, Line 39)**	$ 4,982.08	$ 6,782.08	$ 6,782.08	$ 6,782.08	$ 6,782.08	$ 6,782.08	$ 6,782.08	$ 6,782.08	$ 6,782.08	$ 6,782.08	$ 6,782.08	$ 6,782.08	$ 79,584.94
	ADD: items that decrease income but do not decrease cash:													
2	Depreciation/Amortization	8	8	8	8	8	8	8	8	8	8	8	8	100
3	Increase in Accounts Payable	928	928	928	928	928	928	928	928	928	928	928	928	11,138
4	Decrease in Accounts Receivable	1,014	1,099	1,099	1,099	1,099	1,099	1,099	1,099	1,099	1,099	1,099	1,099	13,098
5	Other Prepaid Expenses	71	71	71	71	71	71	71	71	71	71	71	71	853
6	Other _____													-
7	**TOTAL ADDITIONS (lines 2-6)**	$ 2,021.58	$ 2,106.08	$ 2,106.08	$ 2,106.08	$ 2,106.08	$ 2,106.08	$ 2,106.08	$ 2,106.08	$ 2,106.08	$ 2,106.08	$ 2,106.08	$ 2,106.08	$ 25,188.40
	DEDUCT: items that increase income but do not increase cash:													
8	Increase in Accounts Receivable	1,099	1,099	1,099	1,099	1,099	1,099	1,099	1,099	1,099	1,099	1,099	1,099	13,182
9	Decrease in Accounts Payable	928	928	928	928	928	928	928	928	928	928	928	928	11,138
10	Other _____	-	-	-	-	-	-	-	-	-	-	-	-	-
11	Other _____	-	-	-	-	-	-	-	-	-	-	-	-	-
12	**TOTAL DEDUCTIONS (lines 8-11)**	$ 2,026.70	$ 2,026.70	$ 2,026.70	$ 2,026.70	$ 2,026.70	$ 2,026.70	$ 2,026.70	$ 2,026.70	$ 2,026.70	$ 2,026.70	$ 2,026.70	$ 2,026.70	$ 24,320.40
13	**Cash Flows from Operations (lines 1 plus 7 less 12)**	$ 4,976.95	$ 6,861.45	$ 6,861.45	$ 6,861.45	$ 6,861.45	$ 6,861.45	$ 6,861.45	$ 6,861.45	$ 6,861.45	$ 6,861.45	$ 6,861.45	$ 6,861.45	$ 80,452.94
	Other Uses of Cash													
14	Pre-Opening Cost (Sch1 line 14)	-												-
15	Purchase of Equipment	-												-
16	Change in Inventory	-												-
17	Repayment of Principle on Loan													-
18	Other Non-Operating Uses	-												-
19	**Total Other Uses of Cash (14-18)**	$ -	$ -	$ -	$ -	$ -	$ -	$ -	$ -	$ -	$ -	$ -	$ -	$ -
20	**Total Cash Needs (19 minus 13)**	$ (4,976.95)	$ (6,861.45)	$ (6,861.45)	$ (6,861.45)	$ (6,861.45)	$ (6,861.45)	$ (6,861.45)	$ (6,861.45)	$ (6,861.45)	$ (6,861.45)	$ (6,861.45)	$ (6,861.45)	$ (80,452.94)
21	**Cumulative Cash Needs (Line 20 this month plus line 21 last month)**	$ 27,776.41	$ 20,914.95	$ 14,053.50	$ 7,192.05	$ 330.59	$ (6,530.86)	$ (13,392.31)	$ (20,253.77)	$ (27,115.22)	$ (33,976.67)	$ (40,838.13)	$ (47,699.58)	
22	**Beginning Cash on Hand (ending cash last month line 28)**	$ 47,519.36	$ 52,496.31	$ 59,357.76	$ 66,219.22	$ 73,080.67	$ 79,942.12	$ 86,803.58	$ 93,665.03	$ 100,526.48	$ 107,387.94	$ 114,249.39	$ 121,110.84	$ 47,519.36
	OTHER SOURCES OF CASH													
23	Cash from Non-Related Loans													-
24	Cash from Owners/Investors													-
25	From Parent or Affiliated Entities													-
26	Other non-operating sources													-
27	**Total Other Sources of Cash (23-26)**	$ -	$ -	$ -	$ -	$ -	$ -	$ -	$ -	$ -	$ -	$ -	$ -	$ -
28	**CASH AVAILABLE AT END OF MONTH (line 27 plus 22 minus 20)**	$ 52,496.31	$ 59,357.76	$ 66,219.22	$ 73,080.67	$ 79,942.12	$ 86,803.58	$ 93,665.03	$ 100,526.48	$ 107,387.94	$ 114,249.39	$ 121,110.84	$ 127,972.30	$ 127,972.30

THERAPEUTIC ASSISTED LIVING CORP.
SUMMARY OF SIGNIFICANT PROJECTION ASSUMPTIONS
August 2026 through 2028

NOTE 1 BUSINESS DESCRIPTION AND BASIS OF PRESENTATION

Business Description

Therapeutic Assisted Living Corp. (the "Home Health Business", the “Applicant”, or the “Company”, or the "Business"), a Florida Limited Liability Company, is acquiting an Adult Day Care.

Basis of Presentation

The financial projection (the “Projection”) presents, to the best of the knowledge and belief of management (“Management”) of the Applicant, the expected results of operations and cash flows for the initial application period and the years ending: **August 2026 through 2028** (the “Projection Period”).

The Projection has been prepared for purposes of obtaining licensure and is not intended to be a complete presentation of legal entity, its assets and liabilities, nor of its revenues and expenses.

The presentation using AHCA prescribed form # 3100-0009, July 2009 as designed and prescribed by AHCA to meet its needs, and there is a presumption that the required information is sufficient to provide information for the anticipated provider’s revenue and expenditures, the basis for financing anticipated cash-flow requirements of the provider, and an applicant’s access to contingency financing to be presented with AHCA. Accordingly, this projection may not be useful for other purposes.

A projection although similar to a forecast, is a presentation of prospective financial information that is subject to one or more hypothetical assumptions. Management has included several assumptions that are considered to be hypothetical assumptions.

Management’s hypothetical assumptions (the “Hypothetical Assumptions”) are as follows:

The Applicant is able to obtain all regulatory approvals; the Applicant is able to achieve the occupancy, payer mix, and average rates; the Applicant is able to maintain its projected operating structure and limit the additional expenses associated with operating the facility.

Accordingly, the Projection reflects Management’s judgement as of the date of the Projection, of the expected conditions and its expected course of action assuming the Hypothetical Assumptions. The assumptions disclosed herein, while not all-inclusive, are the assumptions which Management believes are significant to the Projection. The prospective results may not be achieved. Furthermore, even if the Hypothetical Assumptions were to occur, there will usually be differences between the projected and actual results, because events and circumstances frequently do not occur as expected, and those differences may be material.

NOTE 2 SUMMARY OF SIGNIFICANT ACCOUNTING POLICIES

Basis of Accounting

The Company maintains its accounting and financial records according to the accrual basis of accounting.

Use of Estimates

Estimates are used for, but not limited to, revenue, goodwill and asset impairments, self-insurance reserves, performance-based compensation, the allowance for credit losses, depreciation and amortization, leasing transactions, income taxes, and other contingencies. Although these estimates are based on management's best knowledge of current events and actions that the Company may undertake in the future, actual results may differ from the original estimates.

Cash and Cash Equivalents

The Company considers all short-term debt securities purchased with an original maturity of three months or less to be cash or cash equivalents.

Property, Plant and Equipment and Leasehold Intangibles, Net:

Property, plant and equipment and leasehold intangibles, net is recorded at cost. Depreciation and amortization are computed using the straight-line method over the estimated useful lives of the assets.

Expenditures for ordinary maintenance and repairs are expensed to operations as incurred. Renovations and improvements, which improve and/or extend the useful life of the asset, are capitalized, and depreciated over the estimated useful life of the renovations or improvements.

All tangible property with a useful life of more than one year and a unit acquisition cost of $2,500 or more will be capitalized and depreciated over its useful life using the straight-line method of depreciation. The company will expense the full acquisition cost of tangible property below these thresholds in the year of purchase.

Revenues Patient Fees:

Fees revenue is reported at the amount that reflects the consideration the Company expects to receive in exchange for the services provided. These amounts are due from patients or third-party payors and include variable consideration for retroactive adjustments from estimated reimbursements, if any, under reimbursement programs. Performance obligations are determined based on the nature of the services provided. Patients fee revenue is recognized as performance obligations are satisfied.

Gain (Loss) on Sale of Assets

The Company recognizes gain or loss from the sale of equity method investments when the transfer of control is complete, and the Company has no continuing involvement with the transferred financial assets.

Accounts Receivable:

Revenues are recorded at established rates in the period during which services are rendered. When there is a timing difference between revenues earned or incurred and collected, this timing difference is accounted for by recording receivables Accounts receivable are reported net of an allowance for credit losses to represent the Company's estimate of inherent losses at the balance sheet date.

Accounts Payable:

Expenses are recorded in the period in which is accrued and/or an invoice from the vendor is received. When there is a timing difference between expenses accrued or incurred and paid, this timing difference is accounted for by recording an Account Payable or a similar Payable Account.

Income Taxes:

Therapeutic Assisted Living Corp is a Florida Corporation, treated as an S-Corp for tax purposes. Under the provisions of the Internal Revenue Code and comparable state income tax law. As such, the Company is generally not subject to income taxes and the Company's net income, or loss is reported on the individual tax return of the members of the Company. Therefore, no provision or liability for income taxes is reflected in the financial statements.

Projected Pre-Opening Costs Assumptions:

The rented real estate property is in compliance with the codes and requirements of the county and the agency to operate as a Adult Day Care.

Fixtures, office/business equipment, furniture, appliances, inventory, merchandise, supplies, and any other asset of value that is intrinsic and extrinsic to said business will remain in the premises and used for business purposes.

NOTE 3 MANAGEMENT'S BASIS FOR PROJECTION OF REVENUES AND EXPENSES

Projected Charges Per Month Per Patient

Projected revenue consists of revenue from operating the Business. Future years were projected utilizing assumptions of average cost of care. The Facility will rely on Referral Agencies, Doctor's offices, Rehabilitation Centers, and Hospitals to acquire patients.

Employees

Personnel may allocate time to different roles and responsibilities. A full time equivalent employee ("FTE") is assumed to represent 2,080 hours of time paid annually. Employees will be hired using online recruiting services and/or agencies.

Rents and Leases:

The Company will lease the real estate from Flager County.

No Purchase Price: $0.00

The Adult Day Care is currently being operated by the Flager County and is will be transferred through a bidding process to the most competitive bidder.

THERAPEUTIC ASSISTED LIVING CORP.
AHCA PROOF OF FINANCIAL ABILITY TO OPERATE
Cash Needs & Source of Funds: Presentation of Proof of Fundings

The agency might require supporting documents, including but not limited to:

Proof of Funding Documents to Provide	**Amount (Min.)**
Minimum Cash Needs: Bank statements, letters of commitment, Invoices and Payment Confirmations, Other.	$ 80,273

THERAPEUTIC ASSISTED LIVING CORP.

AHCA PROOF OF FINANCIAL ABILITY TO OPERATE

For Health Care Licensing Application

THERAPEUTIC ASSISTED LIVING CORP.
AHCA PROOF OF FINANCIAL ABILITY TO OPERATE
TABLE OF CONTENTS

Accountant's Disclaimer	**I**
Prescribed Form "Proof of Financial Ability to Operate"	1
Summary of Significant Assumptions and Selected Supplementary Information	19

REG & ADVISORS, CPA, PA

Tax | Accounting | Advisory

ACCOUNTANT'S DISCLAIMER

To Management

THERAPEUTIC ASSISTED LIVING CORP.

The accompanying projected financial statements (presented on prescribed form "Proof of Financial Ability to Operate") of **Therapeutic Assisted Living Corp.** and selected notes, were not subjected to an audit, review, or compilation engagement by us and we do not express an opinion, a conclusion, nor provide any assurance on them.

The prescribed form is designed by the Agency for Health Care Administration (AHCA) to meet its needs, and there is a presumption that the required information is sufficient to demonstrate the anticipated provider's revenue and expenditures, the basis for financing anticipated cash-flow requirements of the provider, and an applicant's access to contingency financing to be presented with AHCA. Accordingly, this projection may not be useful for other purposes.

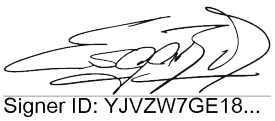

Signer ID: YJVZW7GE18...

REG & Advisors, CPA, PA
Miami, Florida
August 23, 2026

Health Care Licensing Application
PROOF OF FINANCIAL ABILITY TO OPERATE
INSTRUCTIONS

Authority: The following Schedules are designed to meet the specific requirements of 408.810(8), 408.8065(1), and 400.471, Florida Statutes which require the applicant to show anticipated provider revenue and expenditures, the basis for financing anticipated cash-flow requirements of the provider, and an applicant's access to contingency financing. All schedules must be prepared in accordance with generally accepted accounting principles (GAAP). A Certified Public Accountant must compile, examine, or apply agreed-upon procedures to prospective financial statements, including summaries of significant assumptions and accounting policies. An applicant will have demonstrated financial ability to operate by completing proof of financial ability to operate schedules 1-7 in conformity with the below instructions and GAAP, all relevant rules and statutes, and projections that show assets, credit, and projected revenues meet or exceed projected liabilities and expenses and Independent evidence of sufficient funds for start up, working capital & contingencies.

These forms must accompany any ***initial or change of ownership (CHOW) application*** for the following health care provider types:

Adult Day Care Centers (ADCC)	Health Care Clinics
Assisted Living Facilities (ALF)	Home Health Agencies
Intermediate Care Facilities for the Developmentally Disabled (ICFDD)	Hospice
Prescribed Pediatric Extended Care Center (PPEC)	Home Medical Equipment
	Skilled Nursing Facilities

General Instructions – As an all inclusive set of schedules, some of the individual detailed items in these forms may not apply to all provider types listed above. For example, Schedule 3 has an item for Room & Board revenue. This line would be appropriate for residential facilities like skilled nursing or ALF but would not apply to agencies such as home health. In the schedule where the option for hours or visits or days is presented, the applicant may use the metric that is appropriate for the agency. For example, hours are appropriate for home health; visits is appropriate for health care clinics; and days is appropriate for skilled nursing facilities. Several of the schedules include check lists to assist the preparer in completing these forms.

Assumptions Used – Schedules 1-7 reflect the anticipated results of future operations. Since these schedules are forward looking, the applicant will have to make certain assumptions about future patients, revenues, and expenses. The assumptions an applicant uses are essential in developing a projected set of financial schedules. The applicant, at a minimum, must provide assumptions about the number and types of patients it will provide services to, how it plans on acquiring those patients, the staffing required to provide service to those patients, how it plans on recruiting the necessary staffing, and its method of estimating accounts receivable and payable as discussed in the instructions for Schedule 5. All assumptions used in the projections must be contained in accompanying notes to the projections and all assumptions must be consistent with existing rules and statutes governing minimum staffing requirements and any other requirements that would have a financial impact on the applicant. **Home Health Agencies Only** - Section 400.471(2)(d), Florida Statutes, requires a business plan, signed by the applicant, which details the home health agency's methods to obtain patients and its plan to recruit and maintain staff. At a minimum the plan should include a description of the business, services to be provided, the existing market, the level of competition in the market, the applicant's strategy to enter the market (obtain patients), a time-line of major events (for example, expected date of licensure, certification, etc.), the applicant's strategy to recruit and maintain personnel, and a description of the applicant's admission policy.

Schedule 1: Estimated Provider Costs and Source of Funds - The purpose of this Schedule is to disclose ALL costs needed to begin operations (or resume operations in the case of a CHOW) including all pre-opening costs prior to beginning operations, funding for contingencies, and the funds necessary to sustain the operations until it reaches a positive cash flow. The sources of the funding must be listed and independent, certifiable documentation of the existence and availability of those funds must be provided. All funding must be supported by evidence that the entity owns or will have access to funds as needed. Examples of documents that support funding includes copies of bank statements for accounts owned by the proposed entity, a letter of commitment from a bank or other independent lending sources, a copy of a line of credit agreement established for the proposed entity (including the available balance), and any other liquid assets. Liquid assets are defined as assets that can easily and quickly be converted to cash. Funding provided by the corporate parent of a proposed entity must be supported with a letter from the parent indicating that such funds are available to the applicant and independent, certifiable documentation of the existence and availability of those funds as defined above. The most recent Audited Financial Statements of the parent will be considered proof of the parent's ability to fund the applicant unless the parent's Audited Financial Statements indicate that current liabilities are greater than current assets and/or long-term debt exceeds net assets, and/or the audit contains a going concern issue. In the case of the purchase price associated with a change of ownership, the executed bill of sale is acceptable proof of funding the purchase price. The proof of funding for contingencies must include a signed statement from the applicant which identifies the source of contingency funding and guarantying that the contingency funding will be made available to handle extraordinary occurrences that would have a financial impact such as major repairs, purchase of capital equipment, a decrease in patient days, etc. All proof of funding documentation must be dated no later than ten (10) days prior to the date the application is received by AHCA. Attach any other supplementary documentation and/or explanations as needed. For additional instruction follow the checklist at the bottom of Schedule 1.

Schedule 2 and 2.1: Staffing Requirements - The purpose of Schedule 2 is to present the total number of Full Time Equivalent employees (FTEs) projected to staff the operation and convert these FTEs to the total annual salary cost. An employee working only 20 hours a week would be shown as .5 FTE. A full-time employee not hired until the last 3 months of the year would be shown as .25 FTE. The last column for each year is the product of the number of FTEs times the average annual salary per FTE. Schedule 2 is for direct employees only (employees that have payroll taxes withheld from their pay). Schedule 2.1 is for contracted employees. The staffing presented should be consistent with the respective authoritative rules and statutes regarding minimum staffing required. The combined staffing hours on Schedule 2 and 2.1 must be equal to or in excess of the hours needed to provide the services billed on Schedule 3. In addition, the applicant must provide documentation supporting the salary levels for each position. Documentation supporting salary levels may include, labor market studies, industry published averages, signed statements from individuals agreeing to the projected salary, etc. For additional instructions refer to the checklist provided at the bottom of the page on the Schedule 2 and 2.1.

Schedule 3: Hours and Charges - The purpose of this Schedule is to disclose the estimated number of service hours, visits, or days (as appropriate for the provider type) along with the amount charged per hour, visit, or day for the first and second year of operations. Revenue on this schedule must reconcile with Total Gross Revenues on Schedule 4 Line 5, Column 7. Because the method and type of reimbursement varies among different providers, the following subsections were developed to better reconcile with the provider type:

Part A: Must be completed by Home Health, Nurse Registry, Skilled Nursing, ALF, ICFDD, PPEC, and ADCC Only. Home Health applicants must also complete Schedule 4.1 if applying for Medicare and Medicaid Certification.

Part B: Must be completed by Health Care Clinic Applicants only.

Part C: Must be completed by Hospice Applicants only.

All revenue methods will not easily relate to this form, however, please make your best estimates. Attach notes of explanation as needed.

Schedule 3HME: - The purpose of this schedule is the same as the purpose for Schedule 3; however, it has been specifically designed for home medical equipment applicants. This Schedule must be completed by Home Medical Equipment Applicants.

Schedule 4: Projected Operating Revenue - The purpose of this form is to present revenues by payer category. The Total Gross Revenues (Line 5, Column 7) must reconcile with Schedule 3 and 3HME. Often times Medicare, Medicaid, and HMOs may reimburse the agency at a different rate than the charges listed on Schedule 3. The difference must be accounted for as a contractual adjustment on Line 6. HME providers and any other providers selling medical equipment must record cost of goods sold on Line 8.

Use either hours, visits or days as appropriate for the provider type. Medicare and Medicaid net revenues must be consistent with the most recently approved reimbursement methodologies. The hours, visits, or days section of this schedule does not apply to HME applicants.

Schedule 4.1: Supplementary Home Health Agency Schedule - If a Home Health applicant indicates in the application that it is applying for Medicare and/or Medicaid certification and/or the applicant includes Medicare and/or Medicaid revenue on Schedule 4, then the Home Health Agency applicant must complete this schedule. The purpose of this schedule is to address the certification process for Medicare and Medicaid. Home Health Agencies are required to be operational and have at least 10 skilled patients prior to being surveyed by Medicare and Medicaid. Approval is not guaranteed and takes approximately six months to complete. The applicant will not receive reimbursement from Medicare or Medicaid for treatment of Medicare and Medicaid patients prior to certification. In order for an initial applicant to become Medicare and Medicaid certified, the applicant will have to seek accreditation with deemed status from one of three national accreditation organizations. You must provide a written estimate for the cost of accreditation with deemed status from one of the three national accreditation organizations (Community Health Accreditation Organization, The Joint Commission, and Accreditation Commission for Health Care) and include and clearly identify the cost of the accreditation in the projected financial schedules. If the applicant is projecting Medicare and Medicaid revenues prior to anticipated certification, an adjustment must be made on this schedule to remove the Medicare and Medicaid revenues prior to certification (Certification Period Reduction). The Total Net Adjusted Revenue from this schedule must be used on Schedule 6, Line 1, year one instead of the Schedule 4 Net Revenue (Col. 7, Line 13).

Schedule 5: Balance Sheet – The balance sheet is ultimately the results of the projections on Schedule 6 (Income Statement) and Schedule 7 (Cash Flow Statement) and must reconcile with those schedules. The applicant must provide notes with an explanation of the assumptions used for collection of revenues and the paying of expenses. Particularly, the assumptions for payment of rent which typically is paid at the beginning of a month; the payment of salaries, which may be weekly, bi-weekly, or monthly; all of which impact payables differently. The assumptions presented for receivables and payables have a direct impact on the cash flow statement and must be consistently applied when completing the cash flow statement.

Schedule 6: Projected Summary of Revenues and Expenses – The Schedule is designed to show the projected profitability of the applicant. The revenues on this schedule must reconcile with Schedule 4 and 4.1. Administrative, direct, and contracted salaries expense on this schedule must reconcile with Schedule 2 and 2.1. This schedule must included taxes and benefits for direct employees and interest expense on funds borrowed (as indicated on Schedule 1). The monthly salary allocations must be sufficient to meet all minimum staffing requirements including the staffing required to generate the monthly revenue allocated. This schedules must included allocations for utilities (phone, electric, etc), supplies (office and medical), and all other costs expected to be incurred in the normal course of business. If costs are to be shared with an affiliate or parent company, then this schedule should include the applicant's share of those costs. If this is a new entity, the revenue projections must reflect the applicant's assumptions on the growth of patients/ residents expected. Simply dividing year end revenues by 12-months will not be considered a reasonable assumption for a new entity. Existing entities applying for a CHOW may be expected to have a more stable month to month revenue stream. Fixed costs such as rent and administrative overhead must be relatively consistent from month to month while variable cost such as patient care must be proportional to the revenue earned in any one month (matching principle).

The applicant must provide documentation in the form of leases and insurance quotes in support of the rent and insurance expenses projected. **For initial applicants only, financial projections that project a year one operating margin (Schedule 6, Line 36 divided by Schedule 6, Line 1) or any monthly operating margin in year one of 15 percent or greater will be deemed unreasonable and the applicant will be found to have not met its proof of financial ability to operate.**

Schedule 7: Projected Cash Flow Statement – This schedule is designed to determine the working capital needs of the applicant. Line 1 must equal Schedule 6, Line 39. Lines 2 through 12 must reconcile with the income statement and balance sheet and must be consistent with the applicant's assumptions. Line 13 must equal (Line 1 plus Line 7 less Line 12). In year one month one, Line 14 must equal Total Pre-Opening Cost from Schedule 1 Line 14. If the applicant is projecting any capital additions, then the cost of those additions must be included on this schedule. If the applicant is projecting repaying loan principle, then principle repayments must be included on this schedule.

Total Cash Needs - Line 20, Total Cash Needs, is the total of Line 19 - Total Other Uses of Cash, plus Cash Flows from Operations, Line 13. A positive cash flow on Line 13 is subtracted from Line 19. If the positive cash flow is greater than the other uses, the net positive cash needs will be shown as a negative on line 20.

Cumulative Cash Need - Line 21, Cumulative Cash needs, is the running total of last month's cumulative cash needs (Line 21 from last month plus the Total Cash Needs from Line 20 for the current month). If the Total Cash Needs this month is a negative amount meaning a positive cash contribution, it would be subtracted from the cumulative cash amount from last month. The highest monthly amount on Line 21 (considering both year one and year two) will be entered on Schedule 1 as Working Capital. Year 2, month 1 uses year 1, month 12 for its cumulative beginning.

FLORIDA AGENCY FOR HEALTH CARE ADMINISTRATION

Health Care Licensing Application
PROOF OF FINANCIAL ABILITY TO OPERATE

Authority: Pursuant to subsection 408.810(8) and 400.471, Florida Statutes, upon application for initial licensure or change of ownership licensure, the applicant shall furnish satisfactory proof of the applicant's financial ability to operate in accordance with the requirements of this part, authorizing statutes and applicable rules.

The following provider types are **required** to submit this form: Assisted Living Facilities, Adult Day Care Centers, Hospice, Intermediate Care Facilities for the Developmentally Disabled, Prescribed Pediatric Extended Care Centers, Health Care Clinics, Home Health Agencies, Home Medical Equipment providers, Nurse Registries and Skilled Nursing Facilities.

Provider/Facility Type:			
License # (for change of ownership applications):			
Provider Name: Therapeutic Assisted Living Corp.		Telephone Number: 386-586-2324	
Street Address: 1000 Belle Terre blvd		Fax Number: 844-769-0772	
City: Palm Coast	County: Flagler	State: FL	Zip: 32164
E-mail Address: ☐ No			
Mailing Address: ☑ Same as Above			
City:		State:	Zip:

The attached schedules (1 through 7) must be completed for an initial or change of ownership application. All required documents must be prepared in accordance with generally accepted accounting principles. A Certified Public Accountant must compile, examine, or apply agreed-upon procedures to prospective financial statements, including summaries of significant assumptions and accounting policies. A financial forecast consists of prospective financial statements that present, to the best of the applicant's knowledge and belief, an entity's expected financial position, results of operations, and cash flows.

Name of Certified Public Accountant:			
Company Name (if applicable): REG & Advisors, CPA, PA		Telephone Number: 786-706-5900	
Street Address: 1395 Brickell Ave, Suite 800		Fax Number: 786-706-5901	
City: Miami	County: Dade	State: FL	Zip: 33131
E-mail Address: ☐ No ronnie@regadvisorscpa.com			
Mailing Address: ☑ Same as Above			
City:		State:	Zip:



Signer ID: YJVZW7GE18

AC55135

Signature of Certified Public Accountant and License #

08/23/2026

Date

SCHEDULE 1: ESTIMATED PROVIDER COSTS AND SOURCE OF FUNDS

	Pre-Opening Costs (total funds needed)		
1	Advertising	$	-
2	Equipment Purchases	$	500.00
3	Legal Costs/Consulting	$	1,800.00
4	Beginning Inventory	$	500.00
5	Insurance	$	-
6	License Fee	$	1,705.00
7	Accreditation Survey and/or Medicare & Medicaid Certification	$	-
	Deposits		
8	Building	$	-
9	Utility	$	-
10	Other	$	-
	Staffing		
11	Recruitment	$	-
12	Training	$	-
13	Other	$	-
14	**Total Pre-Opening Costs (Sum of Lines 1-13)**	**$**	**4,505.00**
15	Purchase Price (Change of Ownership Only)	$	-
16	Working Capital (Includes Pre-Opening Cost, See Checklist Below)	**$**	**59,388.13**
17	Contingency Funding (See Checklist Below)	**$**	**20,884.59**
18	**Total Working Capital, Contingency Funding, and Purchase Price**	**$**	**80,272.72**

Source of Funds (Please Attach Documentation Supporting the Source of Funding Listed Below: REQUIRED)

19	Cash on Hand	$	80,272.72
20	Non-related Financing	$	-
21	Owners/Investors	$	-
22	Parent or Affiliated Entities	$	-
23	Other (describe):	$	-
24	**Total Source of Funds**	**$**	**80,272.72**

Applicant Checklist

✓ **Working Capital** - is the amount needed to pay operating cost until a positive cash flow is reached. Working Capital should equal the largest cumulative cash need from Schedule 7 Line 21. Since Schedule 7 includes pre-opening cost, the largest cumulative cash need from Schedule 7 Line 21 will also include pre-opening cost.

✓ **Contingency Funding** - should equal one month's average operating expense from year one and represents funding available for extraordinary occurrences that are not anticipated in the financial projections. Contingency Funding should equal Year One Schedule 6 Line 35 divided by 12.

✓ **Proof of Funding** - Has the applicant provided proof of funding as described in the instructions?
If so, does the proof of funding equal or exceed the value on Line 18?
For **Health Care Clinics, Home Health, and Home Medical Equipment Agencies**: Total proof of funding can not be less than three(3) times the amount on line 17 per 408.8065(1)(c), Florida Statutes

SCHEDULE 2: STAFFING REQUIREMENTS

		YEAR ONE			YEAR TWO		
	Note: 1.0 FTE = 40 hour week	FTE's	AVERAGE ANNUAL SALARY per FTE	TOTAL ANNUAL COST	FTE's	AVERAGE ANNUAL SALARY per FTE	TOTAL ANNUAL COST
	ADMINISTRATION	Col. 1	Col. 2	Col.1 x Col.2	Col. 1	Col. 2	Col.1 x Col.2
1	Administrator/General Manager	0.80	$ 31,200.00	$ 24,960.00	0.80	$ 31,200.00	$ 24,960.00
2	Alternate Administrator	0.20	$ 31,200.00	$ 6,240.00	0.20	$ 31,200.00	$ 6,240.00
3	Director of Nursing/Medical Director	0.00	$ -	$ -	0.00	$ -	$ -
4	Alternate Director of Nursing	0.00	$ -	$ -	0.00	$ -	$ -
5	Financial Officer	0.20	$ 31,200.00	$ 6,240.00	0.20	$ 31,200.00	$ 6,240.00
6	Admissions Director	0.00	$ -	$ -	0.00	$ -	$ -
7	Bookkeeper	0.00	$ -	$ -	0.00	$ -	$ -
8	Secretary	0.00	$ -	$ -	0.00	$ -	$ -
9	Personnel/Complaint Records	0.00	$ -	$ -	0.00	$ -	$ -
10	Medical Records Clerk	0.00	$ -	$ -	0.00	$ -	$ -
11	Other:	0.00	$ -	$ -	0.00	$ -	$ -
12	**TOTAL ADMINISTRATION**	**1.20**		**$ 37,440.00**	**1.20**		**$ 37,440.00**
	GENERAL PERSONNEL (DIRECT EMPLOYEES ONLY)						
13	Delivery	0	$ -	$ -	0	$ -	$ -
14	Intake	0	$ -	$ -	0	$ -	$ -
15	Maintenance/Repair	0	$ -	$ -	0	$ -	$ -
16	Inventory	0	$ -	$ -	0	$ -	$ -
17	Other:	0	$ -	$ -	0	$ -	$ -
18	**TOTAL GENERAL**	**0**		**$ -**	**0**		**$ -**
	HEALTH CARE PROFESSIONALS (DIRECT EMPLOYEES ONLY) - Nurse Registries Complete Schedule 2.1						
19	R.N.s	0.00	$ -	$ -	0.00	$ -	$ -
20	L.P.N.s	0.00	$ -	$ -	0.00	$ -	$ -
21	Home Health Aides	0.00	$ -	$ -	0.00	$ -	$ -
22	Physical Therapy	0.00	$ -	$ -	0.00	$ -	$ -
23	Occupational Therapy	0.00	$ -	$ -	0.00	$ -	$ -
24	Speech Therapy	0.00	$ -	$ -	0.00	$ -	$ -
25	Respiratory Therapy	0.00	$ -	$ -	0.00	$ -	$ -
26	Social Services	0.00	$ -	$ -	0.00	$ -	$ -
27	Homemaker Services	0.00	$ -	$ -	0.00	$ -	$ -
28	Dietary Guidance	0.00	$ -	$ -	0.00	$ -	$ -
29	Home Health Aides	0.00	$ -	$ -	0.00	$ -	$ -
30	Other: Caregivers	3.00	$ 31,200.00	$ 93,600.00	5.00	$ 31,200.00	$ 156,000.00
31	**TOTAL HEALTH CARE**	**3.00**		**$ 93,600.00**	**5.00**		**$ 156,000.00**
	GRAND TOTAL	**4.20**		**$ 131,040.00**	**6.20**		**$ 193,440.00**

Applicant Checklist

✓ **Required Staffing** - has the applicant included salaries and FTEs to meet the minimum administrative staffing required under AHCA licensing rules and statutes?

✓ **Comparison to Hours Billed** - Has the applicant allocated enough salaries and FTEs on Schedule 2 including contracted personnel on Schedule 2.1 to provide services to the number of patients on Schedule 3?

SCHEDULE 2.1: CONTRACT SERVICES

		YEAR ONE			YEAR TWO		
		Hours	Cost Per Hour	Total Cost	Hours	Cost Per Hour	Total Cost
	GENERAL PERSONNEL	Col. 1	Col. 2	Col.1 x Col.2	Col. 1	Col. 2	Col.1 x Col.2
1	Delivery	0	$ -	$ -	0	$ -	$ -
2	Intake	0	$ -	$ -	0	$ -	$ -
3	Maintenance/Repair	0	$ -	$ -	0	$ -	$ -
4	Inventory	0	$ -	$ -	0	$ -	$ -
5	Other:		$ -	$ -	0	$ -	$ -
6	**TOTAL**	**0**		**$ -**	0		**$ -**
	HEALTH CARE PROFESSIONALS						
7	R.N.s		$ -	$ -		$ -	$ -
8	L.P.N.s	260	$ 25.00	$ 6,500.00	260	$ 25.00	$ 6,500.00
9	Home Health Aides		$ -	$ -		$ -	$ -
10	Physical Therapy		$ -	$ -		$ -	$ -
11	Occupational Therapy		$ -	$ -		$ -	$ -
12	Speech Therapy		$ -	$ -		$ -	$ -
13	Respiratory Therapy		$ -	$ -		$ -	$ -
14	Social Services		$ -	$ -		$ -	$ -
15	Homemaker Services		$ -	$ -		$ -	$ -
16	Dietary Guidance		$ -	$ -		$ -	$ -
17	Home Health Aides		$ -	$ -		$ -	$ -
18	Other:		$ -	$ -		$ -	$ -
19	Other:		$ -	$ -		$ -	$ -
20	Other:		$ -	$ -		$ -	$ -
21	Other:		$ -	$ -		$ -	$ -
22	Other:		$ -	$ -		$ -	$ -
23	**TOTAL**	**260**		**$ 6,500.00**	**260**		**$ 6,500.00**

Applicant Checklist

✓ **Comparison to Hours Billed** - Has the applicant allocated enough salaries and FTEs on Schedule 2 including contracted personnel on Schedule 2.1 to provide services to the number of patients on Schedule 3?

___ **Nurse Registry** - If the applicant is applying for a nurse registry license, Schedule 2.1 must be completed. If the applicant is applying for a license other than nurse registry this schedule should only be completed to reflect the appropriate number of non-direct employee hours anticipated by the applicant, if any.

SCHEDULE 3: HOURS, VISITS, AND CHARGES

Part A: For Home Health, Nurse Registry, Skilled Nursing, ALF, ICFDD, PPEC. and ADCC Only

	FIRST YEAR			SECOND YEAR		
	Total Number of Hours/Days	Average Charge Per Hour/Day	Total Gross Revenue	Total Number of Hours/Days	Average Charge Per Hour/Day	Total Gross Revenue
	Col. 1	Col. 2	Col. 1 x Col. 2	Col. 1	Col. 2	Col. 1 x Col. 2
Room & Board	0	$ -	$ -	0	$ -	$ -
Skilled Nursing	0	$ -	$ -	0	$ -	$ -
Ancillary						
Physical Therapy	0	$ -	$ -	0	$ -	$ -
Occupational Therapy	0	$ -	$ -	0	$ -	$ -
Speech Therapy	0	$ -	$ -	0	$ -	$ -
Medical Social Services	0	$ -	$ -	0	$ -	$ -
Respiratory Therapy	0	$ -	$ -	0	$ -	$ -
IV Therapy	0	$ -	$ -	0	$ -	$ -
Home Health Aides or CNA	0	$ -	$ -	0	$ -	$ -
Homemaker/Companion	0	$ -	$ -	0	$ -	$ -
Nutritional Guidance	0	$ -	$ -	0	$ -	$ -
Home Health Aides or CNA	0	$ -	$ -	0	$ -	$ -
PPEC & ADCC						
Daily Patient	3,380	$ 65.00	$ 219,700.00	6760	$ 65.00	$ 439,400.00
Hourly Patient	0	$ -	$ -	0	$ -	$ -
TOTAL	**3,380**		**$ 219,700.00**	**6,760**		**$ 439,400.00**

Part B: Health Care Clinics Applicants Only

List the Type of Visits	FIRST YEAR			SECOND YEAR		
	Total Number of Visits	Average Charge Per Visits	Total Gross Revenue	Total Number of Visits	Average Charge Per Visits	Total Gross Revenue
	Col. 1	Col. 2	Col. 1 x Col. 2	Col. 1	Col. 2	Col. 1 x Col. 2
	0	$ -	$ -	0	$ -	$ -
	0	$ -	$ -	0	$ -	$ -
	0	$ -	$ -	0	$ -	$ -
	0	$ -	$ -	0	$ -	$ -
	0	$ -	$ -	0	$ -	$ -
	0	$ -	$ -	0	$ -	$ -
	0	$ -	$ -	0	$ -	$ -
TOTAL	**0**		**$ -**	**0**		**$ -**

Part C:Hospices Only

	FIRST YEAR			SECOND YEAR		
	Total Number of Visits/Days	Average Charge Per Visit/Day	Total Gross Revenue	Total Number of Visits/Days	Average Charge Per Visit/Day	Total Gross Revenue
	Col. 1	Col. 2	Col. 1 x Col. 2	Col. 1	Col. 2	Col. 1 x Col. 2
Routine Home Care	0	$ -	$ -	0	$ -	$ -
Continuous Home Care	0	$ -	$ -	0	$ -	$ -
Inpatient Respite	0	$ -	$ -	0	$ -	$ -
General Inpatient	0	$ -	$ -	0	$ -	$ -
TOTAL	**0**		**$ -**	**0**		**$ -**

SCHEDULE 3HME: CHARGES (HME APPLICANTS ONLY)

List the Type of Equipment to be Sold	FIRST YEAR			SECOND YEAR		
	Total Number of Units	Average Charge Per Unit	Total Gross Revenue	Total Number of Units	Average Charge Per Unit	Total Gross Revenue
	Col. 1	Col. 2	Col. 1 x Col. 2	Col. 1	Col. 2	Col. 1 x Col. 2
Respiratory Modalities						
	0	$ -	$ -	0	$ -	$ -
	0	$ -	$ -	0	$ -	$ -
	0	$ -	$ -	0	$ -	$ -
	0	$ -	$ -	0	$ -	$ -
Ambulation Aids						
	0	$ -	$ -	0	$ -	$ -
	0	$ -	$ -	0	$ -	$ -
	0	$ -	$ -	0	$ -	$ -
	0	$ -	$ -	0	$ -	$ -
Mobility Aids						
	0	$ -	$ -	0	$ -	$ -
	0	$ -	$ -	0	$ -	$ -
	0	$ -	$ -	0	$ -	$ -
	0	$ -	$ -	0	$ -	$ -
Sickroom Setup						
	0	$ -	$ -	0	$ -	$ -
	0	$ -	$ -	0	$ -	$ -
	0	$ -	$ -	0	$ -	$ -
	0	$ -	$ -	0	$ -	$ -
Disposable Supplies						
	0	$ -	$ -	0	$ -	$ -
	0	$ -	$ -	0	$ -	$ -
	0	$ -	$ -	0	$ -	$ -
	0	$ -	$ -	0	$ -	$ -
TOTAL	**0**		**$ -**	**0**		**$ -**

List the Type of Equipment to be Rented	FIRST YEAR			SECOND YEAR		
	Total Number of Units	Average Charge Per Unit	Total Gross Revenue	Total Number of Units	Average Charge Per Unit	Total Gross Revenue
	Col. 1	Col. 2	Col. 1 x Col. 2	Col. 1	Col. 2	Col. 1 x Col. 2
Respiratory Modalities						
	0	$ -	$ -	0	$ -	$ -
	0	$ -	$ -	0	$ -	$ -
Ambulation Aids						
	0	$ -	$ -	0	$ -	$ -
	0	$ -	$ -	0	$ -	$ -
Mobility Aids						
	0	$ -	$ -	0	$ -	$ -
	0	$ -	$ -	0	$ -	$ -
Sickroom Setup						
	0	$ -	$ -	0	$ -	$ -
	0	$ -	$ -	0	$ -	$ -
Disposable Supplies						
	0	$ -	$ -	0	$ -	$ -
	0	$ -	$ -	0	$ -	$ -
TOTAL	**0**		**$ -**	**0**		**$ -**

SCHEDULE 4: PROJECTED OPERATING REVENUE YEAR 1

Page 1 of 2 pages

	GROSS REVENUES (from Schedule 3)	PRIVATE PAY Col. 1	MEDICARE Col. 2	MEDICAID Col. 3	INSURANCE Col. 4	HMO/PPO Col. 5	OTHER Col. 6	TOTAL Col. 7
1	Home Health, Nurse Registry, Skilled Nursing, ALF, ICFDD, PPEC. and ADCC	$ 32,955	$ -	$ 186,745	$ -	$ -	$ -	$ 219,700
2	Health Care Clinics	$ -	$ -	$ -	$ -	$ -	$ -	$ -
3	Home Medical Equipment	$ -	$ -	$ -	$ -	$ -	$ -	$ -
4	Hospice	$ -	$ -	$ -	$ -	$ -	$ -	$ -
5	**TOTAL GROSS REVENUES**	$ 32,955	$ -	$ 186,745	$ -	$ -	$ -	$ 219,700
	DEDUCTIONS FROM REVENUE							
6	Contractual Adjustments	$ -	$ -	$ -	$ -	$ -	$ -	$ -
7	Charity Care	$ -	$ -	$ -	$ -	$ -	$ -	$ -
8	Cost of Goods Sold	$ -	$ -	$ -	$ -	$ -	$ -	$ -
9	Other	$ -	$ -	$ -	$ -	$ -	$ -	$ -
10	**TOTAL DEDUCTIONS FROM REVENUE**	$ -	$ -	$ -	$ -	$ -	$ -	$ -
11	**NET PATIENT SERVICE REVENUE**	$ 32,955	$ -	$ 186,745	$ -	$ -	$ -	$ 219,700
12	**OTHER OPERATING REVENUE**	$ -	$ -	$ -	$ -	$ -	$ -	$ -
13	**NET OPERATING REVENUE**	$ 32,955	$ -	$ 186,745	$ -	$ -	$ -	$ 219,700
14	Total Number of Patients/Residents	507	0	2873	0	0	0	3380
15	Total Hours/Visits/Days	10	0	55	0	0	0	65
16	Net Revenue Per Hour/Visit/Day	$ 3,380	$ -	$ 3,380	$ -	$ -	$ -	$ 3,380

If you are applying for Medicare and/or Medicaid certification enter the number of months you anticipate operating prior to receiving certification. **2 mos.**

Applicant Checklist

✓ Does Line 5, Total Patient Service Revenues, reconcile with Schedule 3 and 3HME?

✓ Is the Net Medicare and Medicaid Revenue per Hour/Visit/Day (Line 16, Column 2 and 3) consistent with current reimbursement rates?

___ Home Health Agencies that are applying for Medicaid and/or Medicare must complete Schedule 4.1.

SCHEDULE 4: PROJECTED OPERATING REVENUE YEAR 2

Page 2 of 2 pages

	GROSS REVENUES (from Schedule 3)	PRIVATE PAY Col. 1	MEDICARE Col. 2	MEDICAID Col. 3	INSURANCE Col. 4	HMO/PPO Col. 5	OTHER Col. 6	TOTAL Col. 7
1	Home Health, Nurse Registry, Skilled Nursing, ALF, ICFDD, PPEC. and ADCC	$ -	$ -	$ 439,400	$ -	$ -	$ -	$ 439,400
2	Health Care Clinics	$ -	$ -	$ -	$ -	$ -	$ -	$ -
3	Home Medical Equipment	$ -	$ -	$ -	$ -	$ -	$ -	$ -
4	Hospice	$ -	$ -	$ -	$ -	$ -	$ -	$ -
5	**TOTAL GROSS REVENUES**	$ -	$ -	$ 439,400	$ -	$ -	$ -	$ 439,400
	DEDUCTIONS FROM REVENUE							
6	Contractual Adjustments	$ -	$ -	$ -	$ -	$ -	$ -	$ -
7	Charity Care	$ -	$ -	$ -	$ -	$ -	$ -	$ -
8	Cost of Goods Sold	$ -	$ -	$ -	$ -	$ -	$ -	$ -
9	Other	$ -	$ -	$ -	$ -	$ -	$ -	$ -
10	**TOTAL DEDUCTIONS FROM REVENUE**	$ -	$ -	$ -	$ -	$ -	$ -	$ -
11	**NET PATIENT SERVICE REVENUE**	$ -	$ -	$ 439,400	$ -	$ -	$ -	$ 439,400
12	**OTHER OPERATING REVENUE**	$ -	$ -	$ -	$ -	$ -	$ -	$ -
13	**NET OPERATING REVENUE**	$ -	$ -	$ 439,400	$ -	$ -	$ -	$ 439,400
14	Total Number of Patients/Residents	0	0	6760	0	0	0	6760
15	Total Hours/Visits/Days	0	0	65	0	0	0	65
16	Net Revenue Per Hour/Visit/Day	$ -	$ -	$ 6,760	$ -	$ -	$ -	$ 6,760

Applicant Checklist

- ✓ Does Line 5, Total Patient Service Revenues reconcile with Schedule 3?
- ✓ Is the Net Medicare and Medicaid Revenue per Hour/Visit/Day (Line 16, Column 2 and 3) consistent with current reimbursement rates?

SCHEDULE 4.1: HOME HEALTH AGENCY PROJECTED OPERATING REVENUE YEAR 1

This Schedule is only to be completed by Home Health Agencies who will apply for Medicaid and Medicare certification.

Note: Medicare and Medicaid will not reimburse HHA for treatment of Medicaid and Medicare patients prior to certification, this process takes between four and six months and is not guaranteed. This Schedule is designed to show Medicare and Medicaid revenues by month and the reduction to revenues over the certification period. The adjusted net revenue from this schedule will be used on Schedule 6 year one.

Note: In order for an initial applicant to become Medicare and Medicaid certified, the applicant will have to seek accreditation with deemed status from one of three national accreditation organizations. Please provide a written estimate for the cost of accreditation with deemed status from one of the three national accreditation organizations (Community Health Accreditation Organization, The Joint Commission, and Accreditation Commission for Health Care). Also, please include and clearly identify the cost of the accreditation on Schedule 1.

		1	2	3	4	5	6	7	8	9	10	11	12	Total
Medicare														
1	New Episodes													$ -
2	Net Revenue (Sch 4, Col 2, Line 11)	$ -	$ -	$ -	$ -	$ -	$ -	$ -	$ -	$ -	$ -	$ -	$ -	$ -
3	Certification Period Reduction	$ -	$ -	$ -	$ -	$ -	$ -							$ -
4	Adjusted Net Revenue (Line 2 - Line 3)	$ -	$ -	$ -	$ -	$ -	$ -	$ -	$ -	$ -	$ -	$ -	$ -	$ -
Medicaid														
5	Number of Patients	0	0	0	0	0	0	0	0	0	0	0	0	$ -
6	Net Revenue (Sch 4, Col 3, Line 11)	$ -	$ -	$ -	$ -	$ -	$ -	$ -	$ -	$ -	$ -	$ -	$ -	$ -
7	Certification Period Reduction	$ -	$ -	$ -	$ -	$ -	$ -	$ -	$ -	$ -	$ -	$ -	$ -	$ -
8	Adjusted Net Revenue (Line 6 - Line 7)	$ -	$ -	$ -	$ -	$ -	$ -	$ -	$ -	$ -	$ -	$ -	$ -	$ -
All Other Payers														
17	Number of Patients	0	0	0	0	0	0	0	0	0	0	0	0	$ -
10	Net Rev. (Sch 4, Line 11, Col 1, 4, 5, & 6)	$ -	$ -	$ -	$ -	$ -	$ -	$ -	$ -	$ -	$ -	$ -	$ -	$ -
Total Adjusted Net Revenue (Line 4+8+10)		$ -	$ -	$ -	$ -	$ -	$ -	$ -	$ -	$ -	$ -	$ -	$ -	$ -

SCHEDULE 5: BALANCE SHEET

	END OF YEAR ONE		END OF YEAR TWO	
ASSETS				
Current Assets				
Cash		$ 47,519		$ 127,972
Inventory		500		500
Accounts Receivable		1,014		1,099
Notes Receivable				
Other: Prepaid Expense		853		-
		-		
Total Current Assets		**49,886**		**129,571**
Fixed and Other Assets				
Net Land and Buildings				
Equipment	$ 500		$ 500	
Less Acc. Depreciation	100		200	
Net Equipment		400		300
Other:	$ -		$ -	
Total Fixed and Other Assets		**400**		**300**
Total Assets		**$ 50,286**		**$ 129,871**
LIABILITIES AND NET ASSETS				
Current Liabilities				
Accounts Payable		$ 928		$ 928
Notes Payable				
Current Maturities of L.T. Debt				
Other:		-		-
Total Current Liabilities		**928**		**928**
Long-Term and Other Liabilities				
Mortgage Payable		-		-
Payable to Affiliates				
Other:				
Total Long-Term and Other Liabilities		**928**		**928**
Net Assets				
Common Stock		1,000		1,000
Additional Paid In Capital		79,273		79,273
Net Assets		-		-
Retained Earnings		(30,915)		48,670
Other:				
Total Net Assets		**49,358**		**128,943**
Total Liabilities and Net Assets		**$ 50,286**		**$ 129,871**
		-		0

Applicant Checklist

- ✓ Does the Cash, Inventory, Accounts Receivable, and Accounts Payable Balance reconcile with the Cash Flow Statement (Sch. 7)?
- ✓ Does Depreciation and Retained Earnings reconcile with the income statement?
- ✓ Did the applicant attach notes with the assumptions used for collecting receivables and paying payables?

SCHEDULE 6 - PROJECTED SUMMARY OF REVENUES AND EXPENSES

YEAR 1

		Month	1	2	3	4	5	6	7	8	9	10	11	12	TOTALS
NET OPERATING REVENUE															
1	Net Revenue From Sch 4 and Sch 4.1		2,817	5,633	8,450	11,267	14,083	16,900	19,717	22,533	25,350	28,167	30,983	33,800	219,700
EXPENSES:															
	ADMINISTRATION & OVERHEAD														
2		Salaries and Wages (Sch 2, Row 12)	3,120	3,120	3,120	3,120	3,120	3,120	3,120	3,120	3,120	3,120	3,120	3,120	37,440
3		Benefits	62	62	62	62	62	62	62	62	62	62	62	62	749
4		Rent	500	500	500	500	500	500	500	500	500	500	500	500	6,000
5		Utilities and Maintenance	50	50	50	50	50	50	50	50	50	50	50	50	600
6		License	71	71	71	71	71	71	71	71	71	71	71	71	853
7		Federal, State, & Local Taxes	858	858	858	858	858	858	858	858	858	858	858	858	10,302
8		Insurance, Liability & Other	2,867	2,867	2,867	2,867	2,867	2,867	2,867	2,867	2,867	2,867	2,867	2,867	34,400
9		Education and Training	-	-	-	-	-	-	-	-	-	-	-	-	-
10		Professional Fees	2,100	300	300	300	300	300	300	300	300	300	300	300	5,400
11		Interest	-	-	-	-	-	-	-	-	-	-	-	-	-
12		Repair & Maintenance	500	500	500	500	500	500	500	500	500	500	500	500	6,000
13		Bad Debts	-	-	-	-	-	-	-	-	-	-	-	-	-
14		Depreciation & Amortization	8	8	8	8	8	8	8	8	8	8	8	8	100
15		Other	-	-	-	-	-	-	-	-	-	-	-	-	-
16		Other	-	-	-	-	-	-	-	-	-	-	-	-	-
17	**TOTAL ADMIN. AND OVERHEAD**		$ 10,137	$ 8,337	$ 8,337	$ 8,337	$ 8,337	$ 8,337	$ 8,337	$ 8,337	$ 8,337	$ 8,337	$ 8,337	$ 8,337	$ 101,843
	SALARIES & WAGES (Sch 2 & 2.1)														
18		General Personnel (Sch 2, Row 18)	-	-	-	-	-	-	-	-	-	-	-	-	-
19		Health Care (Sch 2, Row 31)	7,800	7,800	7,800	7,800	7,800	7,800	7,800	7,800	7,800	7,800	7,800	7,800	93,600
20		Benefits	156	156	156	156	156	156	156	156	156	156	156	156	1,872
21		Mileage	-	-	-	-	-	-	-	-	-	-	-	-	-
22		Contract Gen. Per. (Sch 2.1, Row 6)	-	-	-	-	-	-	-	-	-	-	-	-	-
23		Cont. Health Care (Sch 2.1, Row 23)	542	542	542	542	542	542	542	542	542	542	542	542	6,500
24		Other	-	-	-	-	-	-	-	-	-	-	-	-	-
25	**TOTAL SALARIES & WAGES**		$ 8,498	$ 8,498	$ 8,498	$ 8,498	$ 8,498	$ 8,498	$ 8,498	$ 8,498	$ 8,498	$ 8,498	$ 8,498	$ 8,498	$ 101,972
	OTHER OPERATING EXPENSES														
26		Housekeeping	-	-	-	-	-	-	-	-	-	-	-	-	-
27		Laundry	-	-	-	-	-	-	-	-	-	-	-	-	-
28		Dietary	600	1,200	1,800	2,400	3,000	3,600	4,200	4,800	5,400	6,000	6,600	7,200	46,800
29		Other Ancillary	-	-	-	-	-	-	-	-	-	-	-	-	-
30		Medical Supplies	-	-	-	-	-	-	-	-	-	-	-	-	-
31		Other	-	-	-	-	-	-	-	-	-	-	-	-	-
32		Other	-	-	-	-	-	-	-	-	-	-	-	-	-
33		Other	-	-	-	-	-	-	-	-	-	-	-	-	-
34	**TOTAL OTHER OPERATING**		$ 600	$ 1,200	$ 1,800	$ 2,400	$ 3,000	$ 3,600	$ 4,200	$ 4,800	$ 5,400	$ 6,000	$ 6,600	$ 7,200	$ 46,800
35	**TOTAL OPERATING COSTS**		$ 19,235	$ 18,035	$ 18,635	$ 19,235	$ 19,835	$ 20,435	$ 21,035	$ 21,635	$ 22,235	$ 22,835	$ 23,435	$ 24,035	$ 250,615
36	**NET OPERATING INCOME (LOSS)**		$ (16,418)	$ (12,401)	$ (10,185)	$ (7,968)	$ (5,751)	$ (3,535)	$ (1,318)	$ 899	$ 3,115	$ 5,332	$ 7,549	$ 9,765	$ (30,915)
37	**OPERATING MARGIN%**		-582.88%	-220.14%	-120.53%	-70.72%	-40.84%	-20.91%	-6.68%	3.99%	12.29%	18.93%	24.36%	28.89%	-14.07%
38	**NON OPERATING REVENUES (NET)**		-	-	-	-	-	-	-	-	-	-	-	-	-
39	**INCOME OR (LOSS)**		$ (16,418)	$ (12,401)	$ (10,185)	$ (7,968)	$ (5,751)	$ (3,535)	$ (1,318)	$ 899	$ 3,115	$ 5,332	$ 7,549	$ 9,765	$ (30,915)

SCHEDULE 6 - PROJECTED SUMMARY OF REVENUES AND EXPENSES

YEAR 2

		Month	1	2	3	4	5	6	7	8	9	10	11	12	TOTALS
NET OPERATING REVENUE															
1		Net Revenue From Sch 4	36,617	36,617	36,617	36,617	36,617	36,617	36,617	36,617	36,617	36,617	36,617	36,617	439,400
EXPENSES:															
		ADMINISTRATION & OVERHEAD													
2		Salaries and Wages (Sch 2, Row 12)	3,120	3,120	3,120	3,120	3,120	3,120	3,120	3,120	3,120	3,120	3,120	3,120	37,440
3		Benefits	62	62	62	62	62	62	62	62	62	62	62	62	749
4		Rent	500	500	500	500	500	500	500	500	500	500	500	500	6,000
5		Utilities and Maintenance	50	50	50	50	50	50	50	50	50	50	50	50	600
6		License	71	71	71	71	71	71	71	71	71	71	71	71	853
7		Federal, State, & Local Taxes	858	858	858	858	858	858	858	858	858	858	858	858	10,302
8		Insurance, Liability & Other	2,867	2,867	2,867	2,867	2,867	2,867	2,867	2,867	2,867	2,867	2,867	2,867	34,400
9		Education and Training	-	-	-	-	-	-	-	-	-	-	-	-	-
10		Professional Fees	2,100	300	300	300	300	300	300	300	300	300	300	300	5,400
11		Interest	-	-	-	-	-	-	-	-	-	-	-	-	-
12		Repair & Maintenance	500	500	500	500	500	500	500	500	500	500	500	500	6,000
13		Bad Debts	-	-	-	-	-	-	-	-	-	-	-	-	-
14		Depreciation & Amortization	8	8	8	8	8	8	8	8	8	8	8	8	100
15		Other	-	-	-	-	-	-	-	-	-	-	-	-	-
16		Other	-	-	-	-	-	-	-	-	-	-	-	-	-
17		**TOTAL ADMIN. AND OVERHEAD**	$ 10,137	$ 8,337	$ 8,337	$ 8,337	$ 8,337	$ 8,337	$ 8,337	$ 8,337	$ 8,337	$ 8,337	$ 8,337	$ 8,337	$ 101,843
		SALARIES & WAGES (Sch 2 & 2.1)													
18		General Personnel (Sch 2, Row 18)	-	-	-	-	-	-	-	-	-	-	-	-	-
19		Health Care (Sch 2, Row 31)	13,000	13,000	13,000	13,000	13,000	13,000	13,000	13,000	13,000	13,000	13,000	13,000	156,000
20		Benefits	156	156	156	156	156	156	156	156	156	156	156	156	1,872
21		Mileage													-
22		Contract Gen. Per. (Sch 2.1, Row 6)	-	-	-	-	-	-	-	-	-	-	-	-	-
23		Cont. Health Care (Sch 2.1, Row 23)	542	542	542	542	542	542	542	542	542	542	542	542	6,500
24		Other	-	-	-	-	-	-	-	-	-	-	-	-	-
25		**TOTAL SALARIES & WAGES**	$ 13,698	$ 13,698	$ 13,698	$ 13,698	$ 13,698	$ 13,698	$ 13,698	$ 13,698	$ 13,698	$ 13,698	$ 13,698	$ 13,698	$ 164,372
		OTHER OPERATING EXPENSES													
26		Housekeeping	-	-	-	-	-	-	-	-	-	-	-	-	-
27		Laundry	-	-	-	-	-	-	-	-	-	-	-	-	-
28		Dietary	-	-	-	-	-	-	-	-	-	-	-	-	-
29		Other Ancillary	-	-	-	-	-	-	-	-	-	-	-	-	-
30		Medical Supplies	7,800	7,800	7,800	7,800	7,800	7,800	7,800	7,800	7,800	7,800	7,800	7,800	93,600
31		Other	-	-	-	-	-	-	-	-	-	-	-	-	-
32		Other	-	-	-	-	-	-	-	-	-	-	-	-	-
33		Other	-	-	-	-	-	-	-	-	-	-	-	-	-
34		**TOTAL OTHER OPERATING**	$ 7,800	$ 7,800	$ 7,800	$ 7,800	$ 7,800	$ 7,800	$ 7,800	$ 7,800	$ 7,800	$ 7,800	$ 7,800	$ 7,800	$ 93,600
35		**TOTAL OPERATING COSTS**	$ 31,635	$ 29,835	$ 29,835	$ 29,835	$ 29,835	$ 29,835	$ 29,835	$ 29,835	$ 29,835	$ 29,835	$ 29,835	$ 29,835	$ 359,815
36		**NET OPERATING INCOME (LOSS)**	$ 4,982	$ 6,782	$ 6,782	$ 6,782	$ 6,782	$ 6,782	$ 6,782	$ 6,782	$ 6,782	$ 6,782	$ 6,782	$ 6,782	$ 79,585
37		**OPERATING MARGIN%**	13.61%	18.52%	18.52%	18.52%	18.52%	18.52%	18.52%	18.52%	18.52%	18.52%	18.52%	18.52%	18.11%
38		**NON OPERATING REVENUES (NET)**	-	-	-	-	-	-	-	-	-	-	-	-	-
39		**INCOME OR (LOSS)**	$ 4,982	$ 6,782	$ 6,782	$ 6,782	$ 6,782	$ 6,782	$ 6,782	$ 6,782	$ 6,782	$ 6,782	$ 6,782	$ 6,782	$ 79,585

Schedule 7 PROJECTED CASH FLOW STATEMENT for year one ending

	Month	1	2	3	4	5	6	7	8	9	10	11	12	TOTALS
1	**Net Operating Income (Sch. 6, Line 39)**	$ (16,417.92)	$ (12,401.26)	$ (10,184.59)	$ (7,967.92)	$ (5,751.26)	$ (3,534.59)	$ (1,317.92)	$ 898.74	$ 3,115.41	$ 5,332.08	$ 7,548.75	$ 9,765.41	$ (30,915.06)
	ADD: items that decrease income but do not decrease cash:													
2	Depreciation/Amortization	8	8	8	8	8	8	8	8	8	8	8	8	100
3	Increase in Accounts Payable	928	928	928	928	928	928	928	928	928	928	928	928	11,138
4	Decrease in Accounts Receivable	-	-	7,183	254	338	423	507	592	676	761	845	930	12,506
5	Other: Prepaid Expenses	71	71	71	71	71	71	71	71	71	71	71	71	853
6	Other: Expenses included line 14	1,800												1,800
7	**TOTAL ADDITIONS (lines 2-6)**	$ 2,807.58	$ 1,007.58	$ 8,190.08	$ 1,261.08	$ 1,345.58	$ 1,430.08	$ 1,514.58	$ 1,599.08	$ 1,683.58	$ 1,768.08	$ 1,852.58	$ 1,937.08	$ 26,396.90
	DEDUCT: items that increase income but do not increase cash:													
8	Increase in Accounts Receivable	2,394	4,788	254	338	423	507	592	676	761	845	930	1,014	13,520
9	Decrease in Accounts Payable	-	928	928	928	928	928	928	928	928	928	928	928	10,210
10	Other _____	-	-	-	-	-	-	-	-	-	-	-	-	-
11	Other _____	-	-	-	-	-	-	-	-	-	-	-	-	-
12	**TOTAL DEDUCTIONS (lines 8-11)**	$ 2,394.17	$ 5,716.53	$ 1,181.70	$ 1,266.20	$ 1,350.70	$ 1,435.20	$ 1,519.70	$ 1,604.20	$ 1,688.70	$ 1,773.20	$ 1,857.70	$ 1,942.20	$ 23,730.20
13	**Cash Flows from Operations (lines 1 plus 7 less 12)**	$ (16,004.51)	$ (17,110.21)	$ (3,176.21)	$ (7,973.05)	$ (5,756.38)	$ (3,539.71)	$ (1,323.05)	$ 893.62	$ 3,110.29	$ 5,326.95	$ 7,543.62	$ 9,760.29	$ (28,248.36)
	Other Uses of Cash													
14	Pre-Opening Cost (Sch1 line 14)	$ 4,505.00												4,505
15	Purchase of Equipment	-												-
16	Change in Inventory	-												-
17	Repayment of Principle on Loan	-	-	-										-
18	Other Non-Operating Uses	-												-
19	**Total Other Uses of Cash (14-18)**	$ 4,505.00	$ -	$ -	$ -	$ -	$ -	$ -	$ -	$ -	$ -	$ -	$ -	$ 4,505.00
20	**Total Cash Needs (19 minus 13)**	$ 20,509.51	$ 17,110.21	$ 3,176.21	$ 7,973.05	$ 5,756.38	$ 3,539.71	$ 1,323.05	$ (893.62)	$ (3,110.29)	$ (5,326.95)	$ (7,543.62)	$ (9,760.29)	$ 32,753.36
21	**Cumulative Cash Needs (Line 20 this month plus line 21 last month)**	$ 20,509.51	$ 37,619.73	$ 40,795.94	$ 48,768.99	$ 54,525.37	$ 58,065.08	$ 59,388.13	$ 58,494.51	$ 55,384.22	$ 50,057.27	$ 42,513.65	$ 32,753.36	
22	**Beginning Cash on Hand (ending cash last month line 28)**	$ 80,272.72	$ 59,763.20	$ 42,652.99	$ 39,476.78	$ 31,503.73	$ 25,747.35	$ 22,207.64	$ 20,884.59	$ 21,778.21	$ 24,888.50	$ 30,215.45	$ 37,759.07	$ 80,272.72
	OTHER SOURCES OF CASH													
23	Cash from Non-Related Loans	$ -												-
24	Cash from Owners/Investors													-
25	From Parent or Affiliated Entities													-
26	Other non-operating sources													-
27	**Total Other Sources of Cash (23-26)**	$ -	$ -	$ -	$ -	$ -	$ -	$ -	$ -	$ -	$ -	$ -	$ -	$ -
28	**CASH AVAILABLE AT END OF MONTH (line 27 plus 22 minus 20)**	$ 59,763.20	$ 42,652.99	$ 39,476.78	$ 31,503.73	$ 25,747.35	$ 22,207.64	$ 20,884.59	$ 21,778.21	$ 24,888.50	$ 30,215.45	$ 37,759.07	$ 47,519.36	$ 47,519.36

Schedule 7 PROJECTED CASH FLOW STATEMENT for year two ending

	Month	1	2	3	4	5	6	7	8	9	10	11	12	TOTALS
1	**Net Operating Income (Sch. 6, Line 39)**	$ 4,982.08	$ 6,782.08	$ 6,782.08	$ 6,782.08	$ 6,782.08	$ 6,782.08	$ 6,782.08	$ 6,782.08	$ 6,782.08	$ 6,782.08	$ 6,782.08	$ 6,782.08	$ 79,584.94
	ADD: items that decrease income but do not decrease cash:													
2	Depreciation/Amortization	8	8	8	8	8	8	8	8	8	8	8	8	100
3	Increase in Accounts Payable	928	928	928	928	928	928	928	928	928	928	928	928	11,138
4	Decrease in Accounts Receivable	1,014	1,099	1,099	1,099	1,099	1,099	1,099	1,099	1,099	1,099	1,099	1,099	13,098
5	Other Prepaid Expenses	71	71	71	71	71	71	71	71	71	71	71	71	853
6	Other _____													-
7	**TOTAL ADDITIONS (lines 2-6)**	$ 2,021.58	$ 2,106.08	$ 2,106.08	$ 2,106.08	$ 2,106.08	$ 2,106.08	$ 2,106.08	$ 2,106.08	$ 2,106.08	$ 2,106.08	$ 2,106.08	$ 2,106.08	$ 25,188.40
	DEDUCT: items that increase income but do not increase cash:													
8	Increase in Accounts Receivable	1,099	1,099	1,099	1,099	1,099	1,099	1,099	1,099	1,099	1,099	1,099	1,099	13,182
9	Decrease in Accounts Payable	928	928	928	928	928	928	928	928	928	928	928	928	11,138
10	Other _____	-	-	-	-	-	-	-	-	-	-	-	-	-
11	Other _____	-	-	-	-	-	-	-	-	-	-	-	-	-
12	**TOTAL DEDUCTIONS (lines 8-11)**	$ 2,026.70	$ 2,026.70	$ 2,026.70	$ 2,026.70	$ 2,026.70	$ 2,026.70	$ 2,026.70	$ 2,026.70	$ 2,026.70	$ 2,026.70	$ 2,026.70	$ 2,026.70	$ 24,320.40
13	**Cash Flows from Operations (lines 1 plus 7 less 12)**	$ 4,976.95	$ 6,861.45	$ 6,861.45	$ 6,861.45	$ 6,861.45	$ 6,861.45	$ 6,861.45	$ 6,861.45	$ 6,861.45	$ 6,861.45	$ 6,861.45	$ 6,861.45	$ 80,452.94
	Other Uses of Cash													
14	Pre-Opening Cost (Sch1 line 14)	-												-
15	Purchase of Equipment	-												-
16	Change in Inventory	-												-
17	Repayment of Principle on Loan													-
18	Other Non-Operating Uses	-												-
19	**Total Other Uses of Cash (14-18)**	$ -	$ -	$ -	$ -	$ -	$ -	$ -	$ -	$ -	$ -	$ -	$ -	$ -
20	**Total Cash Needs (19 minus 13)**	$ (4,976.95)	$ (6,861.45)	$ (6,861.45)	$ (6,861.45)	$ (6,861.45)	$ (6,861.45)	$ (6,861.45)	$ (6,861.45)	$ (6,861.45)	$ (6,861.45)	$ (6,861.45)	$ (6,861.45)	$ (80,452.94)
21	**Cumulative Cash Needs (Line 20 this month plus line 21 last month)**	$ 27,776.41	$ 20,914.95	$ 14,053.50	$ 7,192.05	$ 330.59	$ (6,530.86)	$ (13,392.31)	$ (20,253.77)	$ (27,115.22)	$ (33,976.67)	$ (40,838.13)	$ (47,699.58)	
22	**Beginning Cash on Hand (ending cash last month line 28)**	$ 47,519.36	$ 52,496.31	$ 59,357.76	$ 66,219.22	$ 73,080.67	$ 79,942.12	$ 86,803.58	$ 93,665.03	$ 100,526.48	$ 107,387.94	$ 114,249.39	$ 121,110.84	$ 47,519.36
	OTHER SOURCES OF CASH													
23	Cash from Non-Related Loans													-
24	Cash from Owners/Investors													-
25	From Parent or Affiliated Entities													-
26	Other non-operating sources													-
27	**Total Other Sources of Cash (23-26)**	$ -	$ -	$ -	$ -	$ -	$ -	$ -	$ -	$ -	$ -	$ -	$ -	$ -
28	**CASH AVAILABLE AT END OF MONTH (line 27 plus 22 minus 20)**	$ 52,496.31	$ 59,357.76	$ 66,219.22	$ 73,080.67	$ 79,942.12	$ 86,803.58	$ 93,665.03	$ 100,526.48	$ 107,387.94	$ 114,249.39	$ 121,110.84	$ 127,972.30	$ 127,972.30

THERAPEUTIC ASSISTED LIVING CORP.
SUMMARY OF SIGNIFICANT PROJECTION ASSUMPTIONS
August 2026 through 2028

NOTE 1 BUSINESS DESCRIPTION AND BASIS OF PRESENTATION

Business Description

Therapeutic Assisted Living Corp. (the "Home Health Business", the “Applicant”, or the “Company”, or the "Business"), a Florida Limited Liability Company, is acquiting an Adult Day Care.

Basis of Presentation

The financial projection (the “Projection”) presents, to the best of the knowledge and belief of management (“Management”) of the Applicant, the expected results of operations and cash flows for the initial application period and the years ending: **August 2026 through 2028** (the “Projection Period”).

The Projection has been prepared for purposes of obtaining licensure and is not intended to be a complete presentation of legal entity, its assets and liabilities, nor of its revenues and expenses.

The presentation using AHCA prescribed form # 3100-0009, July 2009 as designed and prescribed by AHCA to meet its needs, and there is a presumption that the required information is sufficient to provide information for the anticipated provider’s revenue and expenditures, the basis for financing anticipated cash-flow requirements of the provider, and an applicant’s access to contingency financing to be presented with AHCA. Accordingly, this projection may not be useful for other purposes.

A projection although similar to a forecast, is a presentation of prospective financial information that is subject to one or more hypothetical assumptions. Management has included several assumptions that are considered to be hypothetical assumptions.

Management’s hypothetical assumptions (the “Hypothetical Assumptions”) are as follows:

The Applicant is able to obtain all regulatory approvals; the Applicant is able to achieve the occupancy, payer mix, and average rates; the Applicant is able to maintain its projected operating structure and limit the additional expenses associated with operating the facility.

Accordingly, the Projection reflects Management’s judgement as of the date of the Projection, of the expected conditions and its expected course of action assuming the Hypothetical Assumptions. The assumptions disclosed herein, while not all-inclusive, are the assumptions which Management believes are significant to the Projection. The prospective results may not be achieved. Furthermore, even if the Hypothetical Assumptions were to occur, there will usually be differences between the projected and actual results, because events and circumstances frequently do not occur as expected, and those differences may be material.

NOTE 2 SUMMARY OF SIGNIFICANT ACCOUNTING POLICIES

Basis of Accounting

The Company maintains its accounting and financial records according to the accrual basis of accounting.

Use of Estimates

Estimates are used for, but not limited to, revenue, goodwill and asset impairments, self-insurance reserves, performance-based compensation, the allowance for credit losses, depreciation and amortization, leasing transactions, income taxes, and other contingencies. Although these estimates are based on management's best knowledge of current events and actions that the Company may undertake in the future, actual results may differ from the original estimates.

Cash and Cash Equivalents

The Company considers all short-term debt securities purchased with an original maturity of three months or less to be cash or cash equivalents.

Property, Plant and Equipment and Leasehold Intangibles, Net:

Property, plant and equipment and leasehold intangibles, net is recorded at cost. Depreciation and amortization are computed using the straight-line method over the estimated useful lives of the assets.

Expenditures for ordinary maintenance and repairs are expensed to operations as incurred. Renovations and improvements, which improve and/or extend the useful life of the asset, are capitalized, and depreciated over the estimated useful life of the renovations or improvements.

All tangible property with a useful life of more than one year and a unit acquisition cost of $2,500 or more will be capitalized and depreciated over its useful life using the straight-line method of depreciation. The company will expense the full acquisition cost of tangible property below these thresholds in the year of purchase.

Revenues Patient Fees:

Fees revenue is reported at the amount that reflects the consideration the Company expects to receive in exchange for the services provided. These amounts are due from patients or third-party payors and include variable consideration for retroactive adjustments from estimated reimbursements, if any, under reimbursement programs. Performance obligations are determined based on the nature of the services provided. Patients fee revenue is recognized as performance obligations are satisfied.

Gain (Loss) on Sale of Assets

The Company recognizes gain or loss from the sale of equity method investments when the transfer of control is complete, and the Company has no continuing involvement with the transferred financial assets.

Accounts Receivable:

Revenues are recorded at established rates in the period during which services are rendered. When there is a timing difference between revenues earned or incurred and collected, this timing difference is accounted for by recording receivables Accounts receivable are reported net of an allowance for credit losses to represent the Company's estimate of inherent losses at the balance sheet date.

Accounts Payable:

Expenses are recorded in the period in which is accrued and/or an invoice from the vendor is received. When there is a timing difference between expenses accrued or incurred and paid, this timing difference is accounted for by recording an Account Payable or a similar Payable Account.

Income Taxes:

Therapeutic Assisted Living Corp is a Florida Corporation, treated as an S-Corp for tax purposes. Under the provisions of the Internal Revenue Code and comparable state income tax law. As such, the Company is generally not subject to income taxes and the Company's net income, or loss is reported on the individual tax return of the members of the Company. Therefore, no provision or liability for income taxes is reflected in the financial statements.

Projected Pre-Opening Costs Assumptions:

The rented real estate property is in compliance with the codes and requirements of the county and the agency to operate as a Adult Day Care.

Fixtures, office/business equipment, furniture, appliances, inventory, merchandise, supplies, and any other asset of value that is intrinsic and extrinsic to said business will remain in the premises and used for business purposes.

NOTE 3 MANAGEMENT'S BASIS FOR PROJECTION OF REVENUES AND EXPENSES

Projected Charges Per Month Per Patient

Projected revenue consists of revenue from operating the Business. Future years were projected utilizing assumptions of average cost of care. The Facility will rely on Referral Agencies, Doctor's offices, Rehabilitation Centers, and Hospitals to acquire patients.

Employees

Personnel may allocate time to different roles and responsibilities. A full time equivalent employee ("FTE") is assumed to represent 2,080 hours of time paid annually. Employees will be hired using online recruiting services and/or agencies.

Rents and Leases:

The Company will lease the real estate from Flager County.

No Purchase Price: $0.00

The Adult Day Care is currently being operated by the Flager County and is will be transferred through a bidding process to the most competitive bidder.

THERAPEUTIC ASSISTED LIVING CORP.
AHCA PROOF OF FINANCIAL ABILITY TO OPERATE
Cash Needs & Source of Funds: Presentation of Proof of Fundings

The agency might require supporting documents, including but not limited to:

Proof of Funding Documents to Provide	**Amount (Min.)**
Minimum Cash Needs: Bank statements, letters of commitment, Invoices and Payment Confirmations, Other.	$ 80,273



County of Flagler

26-RFP-022

OPERATION AND PROGRAM ADMINISTRATION OF THE FLAGLER COUNTY ADULT DAY CARE AT THE DAVID I. SIEGEL CENTER

This Contract, entered into this September 14, 2026, by and between the Flagler County Board of County Commissioners, a political subdivision of the State of Florida, whose address is 1769 East Moody Blvd., Building 2, Bunnell, FL 32110, hereinafter called the **COUNTY**, and Therapeutic Assisted Living Corp, a Florida profit corporation whose address is 25 Lyndenhurst Lane, Palm Coast, FL 32137 hereinafter called the **CONTRACTOR**.

WITNESSETH: That the **COUNTY** agrees with the **CONTRACTOR**, as follows:

A. The Contract shall consist of the following, all of which are hereby made a part hereof:

    1. 26-RFP-022 Bid Documents
    2. **CONTRACTOR'S** 26-RFP-022 Bid Submission
    3. **CONTRACTOR'S** Insurance Certificate(s)

B. The **CONTRACTOR** agrees to furnish all labor, equipment, material and the skill necessary for the complete work as set forth in the component parts of the Contract described herein and to the satisfaction of the **COUNTY** or its duly authorized representative.

C. The **CONTRACTOR** agrees to commence the work to be done under this Contract, beginning after the award date.

D. The **COUNTY** agrees to pay the **CONTRACTOR** for the services rendered, in accordance with the pricing structure set forth in the Bid Submission.

[SIGNATURE PAGES TO FOLLOW]

IN WITNESS WHEREOF, the parties hereto have caused this instrument to be executed by their respective officials thereunto duly authorized, effective the day and year above written.

Attest:

Tom Bexley, Clerk of the Circuit Court and Comptroller

FLAGLER COUNTY BOARD OF COUNTY COMMISSIONERS

Leann Pennington, Chair

APPROVED-AS-TO-FORM

Sean S. Moylan Digitally signed by Sean S. Moylan Date: 2026.09.03 17:01:44 -04'00'

Sean S. Moylan, Deputy County Attorney

As authorized for execution by the Board of Flagler County Board of County Commissioners at its September 14, 2026, regular meeting.

[THIS SPACE INTENTIONALLY LEFT BLANK]

ATTEST:

_____
Signature

_____
Print Name, Title

Therapeutic Assisted Living Corp

_____
Signature

_____
Print Name, Title

_____
Date

County of Flagler

REQUEST FOR PROPOSAL

26-RFP-022

OPERATION AND PROGRAM ADMINISTRATION OF THE FLAGLER COUNTY ADULT DAY CARE AT THE DAVID I. SIEGEL CENTER

RELEASE DATE: August 3, 2026
RESPONSE DEADLINE: August 24, 2026, 2:00 pm
Please refer to the project timeline in this document for all important deadlines.

Table Of Contents

1. Introduction
2. General Terms and Conditions
3. Special Terms and Conditions
4. Insurance Requirements
5. Scope of Work
6. Proposal Submittal Requirements
7. Evaluation Phases
8. Vendor Questionnaire
9. Definitions
10. Attachments/Exhibits

Attachments:

A - PO Standard Terms and Conditions

1. Introduction

1.1. Summary

Flagler County is seeking competitive proposals from qualified, experienced, and licensed providers to assume full operational, programmatic, and financial responsibility for the County-owned Adult Day Care Center facility located in Flagler County, Florida. The David I. Siegel Center is located at 1000 Belle Terre Blvd., Palm Coast FL, operating as a state-licensed Adult Day Care facility for 20 years.

1.2. Contact Information

Jessica Martin
Senior Procurement Analyst
1769 E. Moody Blvd
Building 2
Bunnell, FL 32110
Email: jmartin@flaglercounty.gov
Phone: (386) 313-4063

Department:
Health & Human Services

Department Head:
Joe Hegedus
Director

1.3. Timeline

Release Project Date	August 3, 2026
Pre-Proposal Meeting (Mandatory)	August 12, 2026, 10:00am David I. Siegel Adult Day Care Center 1000 Belle Terre Blvd Palm Coast, FL 32164
Question Submission Deadline	August 14, 2026, 12:00pm

Proposal Submission Deadline and Bid Opening	August 24, 2026, 2:00pm 3rd Floor Financial Services Conference Room 1769 East Moody Blvd Bldg. 2 Bunnell, FL 32110 Microsoft Teams meeting Join on your computer, mobile app or room device https://www.microsoft.com/en-us/microsoft-teams/join-a-meeting Meeting ID: 295 599 647 592 082 Passcode: rC2yD2uD
Evaluation Committee Meeting (Non-Mandatory)	September 2, 2026, 2:00pm 3rd Floor Financial Services Conference Room 1769 East Moody Blvd Bldg. 2 Bunnell, FL 32110 Microsoft Teams meeting Join on your computer, mobile app or room device https://www.microsoft.com/en-us/microsoft-teams/join-a-meeting Meeting ID: 253 471 036 474 966 Passcode: rV2MY6uR

2. General Terms and Conditions

2.1. Submission of Offers

The Flagler County Board of County Commissioners ("Flagler County" or "County") are requesting proposals for the service and/or product(s) detailed within this solicitation. If your company is interested in submitting a proposal to provide this service and/or product(s), please provide the requested information in this solicitation, complete the included forms, and submit these documents with your response through OpenGov Procurement, at https://procurement.opengov.com/portal/flaglercounty by the date and time posted. The submission of responses prior to the specified date and time is solely and strictly the responsibility of the Proposer. Responses received after the posted date and time will not be considered. Additional information may be submitted with the response. No offer may be modified after acceptance. Terms and conditions differing from those in this solicitation may be cause for disqualification of the Response. Failure to provide the required information may result in the Response not being considered.

Do not submit confidential information, proprietary information and/or trade secrets.

2.2. Purchase Order/Master Agreement Terms and Conditions

The County's general terms and conditions for Purchase Orders or Master Contracts included as an exhibit with this Request for Proposal (RFP) shall apply unless otherwise noted.

2.3. Compliance with Ordinances, Regulations, and Laws

The County reserves the right to require proof that the Proposer is an established business and is abiding by all applicable local, State, and Federal ordinances, regulations, and laws. This may include, but is not limited to, business tax receipts, business licenses, Florida sales tax registration, Federal Employers Identification Number, and/or registration with the Florida Department of State, Division of Corporations' Sunbiz website at www.sunbiz.org.

2.4. Agreement Cancellation

1. The County reserves the right to cancel any Agreement resulting from this Request for Proposal (RFP) without cause with a minimum thirty (30) day written notice to the Contractor.
2. The Contractor may cancel the Agreement resulting from this Request for Proposal (RFP) without cause with a minimum thirty (30) days written notice to the County.

2.5. Proposer's Responsibility

The Proposer, by submitting a Response, represents that:

1. The Proposer has read and understands the Solicitation in its entirety and that the Response is made in accordance therewith;

2. The Proposer possesses the capabilities, resources, and personnel necessary to provide efficient and successful service to the County;
3. The Proposer has made all investigations and examinations necessary to ascertain site and/or local conditions and requirements affecting the full performance of the contract and to verify any representations made by Flagler County, Florida, upon which the Proposer will rely. If the Proposer receives an award because of its Response, failure to have made such investigations and examinations will in no way relieve the Proposer from its obligations to comply in every detail with all provisions and requirements of the contract, nor will a plea of ignorance of such conditions and requirements be accepted as a basis for any claim by the Proposer for additional compensation or relief; and,
4. The Proposer will be held responsible for any and all discrepancies, errors, etc., in discounts or rebates which are discovered during the Agreement term or up to and including three (3) fiscal years following the County's annual audit.

2.6. Execution of Offer

Offer shall contain a signature in the space(s) provided of a representative authorized to legally bind the Proposer to the provisions therein. All spaces requesting information from the Proposer or asking a question of the Proposer shall be completed.

2.7. Opening

Pursuant to Section 119.071, Florida Statutes, responses and the completed tabulation will be available for inspection within thirty (30) days of Solicitation opening. Contact the Office of Procurement and Contracts during regular business hours to inspect responses and the completed tabulation or go to the County's ePROCUREMENT PORTAL for inspection of the completed tabulation. The foregoing notwithstanding, if, prior to the County making responses available for inspection, the County rejects all responses and concurrently provides notice of the County's intent to reissue the solicitation, then the County may avail itself of the exemption for rejected responses set forth in Section 119.071, Florida Statutes, to the extent such Section may apply.

Solicitation openings and public meetings may be attended either in person or remotely. Solicitation openings may be accessed remotely as described in the introduction timeline section of this Solicitation.

In accordance with the American Disabilities Act and Section 286.26, Florida Statutes, persons with disabilities needing a special accommodation to participate in the proceedings, or an interpreter to participate in any proceedings, should contact the Office of Procurement and Contracts at (386) 313-4008 two (2) business days before any meeting date.

2.8. Public Records Law

Pursuant to section 119.0701(2)(a), Florida Statutes, the County is required to provide Contractor with this statement and establish the following requirements as contractual obligations pursuant to the Contract:

IF THE CONTRACTOR HAS QUESTIONS REGARDING THE APPLICATION OF CHAPTER 119, FLORIDA STATUTES, TO THE CONTRACTOR'S DUTY TO PROVIDE PUBLIC RECORDS RELATING TO THIS CONTRACT, CONTACT THE CUSTODIAN OF PUBLIC RECORDS AT 386-313-4001, PUBLICRECORDS@FLAGLERCOUNTY.GOV, BY MAIL, FLAGLER COUNTY BOARD OF COUNTY COMMISSIONERS, OFFICE OF PROCUREMENT AND CONTRACTS , ATTN: ADMINISTRATION, 1769 E. MOODY BLVD, BLDG. 2, BUNNELL, FL 32110.

By entering into this Contract, Contractor acknowledges and agrees that any records maintained, generated, received, or kept in connection with, or related to the performance of services provided under, this Contract are public records subject to the public records disclosure requirements of section 119.07(1), Florida Statutes, and Article I, section 24 of the Florida Constitution. Pursuant to section 119.0701, Florida Statutes, any Contractor entering into a contract for services with the County is required to:

1. Keep and maintain public records required by the County to perform the services and work provided pursuant to this Contract.
2. Upon request from the County's custodian of public records, provide the County with a copy of the requested records or allow the records to be inspected or copied within a reasonable time at a cost that does not exceed the cost provided in Chapter 119, Florida Statutes, or as otherwise provided by law.
3. Ensure that public records that are exempt or confidential and exempt from public records disclosure requirements are not disclosed except as authorized by law for the duration of the Contract term and following completion or termination of the Contract if the Contractor does not transfer the records to the County.
4. Upon completion or termination of the Contract, transfer, at no cost, to the County all public records in the possession of the Contractor or keep and maintain public records required by the County to perform the service. If the Contractor transfers all public records to the County upon completion or termination of the Contract, the Contractor shall destroy any duplicate public records that are exempt or confidential and exempt from public records disclosure requirements. If the Contractor keeps and maintains public records upon completion or termination of the Contract, the Contractor shall meet all applicable requirements for retaining public records. All records stored electronically must be provided to the County, upon request from the County's custodian of public records , in a format that is compatible with the information technology systems of the County.

Requests to inspect or copy public records relating to the County's Contract for services must be made directly to the County. If Contractor receives any such request, Contractor shall instruct the requestor to contact the County. If the County does not possess the records requested, the County shall immediately notify the

Contractor of such request, and the Contractor must provide the records to the County or otherwise allow the records to be inspected or copied within a reasonable time.

Contractor acknowledges that failure to provide the public records to the County within a reasonable time may be subject to penalties under section 119.10, Florida Statutes. Contractor further agrees not to release any records that are statutorily confidential or otherwise exempt from disclosure without first receiving prior written authorization from the County. Contractor shall indemnify, defend, and hold the County harmless for and against any and all claims, damage awards, and causes of action arising from the Contractor's failure to comply with the public records disclosure requirements of section 119.07(1), Florida Statutes, or by Contractor's failure to maintain public records that are exempt or confidential and exempt from the public records disclosure requirements, including, but not limited to, any third party claims or awards for attorney's fees and costs arising therefrom. Contractor authorizes County to seek declaratory, injunctive, or other appropriate relief against Contractor from a Circuit Court in Flagler County on an expedited basis to enforce the requirements of this section.

2.9. Confidential Information and Infringement

A. Confidential Information and/or Trade Secret do not include the following:

   1. Information already known or independently developed the party in possession; or
   2. Information in the public domain through no wrongful act of the party in possession; or
   3. Information received by the party in possession from a third party who was free to disclose it; or
   4. Information regularly disclosed to third parties without restriction on disclosure; or
   5. Information required to be disclosed by law or an order of a court of competent jurisdiction.

B. Confidential Information and Infringement. If Contractor is licensing or developing software (including derivative works) for use by the County, Contractor grants County a perpetual, fully paid, non-assignable, non-exclusive, royalty-free license to use Contractor's software deliverables developed or licensed under a Contract. Said license includes software owned by Contractor, which is furnished under a Contract, for County's internal use with such use to include the right to modify such deliverable(s) and to create derivative works for such internal use including, without limitation, the right to use such deliverable(s).

C. If Contractor is licensing, providing, or developing software including derivative works for use by the County, Contractor agrees to protect and indemnify and hold harmless the County, its agents, elected officials and employees of the County from and against any and all claims, demands, actions, and causes of action which may arise asserting that all or any part of the Contractor licensed applications provided under any software owned by Contractor and licensed to County or provided by Contractor for use thereof by the County, infringes or misappropriates any third party's United States patent, copyright or any trade secret protected under United States law.

1. In addition to the foregoing indemnification provision, Contractor shall also take the following steps to assure that County can continually use the software which Contractor has directly licensed to County or provided for use thereof by the County in substantially the same manner delivered or subsequently enhanced or modified by:

    a. Promptly replacing the allegedly infringing or misappropriated item or items with compatible, functionally equivalent items which are not alleged to be infringing or misappropriated; or

    b. Promptly modifying the alleged infringing or misappropriated item or items to eliminate the alleged infringement or misappropriation without impairing County's intended use of the Licensed Applications and/or Sublicensed Applications in any manner; or

    c. Promptly procuring the right for the County to continue to use the Licensed Applications and/or Sublicensed Applications without modification; and

    d. Unless otherwise agreed by the parties, promptly shall mean for the purposes of this Section that the events described herein shall occur in no less than sixty (60) days from the date that notice of the claim is received by Contractor unless otherwise agreed by the Parties.

D. In the event that Contractor does not enable the County to use that which Contractor has delivered through accomplishing one or more of the alternatives set forth in above within aforementioned time period set forth herein during the term of the contract, Contractor shall be in material default of said contract and subject to Termination.

E. If Contractor is granting a license or develops software for the County under this contract, it hereby warrants and represents that:

1. Contractor is the sole owner of all right, title, and interest in and to the Contractor licensed software, user manuals and documentation, including all patents, copyrights, copyright rights, trade secrets, trademarks, trade names and all proprietary and intellectual rights and confidential information contained therein, and that it is authorized to enter into a Contract and grant County a perpetual license; and

2. No portion of any licenses or right granted to the County to use Contractor's software pursuant to the terms of the applicable software license contract of Contractor for any work performed under a Contract violates or is protected by right, title, interest or similar right of any third person or entity.

2.10. Clarification, Correction of Entry, Minor Irregularities

The Flagler County Board of County Commissioners reserves the right to allow for the clarification of questionable entries and the correction of obvious mistakes. The County reserves the right to waive minor irregularities in Submittals, providing such action is in the best interest of the County. Minor irregularities are

defined as those that have no adverse effect on the County's best interests and will not affect the outcome of the selection process by giving the Proposer an advantage or benefit not enjoyed by other Proposers.

2.11. Revisions, Addenda, Questions & Answers

1. It is incumbent upon each Proposer to carefully examine the specifications, scope of work/service, terms, and conditions of this Solicitation. The posting of answers through the County's ePROCUREMENT PORTAL is the only official method by which interpretation, clarification, or additional information can be given. Questions and exceptions concerning any Section of this Solicitation shall be directed through the question-and-answer section of the County's ePROCUREMENT PORTAL.
2. If it becomes necessary for the County to revise or clarify any part of this Solicitation it will be updated on the County's ePROCUREMENT PORTAL by the posting of answers to questions received and/or the revision of solicitation language/documentation. It is each Proposer's responsibility to check the County's ePROCUREMENT PORTAL for any posted answers, and/or solicitation changes. Each Proposer shall ensure that they have reviewed all questions & answers and/or changes to this Solicitation before submitting their Response. By submitting a response, Proposers acknowledge that they have reviewed all posted answers, and/or solicitation changes prior to the posted closing date and time.
3. Each answer issued by the County shall become a material part of this Solicitation. Answers posted by the County and/or changes made to the Solicitation are authoritative and shall be considered an addendum to the Solicitation.
4. All information in this Solicitation, including information provided through the Question & Answer feature, are incorporated into the Solicitation and/or any Contract resulting from this Solicitation.
5. Questions and exceptions shall be submitted before12:00 pm on Friday, August 14, 2026 . Thereafter, no further questions or exceptions will be accepted or reviewed by the County and Proposer's right to submit questions or exceptions will terminate and any questions or exceptions not previously made shall be deemed waived. Oral representations will not be binding on the County.

2.12. Incurred Expenses

The County has no obligation to make an award as a result of this Solicitation, nor shall the County be responsible for any cost or expense which may be incurred by any Proposer in preparing and submitting a Response, or any cost or expense incurred by any Proposer prior to the execution of a Purchase Order or Contract.

2.13. Disadvantaged Businesses

The Flagler County Board of County Commissioners has adopted policies which assure and encourage the full participation of Minority Business Enterprises (MBE), Women-owned Business Enterprises (WBE), and Veteran-owned Business Enterprises (VBE) in the provision of goods and services. The County encourages joint ventures with these businesses.

2.14. Local Preference

It is the policy of the Board that Flagler County vendors are given preference in the procurement process, unless otherwise prohibited or waived by the County Administrator.

The term Flagler County Vendor means any business: having a physical location within the boundaries of Flagler County for at least twelve (12) months immediately prior to the issuance of the request for Quotes, Bids or Proposals by the County; holding any business licenses required by the County, and/or, the municipalities, if applicable; and employing at least one (1) full time employee, or two (2) part-time employees whose primary residence is in Flagler County, or, if the business has no employees, the business shall be at least fifty (50) percent owned by one (1) or more persons whose primary residence is in Flagler County.

It is the vendor's responsibility to request Local Preference by submitting a completed Local Preference Affidavit with its sealed proposal.

2.15. Pricing

Unless otherwise specified, prices offered shall:

- remain firm for a period of at least one hundred and twenty (120) days from the date of Solicitation opening, prior to award being made;
- include all expenses necessary to provide the service at the location specified (for services).

2.16. FOB Destination

The FOB point for this contract and for all purchases made under it shall be at the project site in Flagler County, Florida. Delivery will not be complete until the using department has accepted each item. Delivery to a common carrier shall not constitute delivery to the ordering agency. All disputes arising out of shipping prior to acceptance by Flagler County shall be between the Contractor and the carrier.

2.17. Payment Terms

Unless otherwise stated in the Special Terms and Conditions, the County will remit full payment on all undisputed invoices within forty five (45) days from receipt by the appropriate person(s) (to be designated at time of contract) or receipt of all products or services ordered in accordance with the Local Government Prompt Payment Act, Part Vii, Chapter 218, Florida Statutes.

2.18. Unusual Costs

The Contractor may petition the County at any time for an additional rate adjustment on the basis of extraordinary and unusual changes in the costs of operation that could not reasonably be foreseen by a prudent operator and which, by all reasonable expectations, will continue for at least one (1) year. If the Contractor petitions for such an increase, the Contractor shall also petition for a rate reduction on the basis of extraordinary and unusual changes in the costs of operation that could not reasonably be foreseen by a prudent operator and which, by all reasonable expectations, will continue for at least one (1) year; failure to make such petition may be grounds for contract termination.

The Contractor's request shall contain substantial proof and justification to support the need for the rate adjustment. The County may request from the Contractor, and the Contractor shall provide further information as may be reasonably necessary in making its determination. The County shall approve or deny the request, in its sole discretion, in whole or in part, within sixty (60) days of receipt of the request and all other additional information required by the County. Any price redetermination shall be solely based upon the documentation provided and the County reserves the right to rescind any price relief granted should the circumstances change, and prices go down.

2.19. Additional Terms & Conditions

The Flagler County Board of County Commissioners reserves the right to reject offers containing terms or conditions contradictory to those requested in this Solicitation.

2.20. Taxes

County is exempt from Manufacturers' Federal Excise Tax (Exemption# 59-78-0089K) and Florida sales tax (Exemption# 85-8013245979C-5). Certificates are available and can be obtained by emailing purchasing@flaglercounty.gov.

2.21. Discounts

All discounts except those for prompt payment shall be considered in determining the lowest net cost for evaluation purposes. All discounts shall remain firm for the term of the contract.

2.22. Meets/Minimum Specifications

The specifications listed in the Scope of Work are the minimum required performance specifications for this Solicitation; they are not intended to limit competition nor specify any particular Proposer, but to ensure that the County receives quality services. The Proposer represents that all offers to this Solicitation shall meet or exceed the minimum requirements specified.

2.23. Samples

When required, samples of products shall be furnished with Response to the County at no charge. Samples may be tested and will not be returned to the Proposer. The result of any and all testing shall be made available upon written request.

2.24. Silence of Specifications

The apparent silence of these specifications or any supplemental specifications as to details or the omission from same of any detailed description concerning any point, shall be regarded as meaning that only the best commercial practices are to prevail and that only materials of first quality and correct type, size, and design are to be used. All workmanship shall be first quality. All interpretations of specifications shall be made upon the basis of this statement.

2.25. Change in Scope of Work/Service

1. The County may order changes in the work/service consisting of additions, deletions, or other revisions within the general scope of the contract. No claims may be made by the Contractor that the scope of the project or of the Contractor's services has been changed, requiring changes to the amount of compensation to the Contractor or other adjustments to the contract, unless such changes or adjustments have been made by written amendment or change order to the contract signed by the County and the Contractor.
2. If the Contractor believes that any particular work/service is not within the scope of work/service of the contract, is a material change, or will otherwise require more compensation to the Contractor, the Contractor must immediately notify the County's designated representative in writing of this belief. The Contractor and County shall negotiate modifications to the contract in good faith and agree upon equitable adjustment for any changes in services or other obligations required of the Contractor due to such modifications. The Contractor must assert its right to an adjustment under this clause within thirty (30) days from the date of receipt of the written order.
3. The County reserves the right to negotiate with the awarded Contractor(s) without completing the competitive bidding process for materials, products, and/or services similar in nature to those specified within this solicitation for which requirements were not known when the Solicitation was released.

2.26. Governing Laws/Venue

This Agreement shall be interpreted and construed in accordance with and governed by the laws of the State of Florida without giving effect to any choice of law principles. Jurisdiction over, and venue for, any controversies or legal issues arising out of this contract shall, if in state court, be exclusively in the 7th Judicial Circuit in and for Flagler County, Florida. By entering into this contract, Contractor and County hereby expressly waive any rights either party may have to a trial by jury of any civil litigation related to the contract, and, unless otherwise expressly provided herein, each agrees to bear its own costs and attorney's fees relating to any dispute arising under the contract.

2.27. Assignment

Contractor may not assign or otherwise convey Contractor's rights and/or obligations under the contract without obtaining County's prior written consent, which consent County may withhold, limit and/or condition in County's sole discretion, including, but not limited to, requiring the Contractor or his/her proposed successor in interest to post a performance bond. Any consent by the County under this Section shall be by written amendment to the contract in a form and substance specified by the County in its sole discretion. If Contractor desires to assign or otherwise convey its rights and/or obligations under the contract, Contractor shall, no less than thirty (30) days prior to the assignment's proposed effective date, provide County with a written request for County's consent. Failure to provide such notice may result in the County assessing a processing fee of Five Hundred Dollars (US $500.00); however, payment of such fee shall not entitle the Contractor to the County's acceptance or approval of its request for assignment.

Nothing herein shall preclude the right of the County to waive its rights under this Section, but no waiver shall be granted by the County without a written and duly executed amendment to the contract.

2.28. Content of Solicitation/Response

The contents of this Solicitation, all terms, conditions, specifications, and requirements included herein and the accepted and awarded response thereto shall be incorporated into a contract to purchase and become legally binding. Any terms, conditions, specifications, and/or requirements specific to the item or service requested in this Solicitation shall supersede the requirements as specified in the *General Terms and Conditions* and/or *Special Terms and Conditions* section(s) of this Solicitation.

2.29. Contract

The contents of this Solicitation and all provisions of the successful proposal deemed pertinent by the County shall be incorporated into a contract and become legally binding on the selected Proposer and County. The content of the contract may contain changes as a result of the Solicitation process and the content of the submittal received. The contract shall, at minimum, include the substantive terms and conditions as outlined in the Solicitation and be subject to review by the County Attorney or designee prior to approval and execution for determination of legal form and substantive sufficiency, and shall contain an order of precedence and may contain those additional terms and conditions that the County deems in its best interest.

The County shall be responsible for only those orders placed by the County pursuant to the contract or on an authorized signed Purchase Order. The County shall not be responsible for any order, change substitution or any other discrepancy from the Purchase Order or Master Agreement. If there is any question about the authenticity of a Purchase Order, contract, or change order, the Proposer should promptly contact the Office of Procurement and Contracts at (386) 313- 4008.

2.30. Disclosure of Response Content

All material submitted becomes the property of the County and may be returned only at the County's option. The County has the right to use any or all ideas presented in any reply to this Solicitation. Selection or rejection of any Response does not affect this right. Flagler County, Florida, is governed by the Public Record Law, Chapter 119, Florida Statutes (F.S.).

2.31. Limitation of Liability/Indemnification

The Contractor shall indemnify, defend, and hold harmless the County including its districts, authorities, separate units of government established by law, ordinance or resolution, partners, elected and non-elected officials, employees, agents, volunteers, and the State of Florida, including its officers and employees, from and against all liabilities, damages, losses and costs, including, but not limited to, reasonable attorney's fees, to the extent caused by the negligence, recklessness, or intentional wrongful misconduct of the Contractor or its subcontractors, agents, employees, or any persons employed or utilized by the Contractor in the performance of the Contractor's obligations or services under this contract. Such obligations or services shall not be construed to negate, abridge, or reduce other rights or obligations of indemnity which would otherwise exhaust as to a party or person describe in this contract.

In all claims against the County, Contractor's indemnification obligation shall not be limited in any way by any limitation on the amount or type of damages, compensation or any benefits payable by or for Contractor, or its employees, agents, contractors, or subcontractors pursuant to Contractor's insurance. The Contractor's indemnification obligation shall survive the expiration or termination of the contract.

2.32. Payment of Subcontractors

Contractor shall save and hold the County harmless from any and all claims or actions by Contractor's subcontractor(s) for payment of monies such subcontractor claims to be owed by Contractor for Work performed under the contract. Nothing in the contract shall create any obligation on the part of the County to pay directly to any Subcontractors any monies due for Work performed under the contract.

2.33. Infringement Claim

For all licensed software or derivate works of the licensed software used by County under the resulting contract, Contractor agrees to protect, defend, indemnify, and hold harmless the County, its agents, elected officials and employees from and against any and all claims, demands, actions, and causes or action which may arise asserting that all or any part of Contractor's licensed software or applications that are owned and licensed by Contractor to County for use thereof by County, infringes or misappropriates any third party's valid state patent, copyright, trademark, or any trade secret protected under United States law. In the event of an infringement claim, Contractor shall have the option: (i) to procure for County the right to continue using any product or service found to be infringing; (ii) to replace any such infringing product or service with a non-infringing product or service; or (iii) to modify such infringing product or service to make it non-infringing. Contractor shall have no obligation under this Section if the Infringement Claim is based upon the use of the system in combination with other hardware or software applications not furnished by Contractor, or if such a claim arises from County's modification of the system without the authorization of Contractor.

2.34. Sovereign Immunity

County expressly retains all rights, benefits and immunities of sovereign immunity in accordance with Section 768.28, Florida Statutes (as amended). Notwithstanding anything set forth in any section of this contract to the contrary, nothing in this contract shall be deemed as a waiver of immunity or limits of liability of the County beyond any statutory limited waiver of immunity or limits of liability which may have been or may be adopted by the Florida Legislature and the cap on the amount and liability of the County for damages, regardless of the number or nature of claims in tort, equity, or contract, shall not exceed the dollar amount set by the legislature for tort. Nothing in this contract shall inure to the benefit of any third party for the purpose of allowing any claim against the County, which claim would otherwise be barred under the doctrine of sovereign immunity or by operation of law.

2.35. Compliance with Federal E-Verify Regulations

Contractor covenants and agrees to the following provisions, as required by law:

1. If and to the extent the contract meets the criteria set forth at 48 C.F.R. § 52.222-54(e), the criteria of 48 C.F.R. § 52.222-54 are hereby incorporated by reference into this contract as if fully set forth herein.

2. Contractor and any of Contractor's Subcontractors shall register with and utilize the U.S. Department of Homeland Security's E-Verify system to verify the employment eligibility and work authorization status of all new employees hired by Contractor (or Contractor's Subcontractors) on or after the effective date of this contract and thereafter during the remaining term of the contract.

3. In the event Contractor enters into a subcontract, Contractor shall require, via written contract, the Subcontractor agree to: (i) register with and utilize the U.S. Department of Homeland Security's E-Verify system to verify the employment eligibility of all new employees hired on or after the effective date of the subcontract and thereafter during the remaining term of the subcontract; and (ii) provide Contractor with an affidavit stating that the Subcontractor does not employ, contract with, or subcontract with an unauthorized alien. Contractor shall maintain a copy of such affidavit for the duration of this contract or the subcontract, whichever is longer. Contractor shall provide a copy of such affidavit to the County before the Subcontractor begins any work associated with the contract. If the County has a good faith belief that a subcontractor knowingly violated the requirements set forth in this Section or Sections 448.09(1) or 448.095 of the Florida Statutes, but also has a good faith belief Contractor otherwise complied with this Section and applicable law, the County shall promptly notify Contractor and order Contractor to immediately terminate its contract with the Subcontractor. Failure to comply with said order shall constitute a material breach of this contract.

4. If the County has a good faith belief Contractor has knowingly violated, or if Contractor is found to have violated, this Section; Section 448.09(1), Florida Statutes; Section 448.095, Florida Statutes; or

the Presidential Executive Order and subsequent Federal Acquisition Regulation (FAR) rule requiring federal contractors to use E-Verify, if applicable, then the following shall be true: (i) such violation shall be a material breach of this contract by Contractor; (ii) Contractor shall indemnify, defend, and hold harmless the County from any resulting costs or expenses, including fines or penalties levied by a government agency and the County's loss or repayment of grant funds by breaching the requirements of this section; (iii) the County may terminate this contract immediately and without penalty and such termination shall not be or be considered a breach of this contract; and (iv) Contractor shall be liable for any additional costs incurred by the County as a result of the termination of the contract. Contractor acknowledges and understands that if the County terminates this contract in accordance with this Section, Contractor shall be ineligible for award of a public contract for at least one (1) year after the date on which the Agreement was terminated.

2.36. Public Entity Crimes

Pursuant to paragraph 287.133(2)(a), Florida Statutes, a person or affiliate who has been placed on the convicted vendor list following a conviction for a public entity crime may not submit a bid, proposal, or reply on a contract to provide any goods or services to a public entity; may not submit a bid, proposal, or reply on a contract with a public entity for the construction or repair of a public building or public work; may not submit bids, proposals, or replies on leases of real property to a public entity; may not be awarded or perform work as a contractor, supplier, subcontractor, or consultant under a contract with any public entity; and may not transact business with any public entity in excess of the threshold amount provided in section 287.017, Florida Statutes, for CATEGORY TWO for a period of thirty-six (36) months following the date of being placed on the convicted vendor list.

By entering into this contract, the Contractor represents and warrants that it is not on the convicted vendor list and not under investigation for violation of any state or federal law relating to public entity crimes. The Contractor further represents and warrants that its subcontractors and implementer, if any, are not on the convicted vendor list and not under investigation for violation of any state or federal law relating to public entity crimes.

2.37. Use of County Logo

The County owns and retains all proprietary rights in its logos, trademarks, trade names, and copyrighted images (Intellectual Property). As such, nothing in this Solicitation permits or shall be construed as authorizing Proposer to use or display County's Intellectual Property on Proposer's submittal documents or proposal (including any exhibits attached thereto) submitted to County by or on behalf of Proposer in response to this solicitation. The County has the right to redact the County Logo displayed on any Response.

2.38. Training

Unless otherwise specified suppliers/providers may be required at the convenience of, and at no expense to, the County to provide training to County personnel in the operation and maintenance of any item purchased as a result of this Solicitation.

2.39. Acceptance

Products purchased as a result of this Solicitation may be tested for compliance with specifications. Items delivered not conforming to specifications may be rejected and returned at Contractor's expense. Those items and items not delivered by the delivery date specified in accepted offer and/or purchase order may be purchased on the open market. Any increase in cost may be charged against the Contractor.

2.40. Safety Warranty

Any awarded Contractor including dealers, distributors, and/or manufacturers shall be responsible for having complied with all Federal, State, and local standards, regulations, and laws concerning the product or service specified, and the use thereof, applicable and effective on the date of manufacture or use or date in service including safety and environmental standards as apply to both private industry and governmental agencies.

2.41. Safety

The Contractor shall take the necessary precautions and bear the sole responsibility for the safety of the methods employed by the Contractor in performing the work. The Contractor shall, at all times, comply with the regulations set forth by federal, state, and local laws, rules, and regulations concerning "OSHA" and all applicable state labor laws, regulations, and standards. The Contractor shall indemnify and hold harmless the County from and against all liabilities, suits, damages, costs, and expenses (including attorney's fees and court costs) which may be imposed on the County because of the Contractor, Subcontractor, or supplier's failure to comply with the regulations.

2.42. Warranty

The Proposer agrees that, unless otherwise specified, the product and/or service furnished as a result of this Solicitation and award thereto shall be covered by the most favorable commercial warranty the Proposer gives to any customer for comparable quantities of such products and/or services and that the right and remedies provided herein are in addition to and do not limit any rights afforded to the Flagler County Board of County Commissioners by any other provision of the Solicitation/offer.

2.43. Award of RFP

The County reserves the right to award the Agreement to the Proposer(s) that the County deems to offer the best overall Proposal or solution, as defined in the solicitation section, Special Conditions - Evaluation Criteria. The County is therefore not bound to accept a proposal based only on lowest price. In addition, the County has the sole discretion and reserves the right to cancel this RFP, to reject any/all proposals, to waive any/all informalities and/or irregularities, or to re advertise with either the identical or revised specifications if it is deemed to be in the best interest of the County to do so. Nothing prohibits the County from rejecting and re soliciting when responses exceed budget, and the County must change the solicitation to lower costs. The

County also reserves the right to make multiple awards based on experience and/or qualifications of Proposers and to award only a portion of the items and/or services specified, if deemed to be in the County's best interest.

2.44. Other Agencies

All Contractors awarded contracts from this Solicitation may, upon mutual agreement, permit any municipality or other governmental agency to participate in an agreement under the same prices, terms, and conditions, if agreed to by both parties. It is understood that at no time will any city, municipality, or other agency be obligated for placing an order for any other city, municipality, or agency; nor will any city, municipality, or agency be obligated for any bills incurred by any other city, municipality, or agency. Further, it is understood that each agency will issue its own purchase order to the awarded Contractor(s).

2.45. County Facilities

County facilities are administrative facilities that provide services to the Flagler County public and any agencies that it serves. As such, activities in all buildings are critical to the provisioning of services to the public and shall not be interrupted by the Contractor's work activities.

2.46. Licenses, Certificates, and Permits

1. The County reserves the right to require proof that the Proposer is an established business and is abiding by the ordinances, regulations, and laws of their community and the state of Florida, such as but not limited to: Business Tax Receipts, business licenses, Florida sales tax registration, Federal Employers Identification Number, Registration with the Florida Department of State, and the Division of Corporations' Sunbiz at www.sunbiz.org.
2. The Proposer must be registered with the Florida Department of State Division of Corporations at www.sunbiz.org in order to provide services under the resulting contract.
3. If a license is required, the Proposer shall be licensed to perform the required work in accordance with the laws of the State of Florida and local ordinances. Proposer shall also verify that his/her subcontractors are licensed to perform the work in accordance with the laws of the State of Florida and local ordinances.
4. If applicable, the Proposer shall have a current professional registration certificate from the appropriate governing board. The Proposer must be properly registered at the time of its submittal to practice their profession in the State of Florida.
5. At time of Solicitation submittal, Proposer shall hold the required licensure to be the prime Contractor for all work to be performed under the resulting contract. If Proposer proposes to use a Subcontractor or sub-consultant to perform any work under the resulting contract such subcontractor and/or sub-consultant shall, at the time of Solicitation submittal, hold the required

licensure for all work to be performed under the resulting contract as a subcontractor and shall maintain such license(s) in full force and effect during the term of the resulting contract. All licenses and permits required to perform Contractor's duties under the resulting contract whether such license or permit is required by the federal government, State of Florida, Flagler County, or any municipality, shall be at Proposer's sole cost and expense, and shall not be a cost of the County. All required licenses and permits shall be maintained in full force and effect during the term of the resulting contract.

2.47. Records & Right to Audit

County shall have the right to audit the books, records, and accounts of Contractor and its Subcontractors that are related to the resulting contract. Contractor and its Subcontractors shall keep such books, records, and accounts as may be necessary in order to record complete and correct entries related to the resulting contract. Contractor shall preserve and make available, at reasonable times for examination and audit by the County, all financial records, supporting documents, statistical records, and any other documents pertinent to this contract for a retention period of five (5) years after completion or termination of the contract, and any renewals, as required by Item 65, General Records Schedule GS1-SL for State and Local Government Agencies, effective February 19, 2015 and the Florida Public Records Act (Chapter 119, Florida Statutes). Contractor shall, by written Contract, require its Subcontractors to agree to the requirements and obligations of this Section. Audits will be subject to applicable privacy and confidentiality laws and regulations and Contractor's privacy and confidentiality policies and procedures.

2.48. Claim Notice

The Contractor shall immediately report in writing to the County's designated representative or agent any incident that might reasonably be expected to result in any claim under any of the coverage mentioned herein. The Contractor agrees to cooperate with the County in promptly releasing reasonable information periodically as to the disposition of any claims, including a résumé of claims experience relating to all Contractor operations at the County project site. The designated representative for the County shall be:

Flagler County Board of County Commissioners

Human Resources/Risk Management Division

Address: 1769 E. Moody Blvd., Bldg. 2

Bunnell, Florida 32110

Telephone: 386-313-4035

Fax: 386-313-4107

2.49. Waiver and Limitation of Claims

Once the contract expires, or final payment has been requested and made, the awarded Contractor shall have no more than thirty (30) calendar days to present or file any claims against the County concerning the contract. After that period, any right to claims against the County by the Contractor concerning the contract are waived.

2.50. Compliance with Laws and Regulations

The Contractor shall be responsible to know and to apply all applicable federal and state laws, all local laws, ordinances, rules, regulations (including but not limited to the following statutes: Americans with Disabilities Act (ADA),Titles I, II and III of the ADA; Federal Immigration Reform and Control Act of 1986 (as amended); and Title VII of the Civil Rights Act of 1964 (as amended), and all orders and decrees of bodies or tribunals having jurisdiction or authority which in any manner affect the work, or which in any way affect the conduct of the work. Contractor shall observe and comply with all such laws, ordinances, rules, regulations, orders, and decrees for all work or services performed under the contract. The Contractor shall indemnify, defend and hold harmless the County and all its officers, agents, servants, and employees against any liability or claim made against the County arising from, or based on, the violation of any such law, ordinance, rule, regulation, order, or decree caused or committed by Contractor, its representatives, Subcontractors, sub-consultants, professional associates, agents, servants, or employees.
Pursuant to Section 287.05701, Florida Statutes, proposers are hereby notified that:

- The County shall not request documentation of or consider a vendors social, political or ideological interests when determining if the vendor is a responsible vendor: and
- The County may not give preference to a vendor based on the vendors social, political or ideological interests.

2.51. For Internet/Web Services

For the purposes of this paragraph, any services or products offered to public via the internet or online must comply with WCAG 2.0 AA in order to be deemed ADA compliant. The County will provide Contractor with prompt written notice with respect to any ADA deficiencies of which the County is aware and Contractor will promptly correct such deficiencies. If the County, the Department of Justice, or other governmental entity tasked with the enforcement of the ADA (“Enforcement Agency”) notes any deficiency in the facilities, practices, services, or operations of the Contractor furnished or provided in connection with this contract, Contractor shall, at no additional charge or cost to the County, immediately cure any such deficiencies without delay to the satisfaction of such Enforcement Agency. Contractor further agrees that it shall, to the extent permitted by law, indemnify, defend, and hold harmless the County against any and all claims, sanctions, or penalties assessed against the County, which claims, sanctions, or penalties arise or otherwise result from Contractor’s failure to comply with the ADA or WCAG 2.0 AA, for online or internet Services or products.

2.52. Scrutinized Companies-FL Statute Section 287.135 and 215.473

Contractor must certify that the company is not participating in a boycott of Israel. For contracts for goods or services of one million dollars or more, Contractor must also certify that Contractor is not on the Scrutinized

Companies that Boycott Israel List, not on the Scrutinized Companies with Activities in Sudan List, and not on the Scrutinized Companies with Activities in the Iran Petroleum Energy Sector List or has not been engaged in business operations in Cuba or Syria. The County will not contract for the provision of goods or services with (i) any company participating in a boycott of Israel, and (ii) for Contracts for goods or services of one million dollars or more, any other scrutinized company as described above. Submitting a false certification shall be deemed a material breach of contract. The County shall provide notice, in writing, to the Contractor of the County's determination concerning the false certification. The Contractor shall have five (5) calendar days from receipt of notice to refute the false certification allegation. If such false certification is discovered during the active contract term, the Contractor shall have ninety (90) days following receipt of the notice to respond in writing and demonstrate that the determination of false certification was made in error. If the Contractor does not demonstrate that the County's determination of false certification was made in error then the County shall have the right to terminate the contract and seek civil remedies pursuant to Section 287.135, Florida Statutes, as amended from time to time.

2.53. Human Trafficking Attestation Pursuant to Section 787.06, Florida Statutes

A duly authorized officer or representative of the Proposer (non-governmental entity) shall complete the included Flagler Human Trafficking Attestation Form in compliance with Section 787.06(13), Florida Statutes, (2024).

2.54. Modifications Due to Public Welfare or Change in Law

The County shall have the power to make changes in the contract as the result of changes in law and/or ordinances of Flagler County to impose new rules and regulations on the Contractor under the contract relative to the scope and methods of providing services as shall, from time to time, be necessary and desirable for the public welfare. The County shall give the Contractor notice of any proposed change and an opportunity to be heard concerning those matters. The scope and method of providing services as referenced herein shall also be liberally construed to include, but is not limited to, the manner, procedures, operations and obligations, financial or otherwise, of the Contractor. In the event any future change in Federal, State or County law or the ordinances of Flagler County materially alters the obligations of the Contractor, or the benefits to the County, then the contract shall be amended consistent therewith. Should these amendments materially alter the obligations of the Contractor, then the Contractor or the County shall be entitled to an adjustment in the rates and charges established under the contract. Nothing contained in the contract shall require any party to perform any act or function contrary to law. The County and Contractor agree to enter into good faith negotiations regarding modifications to the contract, which may be required in order to implement changes in the interest of the public welfare or due to change in law. When such modifications are made to the Agreement, the County and the Contractor shall negotiate in good faith, a reasonable and appropriate adjustment for any changes in services or other obligations required of the Contractor directly and demonstrably due to any modification in the contract under this clause.

2.55. Right to Require Performance

The failure of the County or Contractor at any time to require performance by the other of any provision hereof shall in no way affect the right of the County or Contractor thereafter to enforce same, nor shall waiver by the County of any breach of any provision hereof be taken or held to be a waiver of any succeeding breach of such provision or as a waiver of any provision itself.

In the event of failure of the Contractor to deliver services in accordance with the contract terms and conditions, the County, after due written notice, may procure the services from other sources and hold the Contractor responsible for any resulting additional purchase and administrative costs. This remedy shall be in addition to any other remedies that the County may have.

2.56. Force Majeure

Neither party shall be liable for any failure or delay in the performance of its obligations under the contract to the extent such failure or delay necessarily results from the occurrence of a Force Majeure Event beyond the control or reasonable anticipation of either party, including, but not limited to, compliance with any unanticipated government law or regulation not otherwise in effect at the time of execution of this contract, acts of God, acts of domestic or international terrorism, any virus, bacterium, or other microorganism capable of inducing physical distress, illness, or disease, whether due to a pandemic or otherwise, unforeseeable governmental acts or omissions, fires, strikes, natural disasters, wars, riots, transportation problems, and/or any other unforeseeable cause whatsoever beyond the reasonable control of the parties (and such cause being referred to as a “Force Majeure Event”). Accordingly, the parties further agree that:

1. Upon the occurrence of Force Majeure Event, the non-performing party shall be excused from any further performance of those obligations under this contract that are affected by the Force Majeure Event for as long as (a) the Force Majeure Event continues; and (b) the non-performing party continues to use commercially reasonable efforts to recommence performance whenever and to whatever extent possible without delay.
2. Upon the occurrence of a Force Majeure Event, the non-performing party shall notify the other party of the occurrence of such event and describe in reasonable detail the effect(s) of such event upon the party’s performance of its obligations and duties pursuant to this contract. Such notice shall be delivered or otherwise communicated to the other party within three (3) business days following the failure or delay caused by the Force Majeure Event, or as soon as possible after such failure or delay if the Force Majeure Event precludes the non-performing party from providing notice within such time period.
3. In the event of a Force Majeure Event, the time for performance by the parties under the applicable statement of work shall be extended for a period of time equal to the time lost by reason of such cause through execution of a Change Order pursuant to the terms of the contract.

2.57. Contractor's Personnel

1. The Contractor shall not discriminate against any employee or applicant for employment because of race, religion, color, sex, age, handicap, or national origin, except when such condition is a bona fide occupational qualification reasonably necessary for the normal operations of the Contractor. The Contractor agrees to post in conspicuous places, visible to employees and applicants for employment, notices setting forth the provisions of this nondiscrimination clause.
2. The Contractor, in all solicitations or advertisements for employees placed by or on behalf of the Contractor, shall state that such Contractor is an Equal Opportunity Employer.
3. The Contractor shall be responsible for ensuring that its employees, agents, and subcontractors comply with all applicable laws and regulations and meet federal, state, and local requirements related to their employment and position.
4. The Contractor certifies that it does not and will not during the performance of the contract employ illegal alien workers or otherwise violate the provisions of the federal Immigration Reform and Control Act of 1986, as amended.
5. Notices, advertisements, and solicitations placed in accordance with federal law, rule, or regulation shall be deemed sufficient for the purpose of meeting the requirements of this section.
6. The Contractor shall include the provisions of the foregoing paragraphs 3.59A.-E. above, in every subcontract or purchase order so that the provisions will be binding upon each Contractor.
7. The Contractor and any Subcontractor shall pay all employees working on this contract not less than minimum wage specified in the Fair Labor Standards Act (29 CFR 510-794) as amended.
8. The Contractor shall not disclose any information concerning the County, its products, services, personnel, policies, or any other aspect of its business learned by the Contractor or personnel furnished by the Contractor in the course of providing services pursuant to the contract which are not otherwise known to the general public.
9. Both Contractor and Subcontractors awarded a contract as a result of Local Preference, shall register all open positions related to this contract with the Center for Business Excellence (CBE), and submit appropriate affidavit showing compliance.

2.58. County/Contractor Relationship

1. Any awarded contractor shall provide the services required herein strictly under a contractual relationship with the County and is not, nor shall be, construed to be an agent or employee of the County. As an independent contractor, the awarded Contractor shall pay any and all applicable taxes required by law; shall comply with all pertinent Federal, State, and local statutes including, but not limited to, the Fair Labor Standards Act, the Americans with Disabilities Act, the Federal Civil Rights Act, and any and all relevant employment laws. The Contractor shall be responsible for

all income tax, FICA, and any other withholdings from its employees' or Subcontractor's wages or salaries. Benefits for same shall be the responsibility of the Contractor including, but not limited to, health and life insurance, mandatory Social Security, retirement, liability/risk coverage, and workers' and unemployment compensation.

2. The Contractor shall hire, compensate, supervise, and terminate members of its work force; shall direct and control the manner in which work is performed including conditions under which individuals will be assigned duties, how individuals will report, and the hours individuals will perform.

3. The Contractor shall not be provided special space, facilities, or equipment by the County to perform any of the duties required by the contract, nor shall the County pay for any business, travel, or training expenses or any other contract performance expenses not explicitly set forth in the specifications.

4. The Contractor, except as expressly set forth herein, shall not be exclusively bound to the County and may provide professional services to other private and public entities as long as it is not in direct conflict and does not provide a conflict of interest with the services to be performed for the County.

2.59. Disqualification of Proposers

1. Only one (1) Response from an individual firm, partnership or corporation under the same or under a different name will be considered. If a Proposer submitted more than one (1) Response for the work involved, all Responses submitted from such Proposer will be rejected.

2. Collusion among Proposers: If it is believed that collusion exists among the Proposers, the Responses of all participants in such collusion shall be rejected and no participants in such collusion will be considered in future proposals for the same work.

2.60. Debarment: Purpose and Intent

The County endeavors to solicit offers from, award contracts to, and consent to subcontracts with responsible vendors and contractors only. To further this policy, the County asserts its authority to debar certain vendors and contractors from participating in solicitations pursuant to the policies and procedures herein. The serious nature of debarment requires that this sanction be imposed only when it is in the public interest for the County's protection and not for purposes of punishment. Debarment is intended as a remedy in addition to, and not in substitution of, the evaluation of the responsibility of County vendors and contractors, and this policy and the procedures provided for herein shall not supplant or supersede County's authority to reject or otherwise terminate vendors or contractors based on findings of non-responsibility on a case-by-case basis.

2.61. Unit Prices and Interpretation

For the purpose of this Solicitation and evaluation of responses hereto the following shall apply:

Unit prices shall prevail over extended prices; written matter shall prevail over typed matter; numbers spelled in word form shall prevail over Arabic numerals ("one" over "1"). When not inconsistent with context words used in the present tense include the future, words in the plural number include the singular number, and words in the singular number include the plural number. The word "shall" is always mandatory and not merely directory.

2.62. Dispute Resolution

1. Good Faith Efforts to Resolve. The parties to this contract shall exercise their best efforts to negotiate and settle promptly any dispute that may arise with respect to this contract in accordance with the provisions set forth herein. The Contractor and County Project Manager shall use reasonable efforts to arrange personal meetings and/or telephone conferences as needed, at mutually convenient times and places, to address and work toward resolution of issues that arise in performance of this contract. Issues shall be escalated to successive management levels as needed.

2. Informal Dispute Resolution. If a dispute develops between the parties concerning any provision of this contract, or the interpretation thereof, or any conduct by the other party under these contracts, and the parties are unable to resolve such dispute within five (5) business days, that party, known as the Invoking Party, through its applicable Project Manager, shall promptly bring the disputed matter to the attention of the non-Invoking Party's Project Manager or designated representative, as the case may be, of the other party in writing ("Dispute Notice") in order to resolve such dispute.

3. Discovery and Negotiation / Recommended Procedures. Upon issuance of a Dispute Notice, the Project Managers or designated representative shall furnish to each other all non-privileged information with respect to the dispute believed by them to be appropriate and germane. The Project Managers or designees shall negotiate in an effort to resolve the dispute without the necessity of any formal proceeding. If such dispute is not resolved by the Project Managers or designees within five (5) County Work Days of issuance of the Dispute Notice, or such other time as may be mutually allowed by the Project Managers or designees as being necessary given the scope and complexity of the dispute, the Project Managers or designees may, depending upon the nature, scope, and severity of the dispute, escalate the dispute as indicated in Figure 1 below.

4. Formal Dispute Resolution. At any point after issuance of a Dispute Notice under this section, either party may request and initiate formal non-binding mediation before a single mediator, which mediation shall be completed within thirty (30) days of initiation or such longer time as may be agreed upon by both parties as being necessary for the mutual selection of a mediator and scheduling of such mediation. Any such mediation shall be convened and conducted in accordance with the rules of practice and procedure adopted by the Supreme Court of Florida for court-

ordered mediation, Rule 1.700 et seq. of the Florida Rules of Civil Procedure, and Chapter 44, Florida Statutes. If the dispute remains unresolved after conducting such mediation, then either party may proceed to finalize any pending termination remedies and commence litigation in a court of competent jurisdiction. Each party shall bear its own costs and attorney's fees for mediation of an issue arising under this contract.

5. Right to Terminate Reserved. Regardless of the dispute resolution procedures provided for in this Section, Dispute Resolution, nothing herein shall affect, delay, or otherwise preclude a party from terminating this contract in accordance with the provisions of Special Conditions, Termination, it being understood that these dispute resolution procedures are intended as a means of resolving disputes both during the term of this contract and after termination or expiration thereof.

Figure 1:

County Workdays	Contractor's Representative	County Representative
10	Contractor's Project Manager	County's Project Manager
10	Contractor's Sr. Vice President of Sales	Contract Compliance Officer
20	Contractor's COO or President	County Administrator

2.63. Authorized Signatory

Proposer acknowledges that the name and title of the signatory (the "Authorized Signatory"), as completed, is authorized to execute contracts/agreements with Flagler County, and that submitting a Response via the County's ePROCUREMENT PORTAL shall be the act of and attributable to the Authorized Signatory to bind the company. By submitting this Response electronically, the Authorized Signatory does thereby adopt the electronic or conformed submittal as authorized firm commitment and for use as an official record by Flagler County.

2.64. Revisions, Addenda, Questions & Answers

All answers to questions of substance will be publicly published via the County's ePROCUREMENT PORTAL, Question & Answer feature.

Participants are required to review all revisions and answers to questions published. Revisions within the Solicitation as well as responses posted through the Question & Answer feature are authoritative and shall be considered an addendum to the Solicitation. All information in this Solicitation, including information provided through the Question & Answer feature are incorporated into the Solicitation or any Contract resulting from this Solicitation.

2.65. Acknowledgement of Solicitation Tabulation

All responses accepted by Flagler County are subject to the County's Terms and Conditions. Any and all additional Terms and Conditions submitted by Proposer(s) are rejected and shall have no force and effect. Responses from the Proposer(s) listed on the tabulation are the only responses received timely as of the closing date and time. All other responses submitted in response to the solicitation, if any, are rejected as late.

2.66. Availability of Personnel

Personnel described in the proposal shall be available to perform the services as described. All personnel shall be the employees, or agents of the Proposer, and not employees or agents of Flagler County.

2.67. Assignment of Contract

The selected Proposer may not make any assignments of their obligations resulting from this RFP without the prior written authorization of Flagler County.

2.68. Gratuities and Kickbacks

It is prohibited for the Contractor or any agent acting at the behest of the Contractor to offer, give, or agree to give any Flagler County employee or former Flagler County employee, or for any Flagler County employee or former Flagler County employee to solicit, demand, accept, or agree to accept from another person, a gratuity or an offer of employment in connection with any decision, approval, disapproval, recommendation, or preparation of any part of a program requirement or a purchase request, or to influence the content of any specification or procurement standard, render advice, investigate, audit, or act in any other advisory capacity to the County.

It shall be unethical for any payment, gratuity, or offer of employment to be made by or on behalf of a subcontractor under a contract to the prime contractor or higher tier sub-contractor or any person associated therewith, as an inducement for the award of a subcontract or order.

2.69. Drug-Free Workplace Certification

By submitting a proposal in response to this RFP, Contractor certifies that Contractor’s company is a drug-free workplace in accordance with Florida Statute 287.087.

2.70. Proprietary/Restrictive Specifications

Prospective Proposers, who feel the specifications contained herein are proprietary or restrictive in nature, thus potentially resulting in reduced competition, must contact the Purchasing Division upon receipt of this Request for Proposals and prior to proposal opening. Specifications which are unrelated to performance will be considered for deletion via addendum to this Request for Proposals.

2.71. Certification of Independent Price Determination

By submission of this proposal, the Proposer certifies, and in the case of a joint proposal each party thereto certifies as to its own organization, that in connection with this procurement:

A. The prices in this proposal have been arrived at independently, without consultation, collusion, communication, or agreement for the purpose of restricting competition, as to any matter relating to such prices with any other proposer or with any competitor.

B. Unless otherwise required by law, the prices which have been quoted in this proposal have not been knowingly disclosed by the Proposer and will not knowingly be disclosed by the Proposer prior to opening, directly or indirectly to any other Proposer or to any competitor; and,

C. No attempt has been made or will be made by the proposer to induce any other person or firm to submit or not to submit a proposal for the purpose of restricting competition.

2.72. Employment of Former Flagler County Employees By Any Person, Business, Or Organization Contracting With Flagler County

It shall be a violation for any person, business or organization contracting with Flagler County to employ in any capacity, any former Flagler County employee or member of Flagler County employee's immediate family within one year of that employee's separation from employment with the County, unless the employer or the former County employee files with the County Clerk, the County’s Employment Disclosure Statement . The penalty for this violation may include disqualification of the proposal submission.

3. Special Terms and Conditions

3.1. Closing Date and Mandatory Pre-Bid Conference

A. Request for Proposal (RFP): Closing Date
Response must be received through the County's eProcurement Portal before 2:00 pm on Monday, August 24, 2026. Responses received after this time will not be considered.

B. Pre-Bid Conference

1. A mandatory pre-bid conference will be held in the David I. Siegel Adult Day Care Center 1000 Belle Terre Blvd Palm Coast, FL 32164, at 10:00 am on Wednesday, August 12, 2026.

2. Flagler County does not discriminate upon the basis of any individual's disability status. This non-discrimination policy involves every aspect of County's functions including one's access to participation, employment, or treatment in its programs or activities. In accordance with the American Disabilities Act and Section 286.26, Florida Statutes, persons with disabilities needing a special accommodation to participate in the proceedings, or an interpreter to participate in any proceedings, should contact the Office of Procurement and Contracts at (386) 313-4008 two (2) business days before any meeting date.

3.2. Authorized Official

The Request for Proposal (RFP) response and all required forms must be submitted/signed by an official authorized to legally bind the Respondent to all Request for Proposal (RFP) provisions. A Memorandum of Authority may be submitted to document that the individual is authorized to commit the firm to a contract.

3.3. Definition of Responsive and Responsible for this Solicitation

Each Response shall be evaluated for conformance as responsive and responsible using the following criteria:

A. Proper submittal of ALL documentation as required by this Request for Proposal (RFP). (Responsive)

B. The greatest benefits to Flagler County as it pertains to: (Responsible)

1. Total Cost;

2. Delivery;

3. Past Performance. In order to evaluate past performance, all Respondents are required to submit a list of three (3) references / relevant projects completed within the last three (3) years that are the same or similar in magnitude to this Solicitation. Flagler County shall not be listed as a reference;

4. All technical specifications associated with this Request for Proposal (RFP);

5. **Any other criteria that may be specific to your Request for Proposal (RFP), not necessarily everything specified here.**

Financial Stability: All Respondents shall be prepared to supply a financial statement upon request, preferably a certified audit of the last available fiscal year.

Respondents are reminded that award may not necessarily be made to the lowest Response. Rather, award will be made to the most/lowest responsive, responsible, Respondent whose Response represents the best overall value to the County when considering all evaluation factors.

3.4. Local Preference Availability

This project is funded by monies that prohibit the local preference provision and local preference does not apply per the General Terms and Conditions section Local Preference.

3.5. Payment Terms

1. The County will remit full payment on all undisputed invoices within forty five (45) days from receipt by the appropriate person(s) (to be designated at time of Agreement) of the invoice(s) or receipt of all products or services ordered.
2. Pursuant to Chapter 218.74, Florida Statutes, the County will pay interest not to exceed one percent (1%) per month on all undisputed invoices not paid within forty-five (45) days after the due date.

By submitting a Response to Flagler County, the Respondent expressly agrees that, if awarded an Agreement, the County may withhold from any payment monies owed by the Respondent to the County for any legal obligation between the Respondent and the County, including, but not limited to, real property taxes, personal property taxes, fees, and commissions.

3.6. Award Term

The County is looking to promote partnership relationships within the policies and procedures of public procurement. Pursuant toward that end, the successful Respondent shall be awarded an Agreement for an initial three (3) year term with the option for two (2) subsequent one (1) year renewals. All renewals will be contingent upon mutual written agreement and, when applicable, approval of the Board of County Commissioners.

3.7. Termination

A. County may terminate this Agreement upon written notice to the Contractor at least thirty (30) days prior to desired termination date.

B. Awarded Respondent may terminate this Agreement upon written notice to the County at least ninety (90) days prior to desired termination date.

C. Upon receipt of notice of termination by the County from awarded Respondent or upon delivery of notice of termination from the County to Contractor, awarded Respondent shall:

1. Stop work under the Agreement on the date and to the extent specified in County's Notice of Termination;

2. Inform County of the extent to which performance is completed;

3. Place no further orders or subcontracts for materials, services or facilities except as may be necessary for completion of such portion of the Work/Services under the Agreement as is not terminated and with the prior approval of the County; and,

4. Assign to the County, in the manner, at the times, and to the extent directed by the County, all of the rights, title, and interest of the awarded Respondent under the orders and subcontracts so terminated.

D. For all undisputed outstanding invoices submitted to the County prior to the effective date of the termination and subject to Section Award Term, Section Payment Terms and this Section, Termination, the County shall cause payments to be made to awarded Respondent within forty-five (45) days of receipt of invoice. Awarded Respondent shall invoice the County for any sums awarded Respondent claims to be owed by County under this Agreement for work performed from the last invoice to the effective date of termination. County shall review such invoice for payment and County shall pay any undisputed amount within forty-five (45) days.

E. With the approval of the County and to the extent required by the County, the awarded Respondent shall, upon termination, settle all outstanding liabilities and all claims arising out of such termination. County's approval of such settlements shall be final for all the purposes of a termination under this Section, Termination. In addition, awarded Respondent shall transfer title and deliver to the County, in the manner, at the times, and to the extent, if any, directed by the County, Deliverables, work-in-progress, reports, models, studies, and other materials produced as a part of, or acquired in connection with the performance of the Work/Services terminated.

F. If awarded Respondent fails to cure a breach within ten (10) calendar days after receipt of notice from the County of said breach, the County may take over the Work/Services and complete the Work/Services, and the awarded Respondent shall be liable to the County for any increased cost of the Project reasonably incurred by the County to complete the awarded Respondent's unfinished Work/Services. As such, the County may apply unpaid Compensation due and owing to the awarded Respondent prior to the default as a set off against the costs incurred by the County for taking over such Work/Services.

G. The right of termination provided to the County and the awarded Respondent herein shall be cumulative of all other remedies available at law.

H. All provisions of this Agreement which impose or contemplate continuing obligations on a party will survive the expiration or termination of this Agreement.

3.8. Damages

Due to the nature of the services to be provided and the potential impact to the County for loss, the awarded Respondent cannot disclaim consequential or special damages related to the performance of this Agreement. The awarded Respondent shall be responsible and accountable for any and all damages, directly or indirectly, caused by the actions or inaction of its employees, staff, or Subcontractors. There are no limitations to this liability.

3.9. Evaluation Method

The County will appoint a committee consisting of department staff to evaluate the proposals and to make recommendation to the Board of County Commissioners. The County will be the sole judge of its own best interests, the proposals, and the resulting Contract, if any. The County's decisions will be final. Award will be made to the proposal which presents the best value to the County based on the entire evaluation process and all the information gathered.

Note: Respondents are prohibited from contacting any of the committee members, other than the appropriate Procurement Coordinator prior to the recommendation of award from the committee.

3.10. Presentations by Respondents

1. Flagler County, at its sole discretion, may ask individual Respondents to make oral presentations and/or demonstrations without charge to the County.
2. The County reserves the right to require any Respondent to demonstrate to the satisfaction of the County that the Respondent has the fiscal and managerial abilities to properly furnish the services proposed and required to fulfill the requirements of the Request for Proposal (RFP). The demonstration must satisfy the County, and the County shall be the sole judge of compliance.
3. Respondents are cautioned not to assume that presentations will be required and should include all pertinent and required information in their original proposal package.

3.11. Proposal Acceptance/Rejection

The County reserves the right to accept or reject any or all proposals received as a result of this Solicitation, or to negotiate separately with competing Respondents, and to waive any informalities, defects, or irregularities in any proposal, or to accept that proposal or proposals, which in the judgment of the proper officials, is in the best interest of the County.

3.12. Proposal Acceptance Period

Any Proposal in response to this Request for Proposal (RFP) shall be valid through December 31, 2026. At the end of this time the proposal may be withdrawn at the written request of the Respondent if no award has been made. If the Proposal is not withdrawn at that time it remains in effect until an award is made or the solicitation is canceled regardless of the status of the proposal bond. The County reserves the right to request an extension of the proposals if a Contract has not been executed by December 31, 2026.

4. Insurance Requirements

4.1. Required Types of Insurance.

The Contractor shall purchase and maintain at its own expense, during the term of the Agreement, the types and amounts of insurance with limits no less than those shown in the Required Types and Limits of Insurance Chart associated with this solicitation, in the form and from companies satisfactory to the County. The Required Types and Limits of Insurance Chart is a listing and general summary of insurance policies required and is not intended to be comprehensive as to the requirements of each specific policy. Contractors shall review the additional requirements in this section and ensure that the insurance policies comply with the specific terms and conditions therein.

For the purposes of indemnification of the County or an endorsement or insurance coverage under this Agreement/Contract under which the County is a “named insured”, “additional named insured”, or “additional insured”, the term “County” includes Flagler County (a body corporate and politic and a subdivision of the State of Florida), including its districts, authorities, separate units of government established by law, ordinance or resolution, partners, elected and non-elected officials, employees, agents, volunteers, and any party with whom the County has agreed by contract to provide additional insured status.

The policy limits for all required policies in the Required Types and Limits of Insurance Chart shall apply separately from one another and shall not be shared with any other coverage line or reduce the aggregate limit of any other insurance coverage form required.

Regardless of anything submitted as proof of insurance, Contractor shall comply with all requirements as stated in the Solicitation and/or Contract documents.

4.2. Subcontractors and Independent Contractors.

All subcontractors & independent contractors utilized by Contractor to provide services to County and its employees under this Agreement/Contract shall be required to maintain all insurance policies with the same terms, conditions, and requirements required of the Contractor in the Required Types and Limits of Insurance Chart and described in this Solicitation.

4.3. Claims Made Basis Insurance Policies.

All insurance policies written on a Claims Made Form shall maintain a retroactive date prior to or equal to the effective date of the Agreement. The Contractor shall purchase a Supplemental Extended Reporting Period (“SERP”) with a minimum reporting period of not less than three (3) years in the event the policy is canceled, not renewed, switched to occurrence form, or any other event which requires the purchase of a SERP to cover a gap in insurance for claims which may arise under or related to the Agreement. The Contractor’s purchase of the SERP shall not relieve the Contractor of the obligation to provide replacement coverage. In addition, the Contractor shall require the carrier immediately inform the Contractor, the County Risk Manager, and the Office of Procurement and Contracts of any contractual obligations that may alter its professional liability coverage under the Agreement.

4.4. Risk Retention Groups and Pools.

Contractor shall not obtain an insurance policy required under this Agreement from a Risk Retention Group or Pool.

4.5. Minimum Required Policies and Limits.

Minimum underlying policies, coverages, and limits shall include all policies listed in the Required Types and Limits of Insurance Chart.

4.6. Additional Insured, Policies, Coverages, Limits, Primary and Non-Contributory Basis.

Under all insurance policies where the County is required to be an additional insured, the coverage and limits provided to the County under Contractor's insurance policies shall be that listed in the Required Types and Limits of Insurance Chart or the Contractor's actual limits, whichever is higher. All coverage provided to the County as an additional insured by said policies shall be primary and shall not be additional to or contributing with any other insurance or self-insurance maintained by the County or any other insurance contractually available for the benefit of the County. Contractors performing construction projects shall utilize ISO Forms CG 20 38 and CG 20 37, or their equivalents to provide additional insured status to the County and any party to whom the County is contractually bound to provide additional insured status under a commercial general liability policy.

4.7. Disposal of Materials.

If the services provided require the disposal of any hazardous or non-hazardous materials off the job site, the disposal site operator must furnish a certificate of insurance for Pollution Legal Liability with coverage for bodily injury and property damage for losses that arise from the facility that is accepting the waste under the Agreement.

4.8. Workers' Compensation.

Workers' Compensation insurance is required for all employees of the Contractor, employed or hired to perform or provide work or services under the Agreement or that is in any way connected with work or services performed under the Agreement, without exclusion for any class of employee, and shall comply fully with the Florida Workers' Compensation Law (Chapter 440, Florida Statutes, Workers' Compensation Insurance) and include Employers' Liability Insurance with limits no less than the statutory amount. Policy shall be endorsed with NCCI form WC 00 03 13 providing a waiver of subrogation in favor of the County. If Contractor is using a "leased employee" or an employee obtained through a professional employer organization ("PEO"), Contractor is required to have such employees covered by worker's compensation insurance in accordance with Florida Worker's Compensation law. The PEO shall endorse its workers compensation policy with NCCI form WC 00 03 13 providing a waiver of subrogation in favor of the County, its employees and insurers.

(1) Contractor and its Subcontractors, or any associated or subsidiary company doing work on County property or under the Agreement must be named in the Workers' Compensation coverage or provide proof of their own

Workers' Compensation coverage, without exclusion of any class of employee, and with a minimum of the statutory limits per occurrence for Employer's liability coverage. Further, if the Contractor's Subcontractors fail to obtain Workers' Compensation insurance and a claim is made against the County by the uncovered employee of said Subcontractor of the Contractor, the Contractor shall indemnify, defend, and hold harmless the County from all claims for all costs including attorney's fees and costs arising under said employee(s) Workers' Compensation insurance claim(s).

4.9. Commercial General Liability Insurance.

The Contractor shall obtain and maintain Commercial General Liability insurance, with limits of not less than the amounts shown in the Required Types and Limits of Insurance Chart. Contractor shall not obtain an insurance policy wherein the policy limits are reduced by defense and claim expenses. Such insurance shall be issued on an occurrence basis and include coverage for the Contractor's operations, independent contractors, and Subcontractors protecting itself, its employees, agents, Contractors or subsidiaries, and their employees or agents for claims for damages caused by bodily injury, property damage, or personal or advertising injury, and products liability/completed operations including what is commonly known as Coverages A and B. Such policies shall include coverage for claims by any person as a result of actions directly or indirectly related to the employment of such person or entity by the Contractor or by any of its Subcontractors arising from work or services performed under the Agreement. Policy shall include either contractual insurance or a designated contract contractual liability coverage endorsement, indicating expressly the Contractor's Agreement to indemnify, defend and hold harmless the County as provided in the Agreement. The commercial general liability policy shall provide coverage to County when it is required to be named as an additional insured either by endorsement or pursuant to a blanket additional insured endorsement, for those sources of liability which would be covered by the latest edition of the standard Commercial General Liability Coverage Form (ISO Form CG 00 01), as filed for use in the State of Florida by the Insurance Services Office, without the attachment of any endorsements excluding or limiting coverage for Bodily Injury, Property Damage, Products/Completed Operations, Independent Contractors, Property of County in Contractor's Care, Custody or Control or Property of County on which contracted operations are being performed, Explosion, Collapse or Underground hazards (XCU Coverage, Contractual Liability or Separation of Insureds.

For construction related projects, County shall be added as additional insured to Contractor's policy by both ISO Endorsements CG 20 38 (Premises & Operations) and CG 20 37 (Products & Completed Operations) or their equivalents. If County has agreed by separate contract to require Contractor to name another party as an additional insured, Contractor shall add said party as an additional insured to the commercial general liability policy by ISO Endorsement CG 20 38 and CG 20 37, or their equivalents.

For non-construction projects, Contractor shall add County as additional insured by both ISO Endorsements CG 20 10 (Premises & Operations) and CG 20 37 (Products & Completed Operations) or their equivalent. If County has agreed by separate contract to require Contractor to name another party as an additional insured, Contractor shall add said party as an additional insured to the commercial general liability policy by both ISO Endorsement CG 20 10 and CG 20 37 or their equivalents.

All commercial general liability policies shall be endorsed to provide a waiver of subrogation in favor of the County and any other party required by this Agreement to be named as an additional insured.

4.10. Motor Vehicle Liability.

The Contractor shall secure and maintain during the term of the Agreement a motor vehicle liability policy with a combined single limit of no less than the amounts shown in the Required Types and Limits of Insurance Chart for bodily injury and property damage arising from the ownership, maintenance, or use of a motor vehicle. Policy shall be written with Coverage Symbol 1 (Any Auto), providing coverage for all autos operated regardless of ownership, or with Coverage Symbols 7, 8, & 9 (Scheduled, Hired, & Non-Owned vehicles). The County shall be an additional insured under this policy when required in the Required Types and Limits of Insurance Chart. If Motor Vehicle Liability is by endorsement to another policy required in the Required Types and Limits of Insurance Chart, then the limits for Motor Vehicle Liability shall be separate (they shall not be shared) and in addition to the underlying policy limits. If endorsed to another policy required in the Required Types and Limits of Insurance Chart, Motor Vehicle Policy Limits shall apply on a per occurrence basis and shall not have an aggregate limit.

4.11. Professional Liability.

The Contractor shall ensure that it secures and maintains, during the term of the Agreement, Professional Liability insurance with limits of no less than the amount shown in the Required Types and Limits of Insurance Chart in respect only to the project(s) contemplated by the Agreement. Such policy shall cover all the Contractor's or its Subcontractor's professional liabilities whether occasioned by the Contractor or its Subcontractors, or its agents or employees. For Contractors providing Architectural and Engineering related services, policy shall be broad enough to include errors and omissions specific to Contractor's professional liability for direct and contingent design errors and Architect's/Engineers professional liability with no exclusions for design-build work.

If the Contractor fails to secure and maintain the professional liability insurance coverage required herein, the Contractor shall be liable to the County and agrees to indemnify, defend, and hold harmless the County against all claims, actions, losses or damages that would have been covered by such insurance. The County shall be an additional insured under this policy when required in the Required Types and Limits of Insurance Chart.

4.12. Primary and Excess Coverage.

Any insurance required may be provided by primary and excess insurance policies.

4.13. General Insurance Requirements.

A. All insurance policies shall be issued by insurers licensed and/or duly authorized under Florida Law to do business in the State of Florida and all insuring companies are required to have a minimum rating of A- and a Financial category size of VIII or greater in the "Best Key Rating Guide" published by A.M. Best & Company, Inc.

B. Approval by County of any policy of insurance shall not relieve Contractor from its responsibility to maintain the insurance coverage required herein for the performance of work or services by the Contractor or its Subcontractors for the entire term of the Agreement and for such longer periods of time as may be required under other clauses of the Agreement.

C. **Waiver of Subrogation**. The Contractor hereby waives all rights against the County and its Subcontractors for damages by reason of any claim, demand, suit or settlement (including workers' compensation) for any claim for injuries or illness of anyone, or perils arising out of the Agreement. The Contractor shall require similar waivers from all its Subcontractors. Contractor's insurance policies shall include a waiver of subrogation in favor of the County. This provision applies to all policies of insurance required under the Agreement (including Workers' Compensation, and general liability).

D. **County Not Liable for Paying Deductibles**. For all insurance required by Contractor, the County shall not be responsible or liable for paying deductibles for any claim arising out of or related to the Contractor's business or any Subcontractor performing work or services on behalf of the Contractor or for the Contractor's benefit under the Agreement.

E. **Cancellation Notices**. During the term of the Agreement, Contractor shall be responsible for promptly advising and providing the County Risk Manager and the Office of Procurement and Contracts with copies of notices of cancellation or any other changes in the terms and conditions of the original insurance policies approved by the County under the Agreement within two (2) business days of receipt of such notice or change.

F. **Deductibles and Self-Insured Retentions**.

1. Contractors that maintain and administer a self-insured retention or a large deductible formal program exceeding the insurance requirements listed in the Required Types and Limits of Insurance Chart to fund either program may submit an exception request in accordance with the solicitation section detailing Revisions, Addenda, Questions & Answers to be considered for this solicitation. The request must include a summary of the program's design and funding method to manage fund deductibles or self-insured retentions. If additional information is necessary, the County will request more specific information, which must be provided by the Contractor. The County Risk Manager will review the information submitted and determine whether the program is acceptable to the County.

2. Contractors with no formal risk management program in place to manage and fund deductibles or self-insured retentions may not be considered.

3. Subject to County approval, Contractor may obtain a letter of credit in the amount equivalent to the deductible, which shall remain in effect during the term of the Agreement at no additional cost to the County.

G. Contractor's obligations or services shall not be construed to negate, abridge, or reduce other rights or obligations of indemnity or insurance defense of additional or named insureds which would otherwise exhaust or be unavailable as to a party or person described in this Contract.

4.14. Proof of Insurance.

A. The Contractor shall be required to furnish evidence of all required insurance in the form of certificates of insurance, which shall clearly outline all hazards covered as itemized herein, the amounts of insurance applicable to each hazard and the expiration dates.

B. The Contractor shall furnish proof of insurance acceptable to the County prior to or at the time of execution of the Agreement and the Contractor shall not commence work or provide any service until the Contractor has obtained all the insurance required under the Agreement and such insurance has been filed with and approved by the County. Upon request from the County, the Contractor shall furnish copies of all required policies and any changes, endorsements, or amendments thereto, immediately, to the County, the County Risk Manager, and Purchasing and Contracts Divisions, prior to and any time after the commencement of any contractual obligations. The Agreement may be terminated by the County, without penalty or expense to County, if at any time during the term of the Agreement proof of any insurance or copies of any insurance policies required hereunder are not provided to the County upon request.

C. All certificates of insurance shall clearly indicate that the Contractor has obtained insurance of the type, amount and classification required by this Section. No work or services by Contractor or its Subcontractors shall be commenced until County has approved these policies or certificates of insurance. Further, the Contractor agrees that the County shall make no payments pursuant to the terms of the Agreement until all required proof or evidence of insurance has been provided to the County. The Agreement may be terminated by the County, without penalty or expense, if proof of any insurance required hereunder is not provided to the County.

D. The Contractor shall file replacement certificates with the County at the time of expiration or termination of the required insurance occurring during the term of the Agreement. In the event such insurance lapses, the County expressly reserves the right to renew the insurance policies at the Contractor's expense or terminate the Agreement but County has no obligation to renew any policies.

E. The provisions of these sections, Required Types of Insurance; Insurance Requirements; and Proof of Insurance, shall survive the cancellation or termination of the Agreement.

4.15. Provide Proof of Insurance.

Provide Proof of Insurance - evidence of required insurance coverage or proof of insurability in the amounts indicated. If available, a properly completed ACORD Form is preferable. Upon award, final forms must contain the correct solicitation and/or project number and Flagler County contact person.

Firms that have owner/operators that have filed a "Notice of Election to be Exempt" shall submit a copy of the notice with the response.

4.16. Insurance Requirement

Before execution of the Agreement by the County and commencement of the operations and/or services to be provided, and during the duration of the Agreement, the Contractor shall file with the County current certificates of all required insurance on forms acceptable to the County, which shall include the following provisions:

A. All insurance policies shall be issued by companies authorized to do business under the laws of the State of Florida and acceptable to the County.

B. The Certificates shall clearly indicate that the Contractor has obtained insurance of the type, amount and classification as required for strict compliance with this insurance section.

C. No material change or cancellation of the insurance shall be effective without thirty (30) days prior written notice to the County.

The Contractor shall require and ensure that each of its subcontractors providing services here under (if any) procures and maintains, until the completion of the services, insurance of the types and to the limits specified herein.

Coverage Required – Unless otherwise specified, the Contractor shall, at its sole expense, maintain in effect at all times during the performance of the services insurance coverage with limits not less than those set forth below and with insurers and under forms of policies satisfactory to County.

Coverage

Minimum Amounts and Limits

- Worker's Compensation
  - Statutory requirements at location of Work
- Employer's Liability
  - $ 1,000,000 each occurrence
  - $ 1,000,000 disease, aggregate
  - $ 1,000,000 disease, each employee
- Commercial General Liability
  - $ 2,000,000 General Aggregate
  - $ 2,000,000 Products-Comp. Ops Aggerate

  - $ 1,000,000 Each Occurrence
  - $ 500,000 Fire Damage
  - $ 0 Medical Expense
- Automobile Liability
  - $ 1,000,000 Combined Single Limit (owned, hired and non-owned)
  - Option of Split Limits:
    - Bodily Injury
      - $ 1,000,000 per Person
      - $ 1,000,000 per Accident
    - Property Damage
      - $ 1,000,000
- Professional Liability
  - $ 1,000,000 per claim
  - $ 1,000,000 annual aggregate (when applicable)

Insurance carrier(s) must have a minimum financial rating of A-.

Coverage shall apply to the indemnity provided to Flagler County and shall include Flagler County its officers and employees, as additional insureds, as regards to liability arising out of the Contractor's performance of the work or the work performed by others on behalf of the Contractor under this Agreement. The insurance afforded to the County shall state that it is primary insurance and shall provide for a severability of interest or cross-liability clause. Prior to entering into the Agreement with the County, the Contractor shall furnish County with Certificates of Insurance (identifying on the face thereof the Project name and Agreement number) as evidence of the above required insurance and such Certificates shall include the following language: Flagler County BOCC as additional insured and an endorsement for which has been issued, subject to a requirement for recurring certificate of insurance every fifteen (15) days from the contract award date until, all obligations under the Contract/Agreement are completed.

Alternatively, in lieu of recurring certificates, the Contractor or Contractor may provide a certificate of insurance that contains a provision that coverage afforded under the policies will not be cancelled until at least thirty (30) days prior written notice has been given to the County, except that in the event of cancellation for nonpayment of premium the County shall receive notice as prescribed by state law (10 days). The cancellation clause should read as follows: “Should any of the described policies be canceled or material modified before the expiration date thereof, the issuing company will mail 30 day prior written notice to the

certificate holder named below, except that in event of cancellation for nonpayment of premium, the notice shall be 10 days unless a longer time is prescribed by Florida Statute."

The County will not maintain any insurance on behalf of the Contractor covering loss or damage to the work or to any other property of the Contractor.

None of the requirements contained herein as to types, limits and approval of insurance coverage to be maintained by the Contractor are intended to and shall not in any manner limit or qualify the liabilities or obligations assumed by the Contractor under the Agreement.

The Contractor shall deliver the original Certificate of Insurance and one copy to the agent of the County.

Notices, in original and one copy, of cancellation, termination and alteration of such policies shall also be provided to the agent of the County.

5. Scope of Work

5.1. Scope of Work

PROJECT BACKGROUND & OPERATIONAL FRAMEWORK

Core Objective

The selected vendor shall operate a community-based adult day care program designed to provide a structured, protective environment for eligible adults (e.g., individuals aged 60+ or adults living with cognitive or physical disabilities). The program's goal is to maximize participant autonomy, offer vital social and therapeutic engagement, prevent unnecessary institutionalization, and provide essential respite for primary family caregivers.

Facility Capacity Allocation

The physical facility has an established maximum legal occupancy constraint.

Maximum Permitted Capacity: 30 participants daily.

All operational layouts, physical configurations, dining schedules, and emergency exit routes must be optimized for this maximum capacity threshold.

County-Provided Infrastructure

To facilitate a sustainable local service pipeline, Flagler County provides structural support to the selected vendor:

Low-Cost Lease: The County offers access to the licensed day care space at a heavily reduced, below-market rental rate. Current rental rate is projected to be $500/mo., or $6000/yr, and may be waved for the first year of operations.

Structural Maintenance: The County maintains responsibility for major structural building systems (e.g., roof integrity, exterior walls, landscaping, and central HVAC system replacements). The applicant will be responsible for day-to-day internal upkeep of the facility, cleanliness, decorations, program supplies and the like.

Operational Self-Sufficiency Constraints

No Direct County Funding: No operational subsidies, baseline grants, financial draws, or direct service fee reimbursements will be provided by Flagler County. Referrals from interested and eligible Older Americans Act and State General Revenue grants (ADI, CCE, HCE) will be provided as available and applicable.

Independent Business Unit: The selected applicant must operate purely as a self-sustaining business entity. The operator is solely responsible for generating all revenue via third-party billings, private fees, and alternative grant funding to cover all operational overhead, labor, utilities, and programmatic costs.

REGULATORY TRANSITION & CONTINUITY MINIMUMS

The selected applicant must maintain seamless continuity of care for active program participants and legally assume operational control of the facility license without experiencing service disruptions or temporary closures.

A. AHCA Change of Ownership (CHOW) Requirements

The selected vendor must navigate and execute the license transition through the Florida Agency for Health Care Administration (AHCA) under Chapter 429, Part III, Florida Statutes, and Chapter 59A-16, Florida Administrative Code (F.A.C.):

- Application Timeline: Submit a comprehensive, complete Change of Ownership (CHOW) application via the AHCA Online Licensing System Portal at least 60 days prior to the anticipated operational transfer date.
- Financial Competency Verification: Complete and submit ACHA Form 31-00-0009 (Proof of Financial Ability to Operate). The applicant must verify sufficient liquid assets to cover all projected facility operating expenses (including utilities, vendor accounts, and staff payroll) for the initial 90 days of operation without relying on immediate accounts receivable or collections.
- Legal Transfers: Provide fully executed Asset Purchase Agreements, Bills of Sale, or Lease-Transfer Documents establishing a clear line-of-ownership transfer between the outgoing operator and the applicant.
- Liability & Corrections: Assume immediate operational responsibility for and submit an approved Plan of Correction (PoC) to AHCA for any outstanding compliance citations or deficiencies left by the preceding license holder. No citations or deficiencies exist at the time of this RFP.
- Background Clearances: Ensure all executive officers, program directors, board members, and financial stakeholders holding a 5% or greater interest have passed a Level 2 background screening via the AHCA Care Provider Background Screening Clearinghouse prior to contract signing.

B. Florida Medicaid MLTC Provider Continuity

Because the core target population relies heavily on home and community-based waiver services, the selected provider must satisfy the following Medicaid criteria:

- Active Enrollment: Establish and/or maintain active status on the AHCA Provider Master List (PML) with a valid Florida Medicaid Provider ID.
- SMMC Region B Credentialing: Secure, transfer, or maintain active provider network contracts with the authorized Statewide Medicaid Managed Care (SMMC) 3.0 Long-Term Care (LTC) managed care organizations serving Region B (Flagler County) through the 2030 contract cycle:

- Sunshine Health
- Simply Healthcare
- Humana
- Florida Community Care (FCC)
- UnitedHealthcare Community Plan

- Continuity of Care Mitigation: Detail an explicit risk-mitigation strategy to safely navigate participant billing during the standard regional 90-day "Continuity of Care" window if an existing client shifts from the incumbent operator to their organization while insurance credentials are being finalized.
- HCBS Settings Rule Adherence: Comply with federal Centers for Medicare & Medicaid Services (CMS) Home and Community-Based Services (HCBS) regulations. The program structure must optimize participant autonomy, independence, privacy, and integration into the broader local community.

STAFFING CONFIGURATIONS & MATRICES

The selected vendor must maintain staffing configurations that comply strictly with Rule 59A-16.005, F.A.C. Based on a maximum permitted daily census of 30 clients, the proposal must fulfill the following structured staffing matrix:

SUGGESTED DAILY STAFFING LAYOUT (MAX 30 CAPACITY)	
1. Core Center Director	1 Full-Time Equivalent (FTE)
2. Direct Care Staff (1:6)	5 FTE Awake, Direct-Care Personnel
Specialized Memory (1:5)	1 FTE of 5 if serving Alzheimer's/Dementia
3. Licensed Healthcare (RN/LPN)	1 PRN, but ideally dedicated Shift position

A. General Direct Care Staff Ratio (1:6 Ratio)

- Minimum Metric: A minimum ratio of one (1) staff member who provides direct services for every six (6) participants must be present at the facility at all times.
- Full Capacity Requirement: For a maximum census of 30 clients, the applicant must schedule a minimum of five (5) awake, direct-care personnel on-site daily during operating hours.

B. Specialized Alzheimer’s/Dementia Care Ratio (1:5 Ratio)

- Minimum Metric: For any sub-population of participants diagnosed with Alzheimer's disease or related forms of dementia, the facility must increase staffing to one (1) direct service staff member for every five (5) memory care participants.
- Capacity Impact: If the applicant intends to dedicate a portion of the 30-client slot allotment to specialized dementia care, the staffing layout would adjust upward. Example: An active daily census of 20 general clients (4 staff) and 10 memory-care clients (2 staff) will require 6 direct care staff members.

C. Mandated Core Roles (Non-Delegable)

- Center Director (1 FTE): Responsible for daily administration. The director cannot be dual-counted as primary direct-care staff if the active census regularly exceeds 12 participants.
- Licensed Healthcare Personnel: The applicant must secure a Registered Nurse (RN) or Licensed Practical Nurse (LPN) to manage medication administration, perform health screenings, and coordinate care plans under Florida AHCA rules.

DETAILED SCOPE OF WORK (SOW) OPERATIONS

The selected vendor shall perform all duties, services, and responsibilities detailed below. Proposals shall address all of the following aspects of the scope of work.

A. Core Operating Schedule

- Mandatory Operational Hours: The facility shall remain open to participants from 9:00 AM to 4:30 PM, Monday through Friday, excluding County-designated holidays.
- Service Availability: The vendor must ensure staff are on-site at least 30 minutes prior to opening (8:30 AM) and remain until all participants are safely discharged or boarded onto transit vehicles at the end of the day.

B. Participant Intake, Assessment, and Care Planning

- Eligibility and Intake Screening: Conduct comprehensive pre-admission screenings to ensure applicants meet adult day care criteria. Participants must not require 24-hour continuous bed confinement or pose a physical threat to themselves or others.
- Individualized Plan of Care (POC): Develop a written POC for each participant within 30 days of admission. The POC must be co-signed by the participant’s primary physician or managed care case manager. It must document specific goals, physical limitations, behavioral interventions, and required assistance levels.

- Mandatory Reassessments: Conduct formal reviews and updates of each participant's POC every six (6) months, or immediately following any significant change in the individual's physical or mental health status.

C. Clinical, Health, and Medication Management

- Nursing Oversight: Provide on-site or contracted nursing coverage (RN or LPN) to perform daily health monitoring, including vital sign checks, blood sugar monitoring, and weight tracking as specified by individual care plans.
- Medication Administration: Securely store and administer medications in strict compliance with Rule 59A-16.005(4), F.A.C. All administrations must be executed by licensed medical professionals or properly certified staff under RN oversight.
- Medication Administration Records (MAR): Maintain a flawless, real-time MAR for each participant. Document the drug name, dosage, route, exact time of administration, and the signature of the administering staff member.
- Medical Emergency Response: Establishing and maintaining an active contract with a medical director or regional emergency response system is highly encouraged, at minimum ensuring all staff hold active CPR and First Aid certifications at all times.

D. Activities of Daily Living (ADLs) & Personal Care Assistance

- Direct Care Support: Provide respectful, hands-on assistance with basic Activities of Daily Living (ADLs). This includes ambulation, transfers, eating, grooming, and specialized toileting or incontinence care. Use of restraining techniques (hands on) and/or assistive mechanisms is not sought, but if it is part of an applicant proposal, all aspects of this practice and related regulatory compliance must be adequately addressed in the proposal
- Restorative Care Maintenance: Implement simple, routine range-of-motion exercises, scheduled walking regimens, and hydration tracking to prevent physical decline and maintain participant independence.

E. Therapeutic, Social, and Memory Care Programming

- Daily Structured Activities: Design and execute a minimum of three (3) hours of scheduled therapeutic activities per day. Activities must cater to varying cognitive and physical functional levels, including arts, music, gentle physical fitness, and socialization.
- Specialized Dementia Programming: Provide distinct, physically segregated cognitive stimulation programs for participants diagnosed with Alzheimer's or related dementias. These programs must focus on validation therapy, memory orientation, and wandering mitigation within a secure perimeter.

F. Nutritional and Dietary Services

- Meal Requirements: Provide a minimum of one (1) hot, nutritionally balanced meal and two (2) healthy snacks during the designated operational day. Meals must fulfill at least one-third (1/3) of the Recommended Dietary Allowances (RDA) for adults.
- Therapeutic and Modified Diets: Accommodate medically prescribed modified diets, including mechanical soft, pureed, low-sodium, and diabetic menus.
- Sanitation Standards: Ensure all food storage, preparation, and kitchen operations comply fully with Florida Department of Health (DOH) Chapter 64E-11 guidelines. Keep valid DOH food service permits posted at all times.

G. Facility Operations, Maintenance, and Security

- Utility Financial Responsibility: Pay all facility utility costs—including electricity, water, sewer, internet, and telephone service—directly to providers. Maintain separate utility tracking distinct from corporate overhead.
- Internal Maintenance and Janitorial Services: Provide daily interior janitorial care, deep cleaning, and waste removal. Keep the building clean, odor-free, and fully sanitized. Maintain all internal program-specific equipment (such as lift chairs, medical carts, and kitchen appliances) at the vendor's expense.
- Physical Security: Secure all exterior exit points with delayed-egress magnetic locks or keypad security systems. This ensures a safe environment and prevents elopement of memory-care participants, in full compliance with local fire codes.
- Assume and ensure all regulatory compliance, oversight and respective liability in the day to day operations, licensing, and administration of Adul Day Care, per pertinent state statute and regulations.

H. Safe Transportation Services

- Transit Coordination: Coordinate with Flagler County Transportation, family/caregivers and other appropriate parties to ensure portal-to-portal transportation for participants traveling between their residences in Flagler County and the adult day care center. Coordination with Senior Services Division is also encouraged and available.
- Vehicle Compliance: Ensure all transit vehicles used are ADA-accessible, equipped with functional wheelchair lifts/tie-downs, climate-controlled, and regularly maintained.

I. Emergency Activation & Disaster Assistance Response

- Hurricane and Evacuation Shelter Support: In the event of local hurricane activations, severe weather emergencies, or mandatory county evacuations ordered by Flagler County Emergency Management, the County may request the vendor to assist in emergency shelter operations.

- Feasibility-Based Care Coordination: As feasible and safe given regional conditions, the vendor may be asked to coordinate the safe transfer, tracking, and temporary continuity-of-care support for active adult day care participants placed within designated County medical-needs or public emergency shelters.
- Disaster Plan Submission: The vendor must submit an updated, comprehensive Emergency Preparedness Plan annually to the Flagler County Emergency Management Division for review and local approval.

FINANCIAL REPORTING & ACCOUNTABILITY

Because the County provides the physical infrastructure, the vendor must maintain transparent fiscal practices to prove long-term viability:

- Segregated Accounting Systems: Maintain distinct, auditable financial records specifically for this facility location, applying standard Generally Accepted Accounting Principles (GAAP).
- Annual Audited Financial Statements: Submit an annual financial audit compiled by an independent Certified Public Accountant (CPA) to the County Contract Manager within 120 days of the fiscal year-end.
- Monthly Facility Utility Cost Validation: Provide timely proof of payment for all building utilities, which must be tracked independently from corporate administrative overhead.

6. Proposal Submittal Requirements

6.1. Provider's Qualifications and Experience

Provider’s qualifications, experience and past Provider performance related to providing the type of services requested in this solicitation.

The Provider will be required to demonstrate a comprehensive set of qualifications to ensure they are capable of delivering high-quality Adult Day Care Program.

The Contractor must have a minimum of 5 years’ experience in providing services to individuals diagnosed, showcasing a strong background in therapeutic care and health supervision.
Specifically, the Provider must provide evidence of a well-established track record in operating adult day care programs or similar services.

This includes a history of successfully designing and managing therapeutic programs that address the cognitive, physical, and emotional needs of individuals.

The Provider must also demonstrate expertise in developing individualized care plans that cater to the unique needs of each participant, ensuring that all activities are tailored to enhance their quality of life and well-being.

Provider must show evidence of its organizational capacity to manage the program effectively, including a clear administrative structure and support system to ensure smooth operations.

The Provider should also provide proof of their ability to manage legal and financial responsibilities, particularly in terms of making site improvements to meet required codes for health, safety, and accessibility.

The applicant will also need to demonstrate strong communication skills, including the ability to collaborate effectively with the City, caregivers, family members, and community partners.

The Provider must be committed to providing regular updates on program progress, participant outcomes, and any challenges encountered, ensuring transparency and accountability throughout the project.

6.2. Organizational Profile and Project Team Qualifications

Provider's approach to providing the requested scope of services.

Provider must provide a qualified team of professionals with relevant certifications, such as Registered Nurses (RNs), Licensed Practical Nurses (LPNs), or Certified Nursing Assistants (CNAs), and staff members trained in Alzheimer’s disease or related dementia care. These professionals should have experience in supervising participants, administering medication, assisting with activities of daily living, and addressing the medical and behavioral needs of individuals with Alzheimer’s disease or related dementia.

The operational staff provided by the applicant will play a critical role in ensuring the effective and safe operation of the Adult Day Care Program at the David I. Siegel Center. The staff must be qualified and capable

of delivering high-quality care to individuals, as well as providing support to their caregivers. The staff will consist of a variety of professionals, including an administrator, nursing staff, direct care workers, and support staff, each of whom must meet specific educational and licensing requirements to comply with state and local regulations.

The following areas must be addressed:
1. Identify the staff involved in the project, including identification of the bidder's project manager. The specific individuals who will work on this project must be identified, along with the nature and extent of their involvement.
2. Summarize their qualifications related to specific requirements of this project.
3. Resumes of professional staff must be included. 4. Job descriptions for all project staff must be included. Descriptions must include the hours the staff person works each week and the number of hours assigned to this program each week.
5. A Program Organizational Chart must be included. If you operate more than one program, also include an Agency Organizational Chart showing the line of authority.
6. The specific individuals who will work on this project must be identified, along with the nature and extent of their involvement. The qualifications of these individuals shall be presented (in resumes or other formats).

If conducting this project will require hiring of one or more individuals who are not currently employed by the bidding organization, applications shall provide detailed job descriptions, including required qualifications and experience.

If subcontractors are to be used, the proposal shall also contain similar information regarding each subcontractor

6.3. Approach and Methodology

Professional experience and qualifications of key personnel that will be assigned to this project.

The Provider must provide a comprehensive description of their organization's expertise in the area of adult day care services.
This includes detailed information on the organization's experience in operating similar projects, demonstrating a proven track record in designing and implementing therapeutic care programs that address the unique needs of individuals to include individuals with Alzheimer's disease or related dementia.

The Provider must outline their capacity to provide high-quality, person-centered care in a structured, supportive environment that promotes cognitive, emotional, and physical well-being. A key requirement is the inclusion of a summary of similar current and completed projects, to include any projects that focus on dementia or Alzheimer's care. The Provider should highlight any ongoing or past adult day care programs, therapeutic services for individuals with cognitive impairments, or similar health and wellness programs aimed at improving quality of life for elderly or vulnerable populations.

For each project, the applicant should provide the following: project name, client or organization served, scope of services, the number of participants, and any measurable outcomes or successes achieved. This will

help demonstrate the organization's ability to effectively manage and deliver services on a similar scale and complexity to the Adult Day Care Program at David I. Siegel Center.

The Provider should also provide evidence of its capacity to manage both the operational and regulatory requirements of such programs, including compliance with state and local adult day care regulations. Examples of successful projects, particularly those that involved improvements to facilities, adherence to health and safety standards, or the integration of community-based care strategies, will strengthen the Provider's qualifications.

The Provider should also demonstrate their ability to handle the financial and administrative aspects of the program, ensuring sustainability and efficient management. The organization's experience in overseeing program staffing, including qualified professionals trained in dementia care, as well as their approach to caregiver support, will be important factors in evaluating their qualifications. The County seeks a Provider that can leverage this experience to create a program that meets both the immediate and long-term needs of participants, while collaborating effectively with County staff, caregivers, and other community stakeholders. Past performance references, along with detailed descriptions of similar projects, will be critical in assessing the Provider's qualifications and suitability for this important role.

6.4. Past Performances and References

Provide at least three references, preferably from government entities, for projects with similar scope of services.

Applicants must provide evidence of their past performance and include references to demonstrate their ability to successfully deliver high-quality adult day care services, to include services for individuals with dementia or Alzheimer's disease. Submissions should highlight the applicant's demonstrated success in managing similar programs, including specific examples of services provided, populations served, and outcomes achieved.

Applicants should provide data or testimonials that showcase their expertise in developing and implementing therapeutic activities, managing health supervision, and supporting participants with progressive cognitive impairments. Emphasis should be placed on their ability to deliver person-centered care and achieve positive impacts on both participants and their caregivers.

To support their track record, Applicants must include references from previous clients who can speak to the Provider's quality of service, professionalism, and overall performance. References should include contact information, a description of the services provided, and details about the scope of the project. These references will play a critical role in validating the applicant's capability to fulfill the requirements of the Adult Day Care Program.

Applicants are also encouraged to provide evidence of positive feedback from participants, caregivers, and stakeholders from prior projects. This could include client satisfaction surveys, letters of recommendation, or case studies illustrating successful outcomes.

Additionally, any relevant certifications, awards, or recognition for excellence in adult day care services or dementia care should be highlighted to further establish credibility and expertise. Evidence of strong past performance and satisfied clients will be essential in evaluating the applicant's suitability for this program.

Given the regulatory requirements that directly impact both the construction and operation of an Adult Day Care facility, applicants are strongly encouraged to demonstrate knowledge of, and experience with, Florida's Agency for Health Care Administration (AHCA) regulations. In Florida, Adult Day Care Centers must obtain both a license and a certificate of sanitation prior to beginning operations. Accordingly, applicants should provide evidence of past compliance with AHCA standards, including licensure experience and familiarity with applicable facility and programmatic requirements.

6.5. Financial Stability

Providers must demonstrate financial stability and the capacity to manage all operational and site improvement costs associated with the scope of services.

Applicants must provide clear and compelling evidence of financial stability to demonstrate their ability to successfully develop, implement, and sustain the Adult Day Care Program at the David I. Siegel Center.

Submissions should include detailed financial documentation that illustrates the applicant's capacity to manage operational expenses, fund necessary site improvements, and meet all regulatory and licensing requirements without financial constraints.

Applicants are required to submit audited financial statements for the past three years, including balance sheets, income statements, and cash flow statements, to provide a comprehensive view of their financial health. If audited statements are unavailable, independently reviewed or compiled statements may be submitted, accompanied by an explanation of their validity.

Applicants should provide a summary of their current financial position, highlighting key metrics such as liquidity, solvency, and debt-to-equity ratio. Evidence of access to sufficient working capital or credit lines to cover project costs, including unforeseen expenses or delays, must also be included. Applicants are encouraged to submit letters of credit or other guarantees from financial institutions as further evidence of their ability to finance the project.

The submission should outline the applicant's financial management practices, such as budgeting, cost controls, and risk mitigation strategies, to demonstrate their ability to effectively allocate resources and maintain fiscal responsibility. If applicable, applicants should include a record of successfully managing similar projects, with examples of how they ensured financial sustainability.

Applicants must also provide details on their ability to meet the long-term financial demands of operating the program including staff salaries, facility maintenance, and program resources. Submissions should reflect the applicant's understanding of the financial commitments required to maintain compliance with state and local regulations and to deliver high-quality services to participants. Evidence of financial stability will be a critical evaluation criterion, as it ensures the selected Provider can uphold its contractual obligations and deliver a sustainable and impactful program for Flagler County.

6.6. Cost

1. Participant Rate Structure

Propose the daily unit rates to be charged to participants or third-party insurers.

Service Category	Unit Measure	Proposed Base Rate
General Adult Day Care	Per Participant, Per Day	
Specialized Memory Care (Dementia)	Per Participant, Per Day	

2. Pro Forma Break-Even Matrix

Confirm the operational milestones necessary to reach self-sufficiency within the facility space.

- Minimum average daily census required to break even:_____ participants per day.
- Projected timeline to hit break-even census from contract start date: _____calendar days.

This scoring is to be done by Admin at time of evaluation scoring meeting.

7. Evaluation Phases

Each Proposal submittal shall be evaluated for conformance as responsive and responsible using the following criteria:

1. That all proposal documentation was submitted timely and in conformance with all requirements of the RFP.

2. That the following elements of Contractor's proposal meet or exceed the requirements of this RFP and cumulatively provide the service and benefits to the County deemed to be in the best interest of the public

3. Scoring (0-5) shall be assigned as follows. Each criteria will have a weight assigned to calculate total points awarded.

- 0= Did not submit
- 1 = Poor - Proposal is lacking or inadequate in most basic requirements, specifications, or provisions for the specific criteria.
- 2 = Below Average - Proposal meets many of the basic requirements, specifications or provisions of the specific item, but is lacking in some essential aspects for the specific criteria.
- 3 = Average - Proposal adequately meets the minimum requirements, specifications, or provisions of the specific item, and is generally capable of meeting the County's needs for the specific criteria.
- 4 = Above Average - Proposal more than adequately meets the minimum requirements, specifications, or provisions of the specific criteria, and exceeds those requirements in some aspects for the specific criteria.
- 5 = Excellent - Proposal exceeds minimum requirements, specifications, provisions in most aspects for the specific criteria.

4. Pricing elements shall be scored with lowest price/highest revenue receiving 5 points and calculating down from there based on percentage.

No.	Evaluation Criteria	Scoring Method	Weight (Points)

1.	**Provider's Qualifications and Experience** Provider's qualifications, experience and past Provider performance related to providing the type of services requested in this solicitation. The Provider will be required to demonstrate a comprehensive set of qualifications to ensure they are capable of delivering high-quality Adult Day Care Program. The Contractor must have a minimum of 5 years' experience in providing services to individuals diagnosed, showcasing a strong background in therapeutic care and health supervision. Specifically, the Provider must provide evidence of a well-established track record in operating adult day care programs or similar services. This includes a history of successfully designing and managing therapeutic programs that address the cognitive, physical, and emotional needs of individuals. The Provider must also demonstrate expertise in developing individualized care plans that cater to the unique needs of each participant, ensuring that all activities are tailored to enhance their quality of life and well-being. Provider must show evidence of its organizational capacity to manage the program effectively, including a clear administrative structure and support system to ensure smooth operations. The Provider should also provide proof of their ability to manage legal and financial responsibilities, particularly in terms of making site improvements to meet required codes for health, safety, and accessibility. The applicant will also need to demonstrate strong communication skills, including the ability to collaborate effectively with the City, caregivers, family members, and community partners. The Provider must be committed to providing regular updates on program progress, participant outcomes, and any challenges encountered, ensuring transparency and accountability throughout the project.	0-5 Points	20 *(20% of Total)*

2.	**Organizational Profile and Project Team Qualifications** Provider's approach to providing the requested scope of services. Provider must provide a qualified team of professionals with relevant certifications, such as Registered Nurses (RNs), Licensed Practical Nurses (LPNs), or Certified Nursing Assistants (CNAs), and staff members trained in Alzheimer's disease or related dementia care. These professionals should have experience in supervising participants, administering medication, assisting with activities of daily living, and addressing the medical and behavioral needs of individuals with Alzheimer's disease or related dementia. The operational staff provided by the applicant will play a critical role in ensuring the effective and safe operation of the Adult Day Care Program at the David I. Siegel Center. The staff must be qualified and capable of delivering high-quality care to individuals, as well as providing support to their caregivers. The staff will consist of a variety of professionals, including an administrator, nursing staff, direct care workers, and support staff, each of whom must meet specific educational and licensing requirements to comply with state and local regulations. The following areas must be addressed: 1. Identify the staff involved in the project, including identification of the bidder's project manager. The specific individuals who will work on this project must be identified, along with the nature and extent of their involvement. 2. Summarize their qualifications related to specific requirements of this project. 3. Resumes of professional staff must be included. 4. Job descriptions for all project staff must be included. Descriptions must include the hours the staff person works each week and the number of hours assigned to this program each week. 5. A Program Organizational Chart must be included. If you operate more than one program, also include an Agency Organizational Chart showing the line of authority. 6. The specific individuals who will work on this project must be identified, along with the nature and extent of their involvement. The qualifications of these individuals shall be presented (in resumes or other formats). If conducting this project will require hiring of one or more individuals who are not currently employed by the bidding	0-5 Points	20 *(20% of Total)*

	organization, applications shall provide detailed job descriptions, including required qualifications and experience. If subcontractors are to be used, the proposal shall also contain similar information regarding each subcontractor.		

3.	**Approach and Methodology** Professional experience and qualifications of key personnel that will be assigned to this project. The Provider must provide a comprehensive description of their organization's expertise in the area of adult day care services. This includes detailed information on the organization's experience in operating similar projects, demonstrating a proven track record in designing and implementing therapeutic care programs that address the unique needs of individuals to include individuals with Alzheimer's disease or related dementia. The Provider must outline their capacity to provide high-quality, person-centered care in a structured, supportive environment that promotes cognitive, emotional, and physical well-being. A key requirement is the inclusion of a summary of similar current and completed projects, to include any projects that focus on dementia or Alzheimer's care. The Provider should highlight any ongoing or past adult day care programs, therapeutic services for individuals with cognitive impairments, or similar health and wellness programs aimed at improving quality of life for elderly or vulnerable populations. For each project, the applicant should provide the following: project name, client or organization served, scope of services, the number of participants, and any measurable outcomes or successes achieved. This will help demonstrate the organization's ability to effectively manage and deliver services on a similar scale and complexity to the Adult Day Care Program at David I. Siegel Center. The Provider should also provide evidence of its capacity to manage both the operational and regulatory requirements of such programs, including compliance with state and local adult day care regulations. Examples of successful projects, particularly those that involved improvements to facilities, adherence to health and safety standards, or the integration of community-based care strategies, will strengthen the Provider's qualifications. The Provider should also demonstrate their ability to handle the financial and administrative aspects of the program, ensuring sustainability and efficient management. The organization's experience in overseeing program staffing, including qualified professionals trained in dementia care, as well as their approach to	0-5 Points	20 *(20% of Total)*

	caregiver support, will be important factors in evaluating their qualifications. The County seeks a Provider that can leverage this experience to create a program that meets both the immediate and long-term needs of participants, while collaborating effectively with County staff, caregivers, and other community stakeholders. Past performance references, along with detailed descriptions of similar projects, will be critical in assessing the Provider's qualifications and suitability for this important role.		

4.	**Past Performances and References** Provide at least three references, preferably from government entities, for projects with similar scope of services. Applicants must provide evidence of their past performance and include references to demonstrate their ability to successfully deliver high-quality adult day care services, to include services for individuals with dementia or Alzheimer's disease. Submissions should highlight the applicant's demonstrated success in managing similar programs, including specific examples of services provided, populations served, and outcomes achieved. Applicants should provide data or testimonials that showcase their expertise in developing and implementing therapeutic activities, managing health supervision, and supporting participants with progressive cognitive impairments. Emphasis should be placed on their ability to deliver person-centered care and achieve positive impacts on both participants and their caregivers. To support their track record, Applicants must include references from previous clients who can speak to the Provider's quality of service, professionalism, and overall performance. References should include contact information, a description of the services provided, and details about the scope of the project. These references will play a critical role in validating the applicant's capability to fulfill the requirements of the Adult Day Care Program. Applicants are also encouraged to provide evidence of positive feedback from participants, caregivers, and stakeholders from prior projects. This could include client satisfaction surveys, letters of recommendation, or case studies illustrating successful outcomes. Additionally, any relevant certifications, awards, or recognition for excellence in adult day care services or dementia care should be highlighted to further establish credibility and expertise. Evidence of strong past performance and satisfied clients will be essential in evaluating the applicant's suitability for this program. Given the regulatory requirements that directly impact both the construction and operation of an Adult Day Care facility, applicants are strongly encouraged to demonstrate knowledge of, and experience with, Florida's Agency for Health Care Administration (AHCA) regulations. In Florida, Adult Day Care Centers must obtain both a license and a certificate of sanitation prior to beginning	0-5 Points	10 *(10% of Total)*

	operations. Accordingly, applicants should provide evidence of past compliance with AHCA standards, including licensure experience and familiarity with applicable facility and programmatic requirements.		

5.	**Financial Stability** Providers must demonstrate financial stability and the capacity to manage all operational and site improvement costs associated with the scope of services. Applicants must provide clear and compelling evidence of financial stability to demonstrate their ability to successfully develop, implement, and sustain the Adult Day Care Program at the David I. Siegel Center. Submissions should include detailed financial documentation that illustrates the applicant's capacity to manage operational expenses, fund necessary site improvements, and meet all regulatory and licensing requirements without financial constraints. Applicants are required to submit audited financial statements for the past three years, including balance sheets, income statements, and cash flow statements, to provide a comprehensive view of their financial health. If audited statements are unavailable, independently reviewed or compiled statements may be submitted, accompanied by an explanation of their validity. Applicants should provide a summary of their current financial position, highlighting key metrics such as liquidity, solvency, and debt-to-equity ratio. Evidence of access to sufficient working capital or credit lines to cover project costs, including unforeseen expenses or delays, must also be included. Applicants are encouraged to submit letters of credit or other guarantees from financial institutions as further evidence of their ability to finance the project. The submission should outline the applicant's financial management practices, such as budgeting, cost controls, and risk mitigation strategies, to demonstrate their ability to effectively allocate resources and maintain fiscal responsibility. If applicable, applicants should include a record of successfully managing similar projects, with examples of how they ensured financial sustainability. Applicants must also provide details on their ability to meet the long-term financial demands of operating the program including staff salaries, facility maintenance, and program resources. Submissions should reflect the applicant's understanding of the financial commitments required to maintain compliance with state and local regulations and to deliver high-quality services to participants. Evidence of financial stability will be a critical evaluation criterion, as	0-5 Points	20 *(20% of Total)*

<table>
<tr><td></td><td>it ensures the selected Provider can uphold its contractual obligations and deliver a sustainable and impactful program for Flagler County.</td><td></td><td></td></tr>
<tr><td>6.</td><td>Cost

1. Participant Rate Structure

Propose the daily unit rates to be charged to participants or third-party insurers.

<table><tr><th>Service Category</th><th>Unit Measure</th><th>Proposed Base Rate</th></tr><tr><td>General Adult Day Care</td><td>Per Participant, Per Day</td><td></td></tr><tr><td>Specialized Memory Care (Dementia)</td><td>Per Participant, Per Day</td><td></td></tr></table>
2. Pro Forma Break-Even Matrix

Confirm the operational milestones necessary to reach self-sufficiency within the facility space.

• Minimum average daily census required to break even:_____ participants per day.
• Projected timeline to hit break-even census from contract start date: _____calendar days.

This scoring is to be done by Admin at time of evaluation scoring meeting.</td><td>0-5 Points</td><td>10
(10% of Total)</td></tr>
</table>

8. Vendor Questionnaire

1. Acknowledgements

*1.1. Acknowledgment**

By checking yes, the Respondent acknowledges the following:

- Information provided in the response is true and correct and that the submission of a response is final.
- The Respondent agrees to all terms and conditions contained in this solicitation and related exhibits.
- Respondent further agrees and acknowledges that no proprietary or confidential information has been submitted. By submitting this proposal or entering into this contract, Contractor/Respondent acknowledges that all documents submitted are public records and agrees that any records maintained, generated, received, or kept in connection with, or related to the performance of services or delivery of products provided under this proposal or contract are public records subject to the public records disclosure requirements of Florida Statutes sec. 119 et seq., and Article I, section 24 of the Florida Constitution.
- Responses may be withdrawn by the Respondent prior to the closing/offer date. Following the closing date, Respondent understands that a response may not be withdrawn.

☐ Yes
☐ No

*Response required

*1.2. Scope of Services Acknowledgement**

By checking yes, vendor acknowledges the above and/or included Scope of Services and will furnish said product and/or services according to the specifications or scope of services detailed within this Solicitation if awarded.

☐ Yes
☐ No

*Response required

*1.3. By checking yes, the vendor agrees to comply with the E-Verify requirements as described in this section.**

Compliance with E-Verify Federal Requirements

The Contractor shall utilize the U.S. Department of Homeland Security's E-Verify system to verify the employment eligibility of all new employees hired by the Contractor / Consultant on or after the effective date of this Agreement and thereafter during the remaining term of the Agreement, including Subcontractors. Any subcontract entered into by Contractor with any Subcontractor performing work under this contract shall

include the following language: “The Subcontractor shall utilize the U.S. Department of Homeland Security’s E-Verify system to verify the employment eligibility of all new employees hired by the Contractor on or after the effective date of this Agreement and thereafter during the remaining term of the Agreement.” The Contractor covenants and agrees that if it is found in violation of this section or the Executive Order, such violation shall be a material breach of this Agreement and Contractor shall indemnify, defend and hold harmless the County from any fines or penalties levied by a government agency, including the loss or repayment of grant funds by the County.

☐ Yes
☐ No

*Response required

*1.4. Registration on Sam.gov**

For any federally funded project, respondent agrees to register on SAM.gov if awarded a contract under this solicitation.

☐ Yes
☐ No

*Response required

When equals "Yes"

*1.4.1. Please provide your UEI#**

*Response required

*1.5. Registration on Sunbiz.org**

☐ Yes
☐ No

*Response required

When equals "Yes"

*1.5.1. Please provide your Sunbiz.org Document Number**

*Response required

When equals "Yes"

*1.5.2. Please upload your Sunbiz.org certificate.**

*Response required

*1.6. Insurance Acknowledgement**

By checking yes, Respondent agrees to the insurance requirements as detailed in the Required Types and Limits of Insurance Chart and the Required Types of Insurance; Insurance Requirements; and Proof of Insurance sub-sections in "General Terms and Conditions".

☐ Yes
☐ No

*Response required

*1.7. Drug-Free Workplace**

Please download the below documents, complete, and upload.

- DRUG_FREE_WORKPLACE.pdf

*Response required

*1.8. Name and Title of Authorized Agent of the Respondent**

Respondent acknowledges that the name and title of the signatory (the "Authorized Signatory"), as completed below, is authorized to execute contracts/agreements with Flagler County, and any affixed electronic or conformed signature of the Authorized Signatory shall be the act of and attributable to the Authorized Signatory. By signing this Agreement electronically, the Authorized Signatory does thereby adopt the electronic or conformed signature as his or her own and designates a copy of same for use as an official record by Flagler County.

If the below-named individual is not an authorized agent of the firm, as listed with the Florida Division of Corporations (Sunbiz), a Memorandum of Authority shall be uploaded giving that individual authorization to commit the firm to a contract.

Please provide the Complete Name and Title which shall indicate acknowledgment.

*Response required

*1.9. Conflict of Interest**

The award of this Solicitation is subject to Chapter 112, Florida Statutes. All respondents must disclose with their response the name of any officer, director, or agent who is also an employee of Flagler County. Further, all respondents must disclose the name of any Flagler County employee who owns, directly or indirectly, an interest of the Respondent's/Supplier's firm or any of its subsidiaries associated with this project. I certify that this proposal is made without prior understanding, agreement or connection with any corporation, firm or person submitting a proposal for the same services, and is in all respects fair and without collusion or fraud.

Respondent shall select 'No' if a conflict of interest as defined in this question does NOT exist. Please select 'Yes' if a conflict of interest as defined in this question DOES exist and shall be further described in the explanation below.

☐ Yes
☐ No

*Response required

When equals "Yes"

*1.9.1. Enter explanation of the conflict of interest as indicated above. **

*Response required

*1.10. Do you or any owner(s), principal(s), or officer(s) of your firm currently serve on any Flagler County board(s) or committee(s)?**

Please indicate response.

☐ Yes
☐ No

*Response required

When equals "Yes"

*1.10.1. If you indicated YES to Flagler County board/committee question above...**

Please list the individual's full name(s) and the board(s) and/or committee(s) on which they serve.

*Response required

2. Revisions, Addenda, Questions & Answers

All answers to questions of substance will be publicly published using the Question & Answer feature.

Participants are required to review all revisions and answers to questions published. Revisions within the Solicitation as well as responses posted through the 'Question & Answer' feature are authoritative and shall be considered an addendum to the Solicitation. All information in this Solicitation, including information provided through the 'Question & Answer' feature are incorporated into the Solicitation or any Contract resulting from this Solicitation.

*2.1. Addenda/Questions Acknowledgement**

By selecting YES below, participants are confirming that they have reviewed revisions and all answers to questions published and any addenda up until the Solicitation closing date and have given consideration to all information in preparing the response to this Solicitation. Selecting YES will serve as confirmation of acknowledgement.

☐ Yes
☐ No

*Response required

3. Public Entity Crime

*3.1. Public Entity Crime Acknowledgement**

Public Entity Crimes - Pursuant to Section 287.133(12)(a) of the Florida Statutes, a person or affiliate who has been placed on the convicted vendor list following a conviction for a public entity crime may not submit a Submittal Package (Bid Response) on a contract to provide any goods or services to a public entity, may not

submit a bond on a contract with a public entity for the construction or repair of a public building or public work, may not submit Submittal Package (Bid Response) on leases of real property to a public entity may not be awarded or perform work as a contractor, supplier, subcontractor, or consultant under a contract with any public entity, and may not transact business with any public entity in excess of the threshold amount provided in Section 287.017 for Category Two ($25,000) for a period of 36 months from the date of being placed on the convicted vendor list. Respondent should read carefully all provisions of 287.133 and 287.134, Florida Statutes (2005).

By selecting 'Yes', the Respondent represents and warrants that the submission of its response/proposal does not violate Section 287.133, Florida Statutes (2005), nor Section 287.134, Florida Statutes (2005) or their successor. In addition to the foregoing, the Respondent represents and warrants that Respondent, Respondent's subcontractors and Respondent's implementer, if any, is not under investigation for violation of such statutes.

☐ Yes
☐ No

*Response required

4. Certification Regarding Debarment, Suspension, Ineligibility and Voluntary Exclusion

*4.1. Acknowledgment Regarding Debarment, Suspension, Ineligibility and Voluntary Exclusion**

By selecting 'Yes' below, the Respondent certifies to the best of its knowledge and belief, that the firm and any subcontractor/supplier in accordance with a response to this solicitation:

- are not presently debarred, suspended, proposed for debarment, declared ineligible, or voluntarily excluded from covered transactions by any Federal department or agency
- have not within a three-year period preceding this bid proposal been convicted of or had a civil judgment rendered against them for commission of fraud or a criminal offense in connection with obtaining, attempting to obtain, or performing a public (Federal, State, or local) transaction or contract under a public transaction; violation of Federal or State antitrust statutes or commission of embezzlement, theft, forgery, bribery, falsification or destruction of records, making false statements, or receiving stolen property.
- are not presently indicted for or otherwise criminally or civilly charged by a government entity (Federal, State, or local) with commission of any of the offenses enumerated in the previous paragraph of this certification.
- have not within a three (3) year period preceding this bid proposal had one or more public transactions (Federal, State, or local) terminated for cause or default.

☐ Yes
☐ No

*Response required

When equals "No"

4.1.1. Enter explanation of the 'No' response to the Certification Regarding Debarment, Suspension, Ineligibility and Voluntary Exclusion.

5. Scrutinized Companies Certification

Per State of Florida Statute s. 287.135(5) Suppliers (companies) must acknowledge and agree to the 'Certification Regarding Prohibition Against Contracting with Scrutinized Companies' paragraph listed below. Respondents shall agree by marking the option below. Respondents neglecting to respond may be disqualified from consideration of award and deemed non-responsive.

I hereby certify that neither the responding entity, nor any of its wholly owned subsidiaries, majority-owned subsidiaries, parent companies, or affiliates of such entities or business associations, that exists for the purpose of making profit have been placed on the Scrutinized Companies That Boycott Israel List created pursuant to s. 215.4725 of the Florida Statutes, or are engaged in a boycott of Israel.

In addition, if this Solicitation is for a contract for goods or services where the total contract value is one million dollars ($1,000,000) or more, I hereby certify that neither the responding entity, nor any of its wholly owned subsidiaries, majority- owned subsidiaries, parent companies, or affiliates of such entities or business associations, that exists for the purpose of making profit are on the Scrutinized Companies with Activities in Sudan List or the Scrutinized Companies with Activities in the Iran Petroleum Energy Sector List, created pursuant to s. 215.473 of the Florida Statutes, or are engaged in business operations in Cuba or Syria as defined in said statute.

I understand and agree that the County may immediately terminate any contract resulting from this Solicitation upon written notice if the responding entity (or any of those related entities of respondent as defined above by Florida law) are found to have submitted a false certification or any of the following occur with respect to the company or a related entity: (i) it has been placed on the Scrutinized Companies that Boycott Israel List, or is engaged in a boycott of Israel, or (ii) for any contract for goods or services of one million dollars ($1,000,000) or more, it has been placed on the Scrutinized Companies with Activities in Sudan List or the Scrutinized Companies with Activities in the Iran Petroleum Energy Sector List, or it is found to have been engaged in business operations in Cuba or Syria.

*5.1. By selecting 'Yes', the respondent acknowledges and agrees to the 'Certification Regarding Prohibition Against Contracting with Scrutinized Companies.' **

☐ Yes

☐ No

*Response required

6. Forms/Documentation

*6.1. Proposal Form**

Please download the attached form, complete, and upload the completed form.

- Proposal_Form_11.18.24.pdf

*Response required

6.2. Memorandum of Authority

If the Authorized Signatory identified in Section 1.11 above is not an authorized agent of the firm, as listed with the Florida Division of Corporations (Sunbiz), a memorandum of authority, signed by an authorized agent, shall be uploaded in this section giving that individual (Authorized Signatory) the authority to commit the firm to a contract.

*6.3. W-9 **

Please attach current W-9 Form

*Response required

*6.4. Proof of Insurance **

Please provide Proof of Insurance - evidence of required insurance coverage or proof of insurability in the amounts indicated. If available, a properly completed ACORD Form is preferable. Upon award, final forms must contain the correct solicitation and/or project number and Flagler County contact person.

Firms that have owner/operators that have filed a "Notice of Election to be Exempt" shall submit a copy with the response

*Response required

6.5. Hold Harmless Agreement

Please download the below document, complete, and upload.

Only upload if applicable in accordance with Florida Law.

- Flagler_Hold_Harmless_Agree...

*6.6. Professional Certification/Licenses**

Respondent and their Subconsultants/Subcontractors shall have a current professional license from the appropriate governing board to practice in the State of Florida at the time of its submittal. Respondent and their Subconsultants/Subcontractors shall submit with their submittal, copies of their professional license.

Licenses shall remain current for the entire term of the Contract resulting from this solicitation.

*Response required

*6.7. Prohibition Against Contingent Fees**

Respondent shall properly complete, notarize and upload the attached disclosure statement certifying that he or she has not employed or retained any company or person, other than a bona fide employee working solely for the respondent to solicit or secure this contract and that he or she has not paid or agreed to pay any person, company, corporation, individual, or firm, other than a bona fide employee working solely for the respondent any fee, commission, percentage, gift, or other consideration contingent upon or resulting from award or making of this contract.

- Prohibition_Against_Contige...

*Response required

*6.8. Human Trafficking Attestation Pursuant to Section 787.06, Florida Statutes**

A duly authorized officer or representative of the Respondent (non-governmental entity) shall complete the included Flagler Human Trafficking Attestation Form in compliance with Section 787.06(13), Florida Statutes, (2024).

Download the attached form, complete, and upload completed form.

- Flagler_Human_Trafficking_A...

*Response required

*6.9. Financial Statement **

All Respondents shall be prepared to supply a financial statement upon request, preferably a certified audit of the last available fiscal year.

☐ Please confirm

*Response required

7. Proposal Information

Proposals shall be clear, concise, indexed by subject and properly submitted per the requirements. Documents shall be uploaded by the Respondent to the appropriate section.

Failure to provide the required information may result in the proposal not being considered.

*7.1. Documentation Submittal**

Only provide documentation for the required item being asked under each section. Posting the whole proposal under each requirement will have you marked as non responsive and your bid will not be considered.

☐ Yes
☐ No

*Response required

*7.2. Submittal Letter / Firm Profile **

Submittal Letter signed by an authorized agent of the firm.

A brief profile of the firm, including:

A. A brief history of the business;

B. Organizational structure of business;

C. Designation of the legal entity by which the business operates (i.e., sole proprietorship, partnership, limited liability partnership, corporation, limited liability corporation, etc.) including documentation from the appropriate state's agency confirming firm's legal entity type. For non-Florida businesses, submit documentation from the state in which the business was formed and documentation from the State of Florida providing authorization to perform business in the state of Florida;

D. A Florida Department of State, Division of Corporations' Sunbiz report available at www.sunbiz.org; If firm is not currently registered to do business within the State of Florida (Sunbiz), proof of registration shall be submitted prior to award.

E. Ownership interests;

F. Active business venues (counties, states, etc.);

G. Present status and projected direction of business;

H. The overall qualifications of the business to provide the services requested;

I. The qualifications of the firm's employees who will work on the Contract;

J. Respondent shall also list any lawsuits in which their team (firm & sub consultants) has been involved in relative to company contracts or other company business over the last five (5) years. The respondent shall also list any work their team failed to complete in accordance with any contract in the last five (5) years and describe details regarding the non-performance, including listing any officer or partner of their team who in the last five (5) years failed to complete a contract handled in his/her name.

*Response required

*7.3. Firm/Employee Qualifications **

Qualifications of the firm and the employees that will be assigned to the County.

Key personnel inclusive of resumes, licenses, business venues, etc.

*Response required

*7.4. Similar Projects and References **

The information provided in this section, must be current and the County must be able to contact references for verification as part of the evaluation process.

Unless specifically asked by the County, Flagler County shall not be listed as a reference. The respondent shall provide examples of similar projects which best illustrates the Respondent's qualification for the scope of services.

The Respondent shall provide examples of similar projects which best illustrates the proposed team's qualification for the scope of services. Respondent shall state the project title; location; owner name, address, and telephone number; years completed; project cost; brief description of project and relevance to this RSQ.

Provide a client reference for each of the representative projects including project name, client name, address, contact name and phone number and E-mail address. It is the firm's responsibility to ensure E-mail addresses provided are current and accurate. Use the attached Reference Form.

Please download the below document, complete, and upload.

- References_Form_11.18.24.pdf

*Response required

*7.5. Project Approach**

Overall project methodology/approach to support the needs and objectives of the project; including method for quality control.

*Response required

*7.6. Price Proposal Form**

Please download the below documents, complete, and upload.

- PRICE_PROPOSAL_FORM.pdf

*Response required

*7.7. ACHA Form 31-00-0009**

Please download the below documents, complete, and upload.

- ACHA_Form_31-00-0009.xls

*Response required

9. Definitions

As used in this Solicitation, the following terms shall have the meanings set forth below:

- **Construction Services**: Means all labor, services, and materials provided in connection with the construction, alteration, repair, demolition, reconstruction, or any other improvements to real property. The term "construction services" does not include Contracts or work performed for the Department of Transportation.
- **Consultant**: The person with education and/or experience which uniquely qualifies him or her to perform a specialized service for the County.
- **Consultant's Services**: Those services within the scope of work of this solicitation that are in an advisory nature to support policy development, decision-making, administration, or management of the government; normally provided by persons and/or organizations considered to have prerequisite knowledge or special abilities not generally available in the government.
- **Contract**: The document resulting from this solicitation between the County and the awarded Respondent, including this RFP, and the awarded Respondent's response along with any written addenda and other written documents, which are expressly incorporated by reference.
- **Contractor**: That person or entity, including employees, servants, partners, principals, agents and assignees of the person or entity that has submitted a Bid or proposal for the purpose of obtaining business with the County to provide the product and/or services set forth herein.
- **Contract Administrator**: The Procurement and Contract Services Manager or designee shall serve as Contract Administrator. The Contract Administrator shall be responsible for addressing any concerns within the scope of the Contract. Any changes to the resulting Contract shall be done in writing and authorized by the Procurement and Contract Services Manager.
- **County**: Shall mean the Flagler County Board of County Commissioners (a body corporate and politic and a subdivision of the State of Florida).
- **County's Project Manager(s)**: The Project Manager(s) have responsibility for the day-to-day administration of the resulting Agreement for the County and will be designated prior to award of the resulting Master Agreement or Purchase Order.
- **Day**: The word "day" means each calendar day or accumulation of calendar days.
- **Director**: The Procurement and Contract Services Manager for Flagler County Board of County Commissioners, Florida.

- **Person or Persons**: An individual, firm, partnership, corporation, association, executor, administrator, trustee, or other legal entity, whether singular or plural, masculine or feminine, as the context may require.
- **Proposal**: The document submitted by the Consultant in response to a formal solicitation used to determine if the Consultant is highly qualified.
- **Proposer**: See Respondent.
- **Protest**: See process at Resources Flagler County under Procurement Manual.
- **Respondent**: That person or entity, including employees, servants, partners, principals, agents and assignees of the person or entity that submits a proposal for the purpose of obtaining a Contract with the County for the provision of the services requested in the RFP.
- **Respondent's Project Manager**: The Project Manager has responsibility for administering this Contract for the Respondent and will be designated prior to execution of the Contract.
- **Task Assignment**: Specific, detailed services or work placed against an awarded and established continuing services Contract memorialized as an Amendment to this Contract by the parties prior to the commencement of such Work or Services by the Consultant.

County of Flagler
Financial Services
E. John Brower MBA, CGFO, CPM, Director
1769 East Moody Boulevard | Building 2, Bunnell, FL 32110

[THERAPEUTIC ASSISTED LIVING CORP] RESPONSE DOCUMENT REPORT

RFP No. 26-RFP-022

Operation and Program Administration of the Flagler County Adult Day Care at the David I. Siegel Center

RESPONSE DEADLINE: August 24, 2026 at 2:00 pm

Report Generated: Tuesday, August 25, 2026

Therapeutic Assisted Living Corp Response

CONTACT INFORMATION

Company:
Therapeutic Assisted Living Corp

Email:
therapeuticalf@gmail.com

Contact:
Latasha Rowell

Address:
25 Lyndenhurst Ln
Palm Coast, FL 32137-9521

Phone:
(904) 501-8991

Website:
www.therapeuticassistedliving.org

Submission Date:
Aug 24, 2026 12:10 PM (Eastern Time - New York)

ADDENDA CONFIRMATION

Addendum #1
Confirmed Aug 19, 2026 6:42 AM by Latasha Rowell

Addendum #2
Confirmed Aug 19, 2026 6:42 AM by Latasha Rowell

QUESTIONNAIRE

1. Acknowledgements

ACKNOWLEDGMENT*
By checking yes, the Respondent acknowledges the following:

- Information provided in the response is true and correct and that the submission of a response is final.
- The Respondent agrees to all terms and conditions contained in this solicitation and related exhibits.
- Respondent further agrees and acknowledges that no proprietary or confidential information has been submitted. By submitting this proposal or entering into this contract, Contractor/Respondent acknowledges that all documents submitted are public records and agrees that any records maintained, generated, received, or kept in connection with, or related to the performance of services or delivery of products provided under this proposal or contract are public records subject to the public records disclosure requirements of Florida Statutes sec. 119 et seq., and Article I, section 24 of the Florida Constitution.
- Responses may be withdrawn by the Respondent prior to the closing/offer date. Following the closing date, Respondent understands that a response may not be withdrawn.

Yes

SCOPE OF SERVICES ACKNOWLEDGEMENT*

By checking yes, vendor acknowledges the above and/or included Scope of Services and will furnish said product and/or services according to the specifications or scope of services detailed within this Solicitation if awarded.

Yes

BY CHECKING YES, THE VENDOR AGREES TO COMPLY WITH THE E-VERIFY REQUIREMENTS AS DESCRIBED IN THIS SECTION.*
Compliance with E-Verify Federal Requirements

The Contractor shall utilize the U.S. Department of Homeland Security's E-Verify system to verify the employment eligibility of all new employees hired by the Contractor / Consultant on or after the effective date of this Agreement and thereafter during the remaining term of the Agreement, including Subcontractors. Any subcontract entered into by Contractor with any Subcontractor performing work under this contract shall include the following language: "The Subcontractor shall utilize the U.S. Department of Homeland Security's E-Verify system to verify the employment eligibility of all new employees hired by the Contractor on or after the effective date of this Agreement and thereafter during the remaining term of the Agreement." The Contractor covenants and agrees that if it is found in violation of this section or the Executive Order, such violation shall be a material breach of this Agreement and Contractor shall indemnify, defend and hold harmless the County from any fines or penalties levied by a government agency, including the loss or repayment of grant funds by the County.

Yes

REGISTRATION ON SAM.GOV*
For any federally funded project, respondent agrees to register on SAM.gov if awarded a contract under this solicitation.

Yes

PLEASE PROVIDE YOUR UEI#*
S9X8KGANC2H4

REGISTRATION ON SUNBIZ.ORG*
Yes

PLEASE PROVIDE YOUR SUNBIZ.ORG DOCUMENT NUMBER*
P19000090814

PLEASE UPLOAD YOUR SUNBIZ.ORG CERTIFICATE.*
SUNBIZ_DEP_OF_CORP_.pdf

2026_ANNUAL_REPORT_SUNBIZ.pdf

INSURANCE ACKNOWLEDGEMENT*
By checking yes, Respondent agrees to the insurance requirements as detailed in the Required Types and Limits of Insurance Chart and the Required Types of Insurance; Insurance Requirements; and Proof of Insurance sub-sections in "General Terms and Conditions".

Yes

DRUG-FREE WORKPLACE*
Please download the below documents, complete, and upload.

- DRUG_FREE_WORKPLACE.pdf

Drug_free_workplace.pdf

NAME AND TITLE OF AUTHORIZED AGENT OF THE RESPONDENT*
Respondent acknowledges that the name and title of the signatory (the “Authorized Signatory”), as completed below, is authorized to execute contracts/agreements with Flagler County, and any affixed electronic or conformed signature of the Authorized Signatory shall be the act of and attributable to the Authorized Signatory. By signing this Agreement electronically, the Authorized Signatory does thereby adopt the electronic or conformed signature as his or her own and designates a copy of same for use as an official record by Flagler County.

If the below-named individual is not an authorized agent of the firm, as listed with the Florida Division of Corporations (Sunbiz), a Memorandum of Authority shall be uploaded giving that individual authorization to commit the firm to a contract.

Please provide the Complete Name and Title which shall indicate acknowledgment.

Latasha Rowell/President

CONFLICT OF INTEREST*
The award of this Solicitation is subject to Chapter 112, Florida Statutes. All respondents must disclose with their response the name of any officer, director, or agent who is also an employee of Flagler County. Further, all respondents must disclose the name of any Flagler County employee who owns, directly or indirectly, an interest of the Respondent's/Supplier's firm or any of its subsidiaries associated with this project. I certify that this proposal is made without prior understanding, agreement or connection with any corporation, firm or person submitting a proposal for the same services, and is in all respects fair and without collusion or fraud.

Respondent shall select 'No' if a conflict of interest as defined in this question does NOT exist. Please select 'Yes' if a conflict of interest as defined in this question DOES exist and shall be further described in the explanation below.

No

DO YOU OR ANY OWNER(S), PRINCIPAL(S), OR OFFICER(S) OF YOUR FIRM CURRENTLY SERVE ON ANY FLAGLER COUNTY BOARD(S) OR COMMITTEE(S)?*
Please indicate response.

No

2. Revisions, Addenda, Questions & Answers

All answers to questions of substance will be publicly published using the Question & Answer feature.

Participants are required to review all revisions and answers to questions published. Revisions within the Solicitation as well as responses posted through the 'Question & Answer' feature are authoritative and shall be considered an addendum to the Solicitation.

All information in this Solicitation, including information provided through the 'Question & Answer' feature are incorporated into the Solicitation or any Contract resulting from this Solicitation.

ADDENDA/QUESTIONS ACKNOWLEDGEMENT*
By selecting YES below, participants are confirming that they have reviewed revisions and all answers to questions published and any addenda up until the Solicitation closing date and have given consideration to all information in preparing the response to this Solicitation. Selecting YES will serve as confirmation of acknowledgement.

Yes

3. Public Entity Crime

PUBLIC ENTITY CRIME ACKNOWLEDGEMENT*
Public Entity Crimes - Pursuant to Section 287.133(12)(a) of the Florida Statutes, a person or affiliate who has been placed on the convicted vendor list following a conviction for a public entity crime may not submit a Submittal Package (Bid Response) on a contract to provide any goods or services to a public entity, may not submit a bond on a contract with a public entity for the construction or repair of a public building or public work, may not submit Submittal Package (Bid Response) on leases of real property to a public entity may not be awarded or perform work as a contractor, supplier, subcontractor, or consultant under a contract with any public entity, and may not transact business with any public entity in excess of the threshold amount provided in Section 287.017 for Category Two ($25,000) for a period of 36 months from the date of being placed on the convicted vendor list. Respondent should read carefully all provisions of 287.133 and 287.134, Florida Statutes (2005).

By selecting 'Yes', the Respondent represents and warrants that the submission of its response/proposal does not violate Section 287.133, Florida Statutes (2005), nor Section 287.134, Florida Statutes (2005) or their successor. In addition to the foregoing, the Respondent represents and warrants that Respondent, Respondent’s subcontractors and Respondent’s implementer, if any, is not under investigation for violation of such statutes.

Yes

4. Certification Regarding Debarment, Suspension, Ineligibility and Voluntary Exclusion

ACKNOWLEDGMENT REGARDING DEBARMENT, SUSPENSION, INELIGIBILITY AND VOLUNTARY EXCLUSION*
By selecting 'Yes' below, the Respondent certifies to the best of its knowledge and belief, that the firm and any subcontractor/supplier in accordance with a response to this solicitation:

- are not presently debarred, suspended, proposed for debarment, declared ineligible, or voluntarily excluded from covered transactions by any Federal department or agency
- have not within a three-year period preceding this bid proposal been convicted of or had a civil judgment rendered against them for commission of fraud or a criminal offense in connection with obtaining, attempting to obtain, or performing a public (Federal, State, or local) transaction or contract under a public transaction; violation of Federal or State antitrust statutes or commission of embezzlement, theft, forgery, bribery, falsification or destruction of records, making false statements, or receiving stolen property.
- are not presently indicted for or otherwise criminally or civilly charged by a government entity (Federal, State, or local) with commission of any of the offenses enumerated in the previous paragraph of this certification.
- have not within a three (3) year period preceding this bid proposal had one or more public transactions (Federal, State, or local) terminated for cause or default.

Yes

5. Scrutinized Companies Certification

Per State of Florida Statute s. 287.135(5) Suppliers (companies) must acknowledge and agree to the 'Certification Regarding Prohibition Against Contracting with Scrutinized Companies' paragraph listed below. Respondents shall agree by marking the option below. Respondents neglecting to respond may be disqualified from consideration of award and deemed non-responsive.

I hereby certify that neither the responding entity, nor any of its wholly owned subsidiaries, majority-owned subsidiaries, parent companies, or affiliates of such entities or business associations, that exists for the purpose of making profit have been placed on the Scrutinized Companies That Boycott Israel List created pursuant to s. 215.4725 of the Florida Statutes, or are engaged in a boycott of Israel.

In addition, if this Solicitation is for a contract for goods or services where the total contract value is one million dollars ($1,000,000) or more, I hereby certify that neither the responding entity, nor any of its wholly owned subsidiaries, majority- owned subsidiaries, parent companies, or affiliates of such entities or business associations, that exists for the purpose of making profit are on the Scrutinized Companies with Activities in Sudan List or the Scrutinized Companies with Activities in the Iran Petroleum Energy Sector List, created pursuant to s. 215.473 of the Florida Statutes, or are engaged in business operations in Cuba or Syria as defined in said statute.

I understand and agree that the County may immediately terminate any contract resulting from this Solicitation upon written notice if the responding entity (or any of those related entities of respondent as defined above by Florida law) are found to have submitted a false certification or any of the following occur with respect to the company or a related entity: (i) it has been placed on the Scrutinized Companies that Boycott Israel List, or is engaged in a boycott of Israel, or (ii) for any contract for goods or services of one million dollars ($1,000,000) or more, it has been placed on the Scrutinized Companies with Activities in Sudan List or the Scrutinized Companies with Activities in the Iran Petroleum Energy Sector List, or it is found to have been engaged in business operations in Cuba or Syria.

BY SELECTING 'YES', THE RESPONDENT ACKNOWLEDGES AND AGREES TO THE 'CERTIFICATION REGARDING PROHIBITION AGAINST CONTRACTING WITH SCRUTINIZED COMPANIES.' *
Yes

6. Forms/Documentation

PROPOSAL FORM*
Please download the attached form, complete, and upload the completed form.

- Proposal_Form_11.18.24.pdf

Proposal_form_2.pdf

MEMORANDUM OF AUTHORITY

If the Authorized Signatory identified in Section 1.11 above is not an authorized agent of the firm, as listed with the Florida Division of Corporations (Sunbiz), a memorandum of authority, signed by an authorized agent, shall be uploaded in this section giving that individual (Authorized Signatory) the authority to commit the firm to a contract.

No response submitted

W-9 *
Please attach current W-9 Form

Therapeutic_ALF_W9.pdf

PROOF OF INSURANCE *
Please provide Proof of Insurance - evidence of required insurance coverage or proof of insurability in the amounts indicated. If available, a properly completed ACORD Form is preferable. Upon award, final forms must contain the correct solicitation and/or project number and Flagler County contact person.

Firms that have owner/operators that have filed a "Notice of Election to be Exempt" shall submit a copy with the response

Insurance_Plastridge_Annual_.pdf

HOLD HARMLESS AGREEMENT
Please download the below document, complete, and upload.

Only upload if applicable in accordance with Florida Law.

- Flagler_Hold_Harmless_Agree...

Hold_Harmless_Agreement_.pdf

PROFESSIONAL CERTIFICATION/LICENSES*
Respondent and their Subconsultants/Subcontractors shall have a current professional license from the appropriate governing board to practice in the State of Florida at the time of its submittal. Respondent and their Subconsultants/Subcontractors shall submit with their submittal, copies of their professional license.

Licenses shall remain current for the entire term of the Contract resulting from this solicitation.

Therapeutic_Assisted_Living_Corp_-_11969778_-_LIC_LTR_-_9.pdf
Latasha_Rowell_Administrative_Cert_2.pdf
Latasha_Rowell's_Physical_Therapist_Assisted_License_.png

PROHIBITION AGAINST CONTINGENT FEES*
Respondent shall properly complete, notarize and upload the attached disclosure statement certifying that he or she has not employed or retained any company or person, other than a bona fide employee working solely for the respondent to solicit or secure this contract and that he or she has not paid or agreed to pay any person, company, corporation, individual, or firm, other than a bona fide employee working solely for the respondent any fee, commission, percentage, gift, or other consideration contingent upon or resulting from award or making of this contract.

- Prohibition_Against_Contige...

Prohibition_against_contingent_fees.pdf

HUMAN TRAFFICKING ATTESTATION PURSUANT TO SECTION 787.06, FLORIDA STATUTES*
A duly authorized officer or representative of the Respondent (non-governmental entity) shall complete the included Flagler Human Trafficking Attestation Form in compliance with Section 787.06(13), Florida Statutes, (2024).

Download the attached form, complete, and upload completed form.

- Flagler_Human_Trafficking_A...

Human_Trafficing_2.pdf

FINANCIAL STATEMENT *
All Respondents shall be prepared to supply a financial statement upon request, preferably a certified audit of the last available fiscal year.

Confirmed

7. Proposal Information

Proposals shall be clear, concise, indexed by subject and properly submitted per the requirements. Documents shall be uploaded by the Respondent to the appropriate section.

Failure to provide the required information may result in the proposal not being considered.

DOCUMENTATION SUBMITTAL*

Only provide documentation for the required item being asked under each section. Posting the whole proposal under each requirement will have you marked as non responsive and your bid will not be considered.

Yes

SUBMITTAL LETTER / FIRM PROFILE *

Submittal Letter signed by an authorized agent of the firm.

A brief profile of the firm, including:

A. A brief history of the business;

B. Organizational structure of business;

C. Designation of the legal entity by which the business operates (i.e., sole proprietorship, partnership, limited liability partnership, corporation, limited liability corporation, etc.) including documentation from the appropriate state's agency confirming firm's legal entity type. For non-Florida businesses, submit documentation from the state in which the business was formed and documentation from the State of Florida providing authorization to perform business in the state of Florida;

D. A Florida Department of State, Division of Corporations' Sunbiz report available at www.sunbiz.org; If firm is not currently registered to do business within the State of Florida (Sunbiz), proof of registration shall be submitted prior to award.

E. Ownership interests;

F. Active business venues (counties, states, etc.);

G. Present status and projected direction of business;

H. The overall qualifications of the business to provide the services requested;

I. The qualifications of the firm's employees who will work on the Contract;

J. Respondent shall also list any lawsuits in which their team (firm & sub consultants) has been involved in relative to company contracts or other company business over the last five (5) years. The respondent shall also list any work their team failed to complete in accordance with any contract in the last five (5) years and describe details regarding the non-performance, including listing any officer or partner of their team who in the last five (5) years failed to complete a contract handled in his/her name.

T.A.L_MEDICAID_AGREEMENT.jpg
T.A.L_AWARDS_RECOGNITION_LETTERS_.pdf
SUNBIZ_DEP_OF_CORP_.pdf
Best_Business_Rate_2026.jpg
AHCA's_deficiency_free_surveys_2.pdf
T.A.L_Submittal_letter_.pdf
Therapeutic_Assisted_Living_Corp_Career_Source_Status_(1).eml

FIRM/EMPLOYEE QUALIFICATIONS *
Qualifications of the firm and the employees that will be assigned to the County.

Key personnel inclusive of resumes, licenses, business venues, etc.

LatashaRowell_WBE_&_MBE_Professional_Resume_Recognition_Updated.pdf
Treyvian_William's_resume_.pdf
Treyvian_Williams_administrative_cert.pdf
Rowell_Resume_2.pdf
Donald_Rowell_administrative_cert.pdf
DEON_NELSON'S_ACTIVE_CNA_.htm
Treyvian_Williams_Active_CNA_.htm
Latasha_Rowell's_Physical_Therapist_Assisted_License__(3).png
Latasha_Rowell_Administrative_Cert_2_(3).pdf

DEON_NELSON_Resume_.docx

SIMILAR PROJECTS AND REFERENCES *
The information provided in this section, must be current and the County must be able to contact references for verification as part of the evaluation process.

Unless specifically asked by the County, Flagler County shall not be listed as a reference. The respondent shall provide examples of similar projects which best illustrates the Respondent's qualification for the scope of services.

The Respondent shall provide examples of similar projects which best illustrates the proposed team's qualification for the scope of services. Respondent shall state the project title; location; owner name, address, and telephone number; years completed; project cost; brief description of project and relevance to this RSQ.

Provide a client reference for each of the representative projects including project name, client name, address, contact name and phone number and E-mail address. It is the firm's responsibility to ensure E-mail addresses provided are current and accurate. Use the attached Reference Form.

Please download the below document, complete, and upload.

- References_Form_11.18.24.pdf

One_Pharmacy_Letter_of_Support_Dr._Shoyoye.pdf
Representative_Project_No._1.pdf
Gentiva_recommendation.pdf
References_.pdf
Family_Recommendation_Debra_.pdf
Aviata_Recommendation_2.pdf
Excellence_Health_letter_of_recommendation_2.pdf

PROJECT APPROACH*
Overall project methodology/approach to support the needs and objectives of the project; including method for quality control.

7.5_Project_Approach.pdf
Local_Presents_Workforce_.pdf

PRICE PROPOSAL FORM*
Please download the below documents, complete, and upload.

- PRICE_PROPOSAL_FORM.pdf

Pricing information has not been unsealed yet

ACHA FORM 31-00-0009*
Please download the below documents, complete, and upload.

- ACHA_Form_31-00-0009.xls

PROOF_OF_FINANCIAL_ABILITY_REG_&_ASS.pdf

State of Florida
Department of State

I certify from the records of this office that THERAPEUTIC ASSISTED LIVING CORP is a corporation organized under the laws of the State of Florida, filed on November 26, 2019, effective November 19, 2019.

The document number of this corporation is P19000090814.

I further certify that said corporation has paid all fees due this office through December 31, 2025, that its most recent annual report/uniform business report was filed on March 17, 2025, and that its status is active.

I further certify that said corporation has not filed Articles of Dissolution.

Given under my hand and the Great Seal of the State of Florida at Tallahassee, the Capital, this the Seventeenth day of March, 2025

GREAT SEAL OF THE STATE OF FLORIDA
IN GOD WE TRUST

Secretary of State

Tracking Number: 2730115038CC

To authenticate this certificate,visit the following site,enter this number, and then follow the instructions displayed.

https://services.sunbiz.org/Filings/CertificateOfStatus/CertificateAuthentication

2026 FLORIDA PROFIT CORPORATION ANNUAL REPORT

DOCUMENT# P19000090814

Entity Name: THERAPEUTIC ASSISTED LIVING CORP

Current Principal Place of Business:

25 LYNDENHURST LN
PALM COAST, FL 32137

Current Mailing Address:

25 LYNDENHURST LN,
PALM COAST, FL 32137

FEI Number: 84-3805381

Name and Address of Current Registered Agent:

ROWELL, LATASHA D
25 LYNDENHURST LN
PALM COAST,, FL 32137 US

FILED
Feb 12, 2026
Secretary of State

6597845393CC

Certificate of Status Desired: Yes

The above named entity submits this statement for the purpose of changing its registered office or registered agent, or both, in the State of Florida.

SIGNATURE: LATASHA ROWELL 02/12/2026
Electronic Signature of Registered Agent — Date

Officer/Director Detail :

Title	P
Name	ROWELL, LATASHA D
Address	25 LYNDENHURST LN
City-State-Zip:	PALM COAST FL 32137

I hereby certify that the information indicated on this report or supplemental report is true and accurate and that my electronic signature shall have the same legal effect as if made under oath; that I am an officer or director of the corporation or the receiver or trustee empowered to execute this report as required by Chapter 607, Florida Statutes; and that my name appears above, or on an attachment with all other like empowered.

SIGNATURE: LATASHA ROWELL PRESIDENT 02/12/2026
Electronic Signature of Signing Officer/Director Detail — Date

DRUG FREE WORKPLACE

I, the undersigned, in accordance with Florida Statute 287.087, hereby certify that, (print/type name of firm):

LaTasha Rowell

- Publishes a written statement notifying that the unlawful manufacture, distribution, dispensing, possession, or use of a controlled substance is prohibited in the Workplace named above, and specifying actions that will be taken against violations of such prohibition.
- Informs employees about the dangers of drug abuse in the workplace, the firm's policy of maintaining a drug free working environment, and available drug counseling, rehabilitation, and employee assistance programs, and the penalties that may be imposed upon employees for drug use violations.
- Gives each employee engaged in providing commodities or contractual services that are under bid or proposal, a copy of the statement specified above.
- Notifies the employees that as a condition of working on the commodities or contractual services that are under bid or proposal, the employee will abide by the terms of the statement and will notify the employer of any conviction of, please or guilty or nolo contendere to, any violation of Chapter 1893, or of any controlled substance law of the State of Florida or the United States, for a violation occurring in the workplace, no later than five (5) days after such conviction, and requires employees to sign copies of such written statement to acknowledge their receipt.
- Imposes a sanction on, or requires the satisfactory participation in, a drug abuse assistance or rehabilitation program, if such is available in the employee's community, by any employee who is so convicted.
- Makes a good faith effort to continue to maintain a drug free workplace through the implementation of the Drug Free Workplace program.
- "As a person authorized to sign this statement, I certify that the above-named business, firm or corporation complies fully with the requirements set forth herein".

LaTasha Rowell
Authorized Signature

8-19-2026
(Date)

LaTasha Rowell
(Print Name)

STATE OF FLORIDA, COUNTY OF Flagler

The foregoing instrument was acknowledged before me this 19 day of August, 2026 by LATASHA Rowell, who is personally known to me or who has produced ___ Florida Driver License as identification and who did take an oath.

My Commission Expires: 12-03-2029

Notary Public

COLETTE ROBINSON
Commission # HH 746154
Expires December 3, 2029

8/19/2026
Date

PROPOSAL FORM

The undersigned hereby declare(s) that [firm name] Therapeutic Assisted Living Corp. has carefully examined the specifications to furnish the products and/or services detailed in the technical specifications or scope of work and will furnish said product or services according to the specifications or scope of work detailed within this RFP.

I hereby certify that I have read and understand the requirements of this Request for Proposals and that I, as the proposer, will comply with all requirements, and that I am duly authorized to execute this proposal/offer document and any contract(s) and/or other transactions required by award of this RFP.

Vendor hereby acknowledges that the submittal has been approved by an authorized signatory with the firm who is authorized to execute contracts/agreements with Flagler County Board of County Commissioners. Vendor further agrees that by submitting the proposal electronically, the authorized signatory does thereby accept and acknowledge use as an official record with Flagler County.

Further, as attested to by below signature, I will provide the required insurance, per the *Required Types* of *Insurance*, upon notification of recommendation of award.

The County reserves the right to negotiate with the award vendor(s) for additional items similar in nature not known at time of closing.

The vendor acknowledges that information provided in this proposal is true and correct:

× LaTasha Rowell
Signature / Authorized Signatory

LaTasha Rowell
Printed Name

Administrator / Owner / President — 8/19/2026
Title — Date

Therapeutic Assisted Living Corp
Company Name

25 Lyndenhurst lane Palm Coast FL. 32137
Full Address

904-501-8991 — 844-769-0772 — therapeuticalf@gmail.com
Telephone — Fax — E-mail Address

090326504 — 84-3805381
Dun & Bradstreet # — Federal I.D. #

Form **W-9**
(Rev. December 2011)
Department of the Treasury
Internal Revenue Service

Request for Taxpayer Identification Number and Certification

Give Form to the requester. Do not send to the IRS.

Print or type
See Specific Instructions on page 2.

Name (as shown on your income tax return)
LaTasha Dion Rowell

Business name/disregarded entity name, if different from above
Therapeutic Assisted Living Corp.

Check appropriate box for federal tax classification:
☐ Individual/sole proprietor ☐ C Corporation ☑ S Corporation ☐ Partnership ☐ Trust/estate

☑ Limited liability company. Enter the tax classification (C=C corporation, S=S corporation, P=partnership) ▶ S-Corp.

☐ Other (see instructions) ▶

☐ Exempt payee

Address (number, street, and apt. or suite no.)
25 Lyndenhurst Lane

Requester's name and address (optional)

City, state, and ZIP code
Palm Coast FL. 32137

List account number(s) here (optional)

Part I Taxpayer Identification Number (TIN)

Enter your TIN in the appropriate box. The TIN provided must match the name given on the "Name" line to avoid backup withholding. For individuals, this is your social security number (SSN). However, for a resident alien, sole proprietor, or disregarded entity, see the Part I instructions on page 3. For other entities, it is your employer identification number (EIN). If you do not have a number, see *How to get a TIN* on page 3.

Note. If the account is in more than one name, see the chart on page 4 for guidelines on whose number to enter.

Social security number
5 9 0 - 0 7 - 7 5 5 0

Employer identification number
8 4 - 3 8 0 5 3 8 1

Part II Certification

Under penalties of perjury, I certify that:

1. The number shown on this form is my correct taxpayer identification number (or I am waiting for a number to be issued to me), and
2. I am not subject to backup withholding because: (a) I am exempt from backup withholding, or (b) I have not been notified by the Internal Revenue Service (IRS) that I am subject to backup withholding as a result of a failure to report all interest or dividends, or (c) the IRS has notified me that I am no longer subject to backup withholding, and
3. I am a U.S. citizen or other U.S. person (defined below).

Certification instructions. You must cross out item 2 above if you have been notified by the IRS that you are currently subject to backup withholding because you have failed to report all interest and dividends on your tax return. For real estate transactions, item 2 does not apply. For mortgage interest paid, acquisition or abandonment of secured property, cancellation of debt, contributions to an individual retirement arrangement (IRA), and generally, payments other than interest and dividends, you are not required to sign the certification, but you must provide your correct TIN. See the instructions on page 4.

Sign Here Signature of U.S. person ▶ LaTasha Rowell Date ▶ 8/8/2024

General Instructions

Section references are to the Internal Revenue Code unless otherwise noted.

Purpose of Form

A person who is required to file an information return with the IRS must obtain your correct taxpayer identification number (TIN) to report, for example, income paid to you, real estate transactions, mortgage interest you paid, acquisition or abandonment of secured property, cancellation of debt, or contributions you made to an IRA.

Use Form W-9 only if you are a U.S. person (including a resident alien), to provide your correct TIN to the person requesting it (the requester) and, when applicable, to:

1. Certify that the TIN you are giving is correct (or you are waiting for a number to be issued),
2. Certify that you are not subject to backup withholding, or
3. Claim exemption from backup withholding if you are a U.S. exempt payee. If applicable, you are also certifying that as a U.S. person, your allocable share of any partnership income from a U.S. trade or business is not subject to the withholding tax on foreign partners' share of effectively connected income.

Note. If a requester gives you a form other than Form W-9 to request your TIN, you must use the requester's form if it is substantially similar to this Form W-9.

Definition of a U.S. person. For federal tax purposes, you are considered a U.S. person if you are:

- An individual who is a U.S. citizen or U.S. resident alien,
- A partnership, corporation, company, or association created or organized in the United States or under the laws of the United States,
- An estate (other than a foreign estate), or
- A domestic trust (as defined in Regulations section 301.7701-7).

Special rules for partnerships. Partnerships that conduct a trade or business in the United States are generally required to pay a withholding tax on any foreign partners' share of income from such business. Further, in certain cases where a Form W-9 has not been received, a partnership is required to presume that a partner is a foreign person, and pay the withholding tax. Therefore, if you are a U.S. person that is a partner in a partnership conducting a trade or business in the United States, provide Form W-9 to the partnership to establish your U.S. status and avoid withholding on your share of partnership income.

Plastridge INSURANCE SINCE 1919

08/21/2026

RE: RFP 26-RFP-022 – Operation and Program Administration of the Flagler County Adult Day Care at the David I. Siegel Center, located at 1000 Belle Terre Blvd., Palm Coast, Florida/Therapeutic Assisted Living Corp.

To Flagler County,

This letter serves as confirmation that Therapeutic Assisted Living Corp is actively working with our agency to secure all necessary insurance coverages required by RFP 26-RFP-022 for Adult Day Care Services. These coverages will include:

- General Liability Insurance $1m/$2m Estimated Annual Premium $10k
- Professional Liability Insurance $1m/$1m Estimated Annual Premium Included with General Liability
- Worker's Compensation Insurance Statutory Limits Estimated Annual Premium $1,100
- Employers Liability $1m Estimated Annual Premium included in Workers Compensation Premium
- Auto Liability Insurance $1m Symbol 7,8,9 Estimated Annual Premium symbol 7 $6k and 7,8,9 $20k
- Pollution Liability Estimated Annual Premium $500
- AM Best "A-" rated or better
- The required policies and endorsements will be issued in compliance with Flagler County's additional insured, primary and non-contributory, and waiver of subrogation requirements as applicable under RFP 26-RFP-022
- Any additional insurance as required by the final contract terms

We confirm that our agency is prepared to issue these coverages immediately upon contract award and prior to the commencement of services. Should any additional documentation be required during the evaluation process, we will be pleased to provide it.

Sincerely,

Shelagh Grubb

Shelagh Grubb, CPCU, CIC

O: 800 290 1143 **D:** 561 819 1559 | **F:** 561 819 1656 I **C**: 407 235 5389

Plastridge Insurance Agency | Plastridge.com

Plastridge INSURANCE SINCE 1919
HEALTHCARE DIVISION

HOLD HARMLESS AGREEMENT

I, LaTasha Rowell, (*print owner's name*), am the owner of Therapeutic Assisted Living Corp. (*print company name*), an incorporated/unincorporated business operating in the State of Florida. As such, I am bound by all laws of the state of Florida, including but not limited to those regarding the workers' compensation law.

I hereby affirm that I or [the above-named business] employs fewer than four employees, all of whom are listed below, including myself, and therefore, the business is exempt from the statutory requirement for workers' compensation insurance for its employees. I certify that I will provide Flagler County Board of County Commissioners with the name of each new employee together with all required waivers and releases for each prior to any employee being allowed to work to provide services under the Contract set forth below. If any such employee is allowed to work without a signed waiver and release, such action will be a material breach of this Agreement. All signed waivers and releases shall be furnished before the commencement of any work by an employee or the undersigned to the County Project Manager or designated county representative.

On_____, 20_, Flagler County Board of County Commissioners and I or (*the above-named business)* entered into a Contract for_____(*please insert name of Contract*) (hereinafter "Agreement") which is incorporated by reference herein.

On behalf of myself, my business, and the employees listed below, I and they hereby agree to waive and release any and all workers' compensation claims or liens under Chapter 440, Florida Statutes, against Flagler County Board of County Commissioners and its agents, officials and employees, arising from any work or services provided under the Agreement whether or not it shall be alleged or determined that the act was caused by intention, or through negligence or omission of Flagler County Board of County Commissioners or its agents, officials and employees or subcontractors.

In the event that a workers' compensation claim or lien is made against Flagler County Board of County Commissioners and/or its agents, officials or employees by myself or my employees or agents as a result of any work or services performed under the Agreement, I agree to indemnify, keep and hold harmless Flagler County Board of County Commissioners, its agents, officials and employees, against all injuries, deaths, losses, damages, claims, liabilities, judgments, costs and expenses, direct, indirect or consequential (including, but not limited to, fees and charges of attorneys and other professionals) arising out of the Agreement with Flagler County Board of County Commissioners, whether or not it shall be alleged or determined that the act was caused by intention or through negligence or omission of Flagler County Board of County Commissioners or its employees, agents, or subcontractors. I or the above-named business shall pay all charges of attorneys, and all costs and other expenses incurred in connection with the indemnity provided herein, and if any judgment shall be rendered against Flagler County Board of County Commissioners in any action indemnified hereby, I or the above-named business shall, at my or its own expense, satisfy and discharge the same. The foregoing is not intended, nor should it be construed as, a waiver of sovereign immunity of Flagler County Board of County Commissioners under Section 768.28, Florida Statutes.

Owner: Latasha Rowell (print name) Latasha Rowell
(signature)

Employee 1: Treyvon Williams (print name) Treyvian Williams
(signature)

Employee 2: Deon Nelson (print name) Deon Nelson
(signature)

Employee 3: [signature] (print name) Donald Rowell
(signature)

STATE OF Florida
COUNTY OF Flagler

Sworn to and subscribed before me this 19 *day of* August, 2024 *by* Latasha Rowell, *who is/are personally known to me or who has/have produced* Florida Driver License *as identification.*

[signature]
NOTARY PUBLIC – STATE OF Florida

Type or print name:
Colette Robinson

Commission No.: HH 746154

Commission Expires: 12-03-2029

Seal: COLETTE ROBINSON
Commission # HH 746154
Expires December 3, 2029

View current license information at: Floridahealthfinder.gov

LICENSE #: 13526
CERTIFICATE #: 72589

State of Florida

AGENCY FOR HEALTH CARE ADMINISTRATION
DIVISION OF HEALTH QUALITY ASSURANCE

ASSISTED LIVING FACILITY

LICENSED with LIMITED MENTAL HEALTH

This is to confirm that THERAPEUTIC ASSISTED LIVING CORP has complied with the rules and regulations adopted by the State of Florida, Agency for Health Care Administration, as authorized by Chapter 429, Part I, Florida Statutes and 59A-36, Florida Administrative Code, and is authorized to operate the following:

THERAPEUTIC ASSISTED LIVING CORP
25 Lyndenhurst Lane
Palm Coast, FL 32137

Total Capacity: 6
Optional State Supplementation Residents: 0
Private Pay Residents: 6

EFFECTIVE DATE: 10/21/2024

EXPIRATION DATE: 10/20/2026

Shevaun L. Harris, Secretary

RON DESANTIS
GOVERNOR

SHEVAUN L. HARRIS
SECRETARY

July 11, 2025

Email: latashagilyard@gmail.com

Latasha Dion Rowell, Administrator
Therapeutic Assisted Living Corp
25 Lyndenhurst Lane
Palm Coast, FL 32137

File Number: 11969778
License Number: 13526
Provider Type: Assisted Living Facility

RE: Facility located at 25 Lyndenhurst Lane, Palm Coast

Dear Administrator:

The enclosed Assisted Living Facility license with license number 13526 and certificate number 72589 is issued for the above provider effective October 21, 2024 through October 20, 2026. The license is being issued for approval of the renewal application.

The Agency no longer mails hard copies of licenses. Per Section 408.804(2), Florida Statutes, providers are required to print the license and post it in a conspicuous place readily visible to clients at the entrance of your facility.

Review your certificate thoroughly to ensure that all information is correct and consistent with your records. If errors are noted, please contact the Assisted Living Unit.

Please take a short customer satisfaction survey on our website at ahca.myflorida.com/survey/ to let us know how we can serve you better. Additional licensure information can be found at http://ahca.myflorida.com/assistedliving.

If we may be of further assistance, please contact the unit at (850) 412-4304 or me directly at 850-412-4329 or by email at Pearlie.Austin@ahca.myflorida.com.

Sincerely,

Pearlie Austin

Pearlie Austin
Medical Health Care Program Analyst
Assisted Living Unit
Division of Health Quality Assurance

CERTIFICATE of ACHIEVEMENT

Conferred to:

Latasha D. Gilyard

For obtaining a passing score on the

ASSISTED LIVING FACILITY CORE COMPETENCY TEST

Certification #: ***171241826***

Presented by

The MacDonald Research Institute Testing Office
28953 SR 54, Wesley Chapel, FL 33543

TMRI

The MacDonald Research Institute

Mary C. Mayhew, Secretary
Agency for Health Care Administration

December 14, 2019

Date

MQA Online Services

Logged in as ***Rowell, Latasha Dion***

Update Account | Logoff | Contact Us

My Dashboard

Don't Delay, Get Screened today!

Effective July 1, 2025, HB 975 requires that all health care practitioners undergo a fingerprint-based background screening as a requirement for obtaining licensure. If you are renewing your license with the Department, you must have a screening completed for your renewal application to be processed. For detailed information, including frequently asked questions, visit https://flhealthsource.gov/backgroundscreening/. Exceptions to this requirement: Emergency Medical Technician, Paramedic, Radiological Technician, Pharmacy Interns, and Registered Pharmacy Technicians.

Important information about your dashboard:

- To download a copy of your e-License, please navigate to the **"Licensure Documents"** menu located within the **"Additional Activities"** section below.
- When your profession opens for renewal a **"Renew My License"** option will become available no later than 90 days prior to your license expiration date. If you do not see the **"Renew My License"** option, please check back later.
- If you are trying to **reactivate from an inactive or a retired status**, this cannot be completed online unless you are eligible to reactivate your inactive license during a public health emergency pursuant to s. 381.00315(1)(c)3., Florida Statutes. Please contact your board office for more information.
- If your profession is not in renewal and you need a duplicate license, to request a name change or perform any other license maintenance activity, please choose your option under **"Manage My License"**.
- If you have not yet added your license to your account, you can do this by selecting the **"Add My License or Previous Application"** option under the **"Additional Activities"** section below.

To begin, choose an option then hit the **"Select"** button. You will return to this dashboard after you have finished.

License Information Hide Details

License Number:	**#26036**
License Type:	**Physical Therapist Assistant**
License Status:	**Clear**
License Expiry:	**11/30/2027**
Address:	**25 LYNDENHURST LN PALM COAST FL 32137**
Phone:	**904-501-8991**

Manage My License

Physical Therapist Assistant #26036 | Choose an Application | Select

My Application

To start a new application or resume a previously saved application.

PROHIBITION AGAINST CONTINGENT FEES:

In accordance with Florida Statute 287.055(6)(a), the following statement, duly signed and notarized, must be included in each proposal:

The firm, Therapeutic Assistant Living Corp., warrants that he or she has not employed or retained any company or person, other than a bona fide employee working solely for the respondent to solicit or secure this agreement and that he or she has not paid or agreed to pay any person, company, corporation, individual, or firm, other than a bona fide employee working solely for the respondent any fee, commission, percentage, gift, or other consideration contingent upon or resulting from award or making of this agreement.

By LaTasha Rowell Date 8/19/2026
(Signature)

By LaTasha Rowell, President, Administrator
Corporate Officer Name & Title

STATE OF Florida
COUNTY OF Flagler

Sworn to/affirmed and subscribed before me this 19 *day of* August, 2026, *by* LaTasha Rowell, *who is personally known to me or who has produced* Florida Driver License *as identification.*

NOTARY PUBLIC – STATE OF Florida
Type or print name: Colette Robinson
Commission No.: HH 746154
Commission Expires: 12-03-2029

(Seal)

COLETTE ROBINSON
Commission # HH 746154
Expires December 3, 2029

Contractor Name: LaTasha Rowell
Solicitation Number: 26-RFP-022

HUMAN TRAFFICKING ATTESTATION PURSUANT TO SECTION 787.06, FLORIDA STATUTES

Name of Entity/Contractor: Therapeutic Assisted Living Corp ("Nongovernmental Entity")

This form has been completed by a duly authorized officer or representative of the Nongovernmental Entity in conjunction with the execution, renewal, or extension of a contract with Flagler County Board of County Commissioners, a governmental entity and political subdivision of the State of Florida, ("Governmental Entity") in compliance with Section 787.06(13), Florida Statutes, (2024).

The Nongovernmental Entity acknowledges that Section 787.06(13), Florida Statutes, provides that when a contract is executed, renewed, or extended between a nongovernmental entity and a governmental entity, the nongovernmental entity must provide the governmental entity with an affidavit signed by an officer or a representative of the nongovernmental entity under penalty of perjury attesting that the nongovernmental entity does not use coercion for labor or services. For purposes of this requirement, "labor" means work of economic or financial value and "services" means any act committed at the behest of, under the supervision of, or for the benefit of another. The term, "services" includes, but is not limited to, forced marriage, servitude, or the removal of organs.

Pursuant to Section 787.06, Florida Statutes, when a contract is executed, renewed, or extended between you, a nongovernmental entity, and Flagler County Board of County Commissioners, a governmental entity in the State of Florida, you are hereby providing this affidavit under penalties of perjury that you do not use ***coercion to* employ any person for *labor* or *services,*** Coercion includes, without limitation, using or threatening to use physical force against any person; restraining, isolating, or confining or threatening to restrain, isolate, or confine any person without lawful authority and against her or his will; using lending or other credit methods to establish a debt by any person when labor or services are pledged as a security for the debt, if the value of the labor or services as reasonably assessed is not applied toward the liquidation of the debt, the length and nature of the labor or services are not respectively limited and defined; destroying, concealing, removing, confiscating, withholding, or possessing any actual or purported passport, visa, or other immigration document, or any other actual or purported government identification document, of any person; causing or threatening to cause financial harm to any person; enticing or luring any person by fraud or deceit; or providing a controlled substance as outlined in Schedule I or Schedule II of Section 893.03, Florida Statutes, to any person for the purpose of exploitation of that person.

This signed attestation is provided to the Governmental Entity to comply with the statutory requirement. if, at any time in the future, the Nongovernmental Entity does use coercion for labor or services, the Nongovernmental Entity will immediately notify the Governmental Entity and no contracts may be executed, renewed, or extended between the parties.

This attestation is made for the benefit of, and reliance by, the Governmental Entity.

Under penalties of perjury, I declare that I have read the foregoing statement and that the facts stated in it are true.

Printed Name: LaTasha Rowell Title: Administrator, President

Signature: LaTasha Rowell Date: 8/19/2024

RON DESANTIS
GOVERNOR

SHEVAUN L. HARRIS
SECRETARY

0332073790

PRV-9006-D/XX/0332073790/1
THERAPEUTIC ASSISTED LIVING CORP
25 LYNDENHURST LN
PALM COAST FL 32137-9521

August 13, 2026

Re: **Florida Medicaid Provider ID: 1084689**

Dear Provider:

Welcome to the Florida Medicaid program.

The Agency for Health Care Administration (Agency) has approved the Florida Medicaid provider renewal application for the provider listed above, and has elected to enter into an agreement between the Agency and the provider for purposes of the provider's participation in the Florida Medicaid program.

No agency signature is required to make this agreement valid and enforceable.

The agreement will remain in effect until **10/21/2029**, unless otherwise terminated.

The agreement is renewable only by mutual consent of the two parties and may be terminated without cause upon thirty (30) days written notice by either party.

The agreement becomes null and void upon transfer of assets, change of ownership, or upon discovery by the agency of the submission of a materially incomplete, misleading or false provider application unless subsequently ratified or approved by the agency.

For questions related to this letter, or any other provider enrollment or maintenance topic, please contact the Provider Enrollment Call Center at 1-800-289-7799, option 4.

Sincerely,

Florida Medicaid
Agency for Health Care Administration

cc:Provider File

PRV9006D 08/14b

2727 Mahan Drive • Mail Stop # 22
Tallahassee, FL 32308
AHCA.MyFlorida.com

Facebook.com/AHCAFlorida
X.com/AHCA_FL

BUSINESS RATE
2375 E CAMELBACK RD STE 600
PHOENIX AZ 85016-3493

BusinessRate

★ ★ ★ ★ ★

RECOGNIZING TOP PERFORMERS.
EMPOWERING BUSINESS EXCELLENCE.

078484 5 228 259 **********AUTO**SCF 328
THERAPEUTIC ASSISTED LIVING
25 LYNDENHURST LN
PALM COAST FL 32137-9521

July 24, 2026

Dear Therapeutic Assisted Living Team,

It is with great pleasure that we recognize your organization for its outstanding achievement as a **Top Assisted Living Facility in Palm Coast, 32137 for 2026, based on Google reviews.** This distinction reflects a level of excellence that has earned the confidence, respect, and praise of the customers you serve each day.

Therapeutic Assisted Living has distinguished itself among the highest-rated businesses in your category and market. This recognition is based on verified customer feedback and publicly available review data, drawn from more than 26 million businesses and 1.7 billion reviews compiled over 18 years, reflecting the voice of the people you serve.

Your complete ranking report is now available to view. It details the businesses you ranked ahead of, your percentile within your category, and your BusinessRate scores; a fuller picture of where you stand among top performers in Palm Coast, 32137. Many recognized businesses also choose to commemorate this achievement and share it with their community; options for displaying your recognition at your location, on your website, and with your customers are included alongside your report.

On behalf of BusinessRate, we extend our sincere congratulations on this well-earned recognition. We wish you continued success in the years ahead and thank you for your contribution to the economic vitality and service excellence of the Palm Coast, 32137 community.

Respectfully,

Kyle Pittman
Founder & President
BusinessRate

VIEW YOUR AWARD OPTIONS

Go to **businessrate.com/awards**

Enter code: **R9YRGY**

Powered by Google Reviews

Scan to view your award options

078484

★ ★ ★ ★ ★

August 4, 2026

Dear Latasha Gilyard,

You have been selected for inclusion as a **2026 Top Health Executive** in Global Who's Who Online, a recognition reserved for leaders who play a critical role in today's healthcare landscape. In your position as Alf Administrator of Therapeutic Assisted Living Corp., you oversee essential functions that support both clinical and operational excellence. This acknowledgment reflects the impact of your leadership and sets the stage for recognizing the vital contributions your organization provides to the community.

In addition, Therapeutic Assisted Living Corp. has been identified as a **2026 Top Health Service Organization**, representing Palm Coast, FL for the essential role it plays within the continuum of care. The continued growth and stability of Therapeutic Assisted Living Corp. reflect exceptional leadership, resilience, and a clear commitment to serving the healthcare needs of your community. Whether supporting patients directly or complementing the work of physicians and other providers, your organization contributes meaningfully to the strength and reliability of the healthcare system.

For more than two decades, Global Who's Who Online has served as a credible platform for recognizing top healthcare executives, distinguished professionals, and leading health service organizations. Our registry is widely referenced by patients, peers, and industry researchers seeking verifiable information. The platform incorporates adaptive A.I. that responds to key terms and medical aggravators tied to your profile, helping enhance online visibility and ensuring accurate representation in search results.

To activate your listing, please complete and return the response form below. There is no charge for inclusion. Upon receipt, you will receive your welcome email and log in credentials. You can respond by faxing the form to **888-460-8601**, or by scanning and email to **lindal@theglobalwhoswho.com**.

Sincerely,

Nancy Preston

First Name	M.I.	Last Name	Title	Signature
Latasha	D	Rowell	Administrator	Latasha Rowell

Current Organization/Company	E-Mail / Web Address
Therapeutic Assisted Living Corp	therapeuticalf@gmail.com

Street Address	City	State	Zip
25 Lyndenhurst lane	Palm Coast	FL	32137

Business Phone (Published by request)	Cell Phone (Not for publication)	Home Phone (Not for publication)
(904) 501-8991	secondary # (386) 597-2167	

Product/Services	Type of Organization
Assisted Living Services.	

If you wish to be removed from future faxes, call 1(516)814-7876
Recipients of this fax have a prior existing business relationship or have opted to receive offers through a third-party provider.
4250 Veterans Memorial Highway, Suite 2050, Holbrook, New York 11741
©Copyright 2025 All Rights Reserved.
Telephone (631)588-8600 Fax 1-888-460-8601

State of Florida
Department of State

I certify from the records of this office that THERAPEUTIC ASSISTED LIVING CORP is a corporation organized under the laws of the State of Florida, filed on November 26, 2019, effective November 19, 2019.

The document number of this corporation is P19000090814.

I further certify that said corporation has paid all fees due this office through December 31, 2025, that its most recent annual report/uniform business report was filed on March 17, 2025, and that its status is active.

I further certify that said corporation has not filed Articles of Dissolution.

Given under my hand and the Great Seal of the State of Florida at Tallahassee, the Capital, this the Seventeenth day of March, 2025

GREAT SEAL OF THE STATE OF FLORIDA
IN GOD WE TRUST

Secretary of State

Tracking Number: 2730115038CC

To authenticate this certificate,visit the following site,enter this number, and then follow the instructions displayed.

https://services.sunbiz.org/Filings/CertificateOfStatus/CertificateAuthentication


TOP 3
2026
AWARD WINNER
BusinessRate
Therapeutic
Assisted Living
Assisted Living Facility
Palm Coast, FL
32137
Powered by Google Reviews
BENCHMARK

RON DESANTIS
GOVERNOR

SHEVAUN L. HARRIS
SECRETARY

April 25, 2025

Latasha Rowell
Therapeutic Assisted Living Corp
25 Lyndenhurst Ln
Palm Coast, FL 32137

Dear Ms. Rowell:

This letter reports findings of a state licensure survey that was conducted on April 25, 2025 by a representative of this office. Attached is the provider's copy of the State (3020) Form, which indicates there were no discernible deficiencies noted on the date of the survey.

Thank you for the assistance provided. Should you have any questions please call the office at (904) 798-4201.

Sincerely,

Amanda Wisehart
Health Facility Evaluator Supervisor

AW/gm
Enclosure

1GGN

Jacksonville Field Office
621 N. Davis St., Bldg. A, Suite 116
Jacksonville, FL 32209
Phone:(904) 798-4201; Fax:(904) 359-6064
AHCA.MyFlorida.com

Facebook.com/AHCAFlorida
X.com/AHCA_FL/HCA_FL

STATEMENT OF DEFICIENCIES AND PLAN OF CORRECTION	(X1) PROVIDER/SUPPLIER/CLIA IDENTIFICATION NUMBER:	(X2) MULTIPLE CONSTRUCTION	(X3) DATE SURVEY COMPLETED
	AL11969778	A. BUILDING: _____ B. WING _____	04/25/2025

NAME OF PROVIDER OR SUPPLIER	STREET ADDRESS, CITY, STATE, ZIP CODE
THERAPEUTIC ASSISTED LIVING CORP	25 LYNDENHURST LN PALM COAST, FL 32137

(X4) ID PREFIX TAG	SUMMARY STATEMENT OF DEFICIENCIES (EACH DEFICIENCY MUST BE PRECEDED BY FULL REGULATORY OR LSC IDENTIFYING INFORMATION)	ID PREFIX TAG	PROVIDER'S PLAN OF CORRECTION (EACH CORRECTIVE ACTION SHOULD BE CROSS-REFERENCED TO THE APPROPRIATE DEFICIENCY)	(X5) COMPLETE DATE
A 000	Initial Comments An abbreviated relicensure survey with limited mental health monitoring was conducted at Therapeutic Assisted Living Corp on 04/25/2025. Deficient practice was not identified at the time of the survey.	A 000		

RON DESANTIS
GOVERNOR

JASON WEIDA
SECRETARY

November 13, 2023

Latasha Rowell
Therapeutic Assisted Living Corp
25 Lyndenhurst Ln
Palm Coast, FL 32137

Dear Ms. Rowell:

This letter reports findings of a state licensure survey that was conducted on November 8-13, 2023 by representatives of this office. Attached is the provider's copy of the State (3020) Form, which indicates there were no discernible deficiencies noted on the date of the survey.

The Quality Assurance Questionnaire has long been employed to obtain your feedback following survey activity. This form has been placed on the Agency's website at http://ahca.myflorida.com/Publications/Forms.shtml as a first step in providing a web-based interactive consumer satisfaction survey system. You may access the questionnaire through the link under Health Facilities and Providers on this page. Your feedback is encouraged and valued, as our goal is to ensure the professional and consistent application of the survey process.

Thank you for the assistance provided to the surveyor. Should you have any questions please call the office at (904) 798-4201.

Sincerely,

Amanda Wisehart

Amanda Wisehart
Health Facility Evaluator Supervisor

AW/rb
Enclosure

1GGN

Jacksonville Field Office
921 N. Davis St., Bldg. A, Suite 115
Jacksonville, FL 32209
Phone:(904) 798-4201; Fax:(904) 359-6054
AHCA.MyFlorida.com

Facebook.com/AHCAFlorida
Youtube.com/AHCAFlorida
Twitter.com/AHCA_FL
SlideShare.net/AHCAFlorida

PRINTED: 11/7/2023
FORM APPROVED

(X1) PROVIDER/SUPPLIER/CLIA IDENTIFICATION NUMBER:	(X2) MULTIPLE CONSTRUCTION	(X3) DATE SURVEY COMPLETED
[redacted]	A. BUILDING _____ B. WING _____	11/03/2023

NAME OF PROVIDER OR SUPPLIER	STREET ADDRESS, CITY, STATE, ZIP CODE
[redacted] ASSISTED LIVING CORP	35 LIVINGSTON LN PALM COAST, FL 32137

(X4) ID PREFIX TAG	SUMMARY STATEMENT OF DEFICIENCIES (EACH DEFICIENCY MUST BE PRECEDED BY FULL REGULATORY OR LSC IDENTIFYING INFORMATION)	ID PREFIX TAG	PROVIDER PLAN OF CORRECTION (EACH CORRECTIVE ACTION SHOULD BE CROSS-REFERENCED TO THE APPROPRIATE DEFICIENCY)	(X5) COMPLETE DATE
A [redacted]	[redacted] Comments A [redacted] survey with Limited Mental Health monitoring was conducted at Therapeutic Assisted Living Corp from 11/0/2023 to 11/7/2023. The facility had no deficiencies at the time of this investigation.	A 000		

RON DESANTIS
GOVERNOR

October 15, 2020

Latasha Gilyard
Therapeutic Assisted Living Corp
25 Lyndenhurst Lane
Palm Coast, FL 32137

Dear Latasha Gilyard:

This letter reports the findings of an initial Licensure survey conducted on October 8, 2020 by a representative of this office. Attached is the provider's copy of the State (3020) Form, which indicates there were no deficiencies noted on the date of the survey.

The *Quality Assurance Questionnaire* has long been employed to obtain your feedback following survey activity. This form has been placed on the Agency's website at http://ahca.myflorida.com/Publications/Forms.shtml as a first step in providing a web-based interactive consumer satisfaction survey system. You may access the questionnaire through the link under **Health Facilities and Providers** on this page. Your feedback is encouraged and valued, as our goal is to ensure the professional and consistent application of the survey process.

Thank you for the assistance provided to the surveyor. Should you have any questions please call this office at (904) 798-4201.

Sincerely,

amanda wisehart

Amanda Wisehart
Health Facility Evaluator Supervisor
Division of Health Quality Assurance

LL/AW/sm
Enclosure

34IJ

Jacksonville Field Office
921 N. Davis St., Bldg. A, Suite 115
Jacksonville, FL 32209
Phone:(904) 798-4201; Fax:(904) 359-6054
AHCA.MyFlorida.com

Facebook.com/AHCAFlorida
Youtube.com/AHCAFlorida
Twitter.com/AHCA_FL
SlideShare.net/AHCAFlorida

SUBMITTAL LETTER / FIRM PROFILE

RFP 26-RFP-022
Operation and Program Administration of the Flagler County Adult Day Care at the David I. Siegel Center

Submitted by: Therapeutic Assisted Living Corp.
Authorized Representative: LaTasha Rowell, Owner/Administrator
Business Address: 25 Lyndenhurst Lane, Palm Coast, Florida 32137
Date: August 22, 2026

Flagler County Board of County Commissioners
Office of Procurement and Contracts
1769 E. Moody Blvd., Building 2
Bunnell, Florida 32110

Re: RFP 26-RFP-022 – Operation and Program Administration of the Flagler County Adult Day Care at the David I. Siegel Center

Therapeutic Assisted Living Corp. respectfully submits this Submittal Letter and Firm Profile in response to RFP 26-RFP-022. Our organization is a locally established senior-care provider based in Palm Coast, Florida, with experience in licensed residential assisted living, therapeutic support, direct care, regulatory compliance, care coordination, family communication, and administration of services for older adults and other vulnerable populations. We understand that Flagler County is seeking a qualified provider to assume full operational, programmatic, and financial responsibility for the David I. Siegel Adult Day Care Center and to operate the program as a sustainable community-based service.

Therapeutic Assisted Living Corp. is prepared to bring a person-centered, therapeutic, community-focused model to the Center, with emphasis on participant safety, meaningful engagement, caregiver support, dementia-informed services, regulatory compliance, local workforce development, and long-term fiscal sustainability. The following firm profile is organized to address Items A through J required under Section 7.2 of the solicitation.

A. Brief History of the Business

Therapeutic Assisted Living Corp. is a Palm Coast-based senior-care organization established to provide compassionate, structured, person-centered support in a home-like environment. The organization has been operated and administered by LaTasha Rowell and has provided licensed assisted living services in Flagler County since 2020. Since opening, Therapeutic Assisted Living Corp. has maintained a deficiency-free survey record through the present, reflecting Management's commitment to regulatory compliance, quality assurance, resident safety, documentation, and consistent operational oversight. Its operating model emphasizes individualized care, therapeutic engagement, nutrition, activities of daily living support, medication-related assistance within licensed scope, family communication, and coordination with outside healthcare providers. Management brings more than 20 years of healthcare experience spanning direct patient care, rehabilitation, home health, and senior-care operations. The organization has developed its services with a focus on dignity, safety, accountability, and strong relationships with residents, families, healthcare partners, and the local community.

B. Organizational Structure of the Business

Therapeutic Assisted Living Corp. operates with a direct management structure designed for clear accountability and responsive decision-making. LaTasha Rowell serves as President and Owner/Administrator of Therapeutic Assisted Living Corp. and provides executive oversight, regulatory coordination, financial management, personnel supervision, quality assurance, and community relations. Program operations are supported by credentialed direct-care personnel and administrative support. For the David I. Siegel Adult Day Care Center, the proposed structure includes an Administrator/Center Director, direct-care staff, licensed nursing coverage through RN/LPN personnel as required, activity/program support, and additional support positions as census and program needs expand. The organization will maintain clear lines of authority, documented job descriptions, staff training records, and an organizational chart for the program.

C. Legal Entity

Therapeutic Assisted Living Corp. is an established Florida corporation and operates under an S corporation tax election. The firm is registered with the Florida Department of State, Division of Corporations. Documentation confirming the corporation's legal entity status and active Florida registration is included with the proposal materials. Therapeutic Assisted Living Corp. will be the contracting entity responsible for performance of services under any resulting agreement.

D. Florida Department of State / Sunbiz Registration

Therapeutic Assisted Living Corp. is registered with the Florida Department of State, Division of Corporations, and maintains an active Sunbiz record. A current Sunbiz report/certificate is included in the proposal submission as supporting documentation.

E. Ownership Interests

Therapeutic Assisted Living Corp. is locally owned and managed. LaTasha Rowell serves as Owner/Administrator and is the principal responsible for the organization's strategic direction, operations, compliance, staffing, and

financial oversight. Any ownership information required for licensing, background screening, contracting, or disclosure purposes will be provided to Flagler County and the appropriate regulatory agencies.

F. Active Business Venues

Therapeutic Assisted Living Corp. currently conducts business in Palm Coast and Flagler County, Florida. Its present operations are centered on senior-care services and community-based healthcare support within the local area. The proposed David I. Siegel Adult Day Care Center operation would expand the firm's service platform within Flagler County while preserving a local focus and strengthening access to adult day care, caregiver respite, therapeutic programming, and dementia-informed services for area residents.

G. Present Status and Projected Direction of the Business

Therapeutic Assisted Living Corp. is an active senior-care organization positioned for measured growth. The firm's present direction is to expand from its existing residential assisted living experience into broader community-based senior services through operation of the David I. Siegel Adult Day Care Center. The organization is also an active Florida Medicaid provider and currently maintains managed-care relationships with Sunshine Health, Florida Community Care, UnitedHealthcare, and Humana, providing an established foundation for payer-network continuity and third-party reimbursement development for the proposed program. The projected direction includes development of a sustainable adult day care program supported by private-pay revenue, Medicaid and other third-party reimbursement, applicable public program referrals, community partnerships, and disciplined cost management. Therapeutic Assisted Living Corp. has executed a workforce-development agreement with CareerSource Brevard Flagler Volusia and is actively participating in CareerSource workforce-development programs. These workforce resources include On-the-Job Training (OJT), Employ Florida recruitment, NextGen/Young Adult internship opportunities, and veteran-focused employment opportunities available through CareerSource. Therapeutic Assisted Living Corp. intends to use these established workforce resources to create additional local job opportunities, recruit and train Flagler County residents, support veterans seeking employment, develop healthcare career pathways, and contribute to continued community and economic development in Flagler County.

H. Overall Qualifications of the Business

Therapeutic Assisted Living Corp. offers a combination of local presence, licensed senior-care operations, healthcare experience, compliance knowledge, therapeutic programming experience, and hands-on administration that is directly relevant to the scope of this RFP. The organization has experience with activities of daily living support, medication-related services within licensed scope, nutrition and meal service, dementia and Alzheimer's-related care, family and provider communication, staffing oversight, emergency preparedness, documentation, quality assurance, and AHCA compliance. Therapeutic Assisted Living Corp. has maintained a deficiency-free ALF survey record from opening through the present, providing a demonstrated record of consistent regulatory performance. Therapeutic Assisted Living Corp. also holds a Limited Mental Health (LMH) specialty license for its assisted living operation. This specialty licensure requires additional mental-health-related training and compliance responsibilities and strengthens the organization's experience supporting individuals with mental health needs within the permitted scope of Florida assisted living services. The LMH specialty complements the organization's dementia-informed, person-centered approach and demonstrates additional regulatory and staff-training capacity relevant to vulnerable adult populations. Therapeutic Assisted Living Corp. has also earned five-star Google reviews from residents, families, and community stakeholders, reflecting positive experiences with the organization's quality of care, cleanliness, communication, compassion, and home-like environment. Supporting five-star Google review documentation and letters of recommendation are provided in the Past Performance / References section of the response. Therapeutic Assisted Living Corp. is also an active Florida Medicaid provider and currently has contractual relationships with Sunshine Health, Florida Community Care, UnitedHealthcare, and Humana. These payer relationships are directly relevant to the County's Medicaid managed-care continuity requirements and strengthen the firm's readiness to support credentialing, billing, and reimbursement processes for eligible adult day care participants. Management is familiar with Florida healthcare licensing expectations and the importance of maintaining accurate records, trained personnel, safe operations, and person-centered plans of care. The organization's small, locally managed structure supports responsive oversight and direct accountability. The firm also has access to documented working capital, financing capacity, insurance support, and workforce-development resources to support transition and operations. The firm's identified project personnel are Flagler County residents, and Therapeutic Assisted Living Corp.'s executed CareerSource workforce-development agreement further strengthens its ability to recruit, train, and retain local workers as program census grows. Therapeutic Assisted Living Corp. is prepared to operate the Center as a self-sustaining business unit and understands that Flagler County will not provide direct operating subsidies.

I. Qualifications of Employees Assigned to the Contract

The proposed team combines administration, healthcare, direct-care, marketing, community outreach, and support experience. All personnel identified in this proposal are local Flagler County residents, reinforcing Therapeutic Assisted Living Corp.'s commitment to maintaining employment, healthcare expertise, and economic participation within the community it serves. LaTasha Rowell will provide executive and administrative oversight and brings extensive healthcare experience, assisted living administration, rehabilitation and direct-care background, regulatory knowledge, staff supervision, quality assurance, and community relationship management. She also currently holds an active Physical Therapist Assistant license, adding clinical knowledge of functional mobility, therapeutic activity, rehabilitation principles, safety, and support for maintaining independence. This credential strengthens the proposed team's therapeutic perspective without representing that physical therapy services will be furnished outside the applicable scope, referral, or supervision requirements. Treyvian Williams currently holds a full-time position with Therapeutic Assisted Living Corp. and brings administrative and Certified Nursing Assistant credentials to the proposed team. Deon Nelson is included as direct-care staff and holds Certified Nursing Assistant credentials, CPR certification, and experience supporting residents with daily care, activities, meals, housekeeping, safety, and family communication. Deon is also currently enrolled in nursing studies at Daytona State College, demonstrating continued professional development within the healthcare workforce. Donald Rowell is included in the proposal team with administrative credentials and current healthcare marketing experience. He currently

provides marketing and community-outreach support for Grand Oaks and for an Aviata healthcare facility in the Daytona, Florida area. His experience includes relationship development, referral-source outreach, healthcare marketing, and community visibility, which will support participant census development and community engagement for the David I. Siegel Adult Day Care Center. Additional licensed nursing personnel, including RN/LPN coverage, will be utilized in accordance with the RFP, AHCA requirements, participant needs, and census. Resumes, licenses, and applicable certifications for proposed personnel are included in the Firm/Employee Qualifications section of the proposal. Any newly hired positions required for the project will be recruited based on documented job descriptions and required qualifications, with an emphasis on local Flagler County recruitment through Therapeutic Assisted Living Corp.'s active CareerSource workforce-development partnership.

J. Lawsuits, Contract Non-Performance, and Failure to Complete Work

Therapeutic Assisted Living Corp., its officers, proposed team members, and subconsultants have not been involved in any lawsuits related to company contracts or other company business during the preceding five (5) years. In addition, Therapeutic Assisted Living Corp., its officers, proposed team members, and subconsultants have not failed to complete any contract during the preceding five (5) years, and no officer or partner of the proposed team has failed to complete a contract handled in his or her name during that period.

Closing Statement

Therapeutic Assisted Living Corp. appreciates the opportunity to submit its qualifications to Flagler County. The firm is committed to maintaining continuity of care at the David I. Siegel Adult Day Care Center, creating local employment opportunities, supporting caregivers and participants, and operating the program with the professionalism, fiscal accountability, regulatory discipline, and community-centered service required for long-term sustainability. We welcome the opportunity to serve Flagler County through this important community resource.

Respectfully submitted,

LaTasha Rowell, Administrator 8/22/2026.

LaTasha Rowell
Owner/Administrator
Therapeutic Assisted Living Corp.

LATASHA ROWELL

Owner & Administrator | Assisted Living Operations | Physical Therapist Assistant | Healthcare & Rehabilitation

Palm Coast, Florida 32137 | 904-501-8991 | latashagilyard@gmail.com

PROFESSIONAL SUMMARY

Experienced healthcare professional, Assisted Living Facility Administrator, business owner, and Physical Therapist Assistant with more than 20 years of progressive experience spanning direct patient care, rehabilitation, home health, clinical coordination, assisted living administration, and healthcare business operations. Owner and Administrator of Therapeutic Assisted Living Corp. since 2020, with documented training in Alzheimer's disease and related disorders, assisted living administration, Extended Congregate Care, Limited Mental Health, rehabilitation, resident safety, and person-centered support. Combines hands-on clinical experience with healthcare administration and business leadership to promote individualized care, therapeutic engagement, dignity, independence, safety, and whole-person well-being.

CORE COMPETENCIES

- Assisted Living Administration
- Healthcare Operations Management
- Resident-Centered Care
- Alzheimer's & Dementia Care
- Physical Therapy & Rehabilitation
- Therapeutic Exercise & Activities
- Activities of Daily Living
- Patient & Caregiver Education
- Staff Leadership & Supervision
- Regulatory Compliance
- AHCA/F.A.C. Compliance
- Quality Assurance
- Resident Advocacy
- Family & Community Relations
- Interdisciplinary Collaboration
- Medication Assistance Oversight
- Documentation & Record Management
- Emergency & Disaster Preparedness
- Infection Prevention & Safety
- Behavioral & Psychosocial Support
- Business Development
- Marketing & Networking
- Billing & Payroll
- Vendor Coordination
- Community Partnerships
- Government & Community Engagement

PROFESSIONAL EXPERIENCE

THERAPEUTIC ASSISTED LIVING CORP. — Palm Coast, Florida

OWNER, LIAISON & ADMINISTRATOR | 2020 – Present

- Provide executive leadership and operational oversight for a Florida-licensed assisted living organization focused on therapeutic engagement, compassionate care, resident dignity, safety, and whole-person well-being.
- Direct daily operations including resident services, staffing, scheduling, workflow, supplies, inventory, billing, payroll entry, accounts, appointments, documentation, customer service, and vendor coordination.
- Develop and implement policies, procedures, forms, training systems, emergency preparedness processes, visitation procedures, medication-assistance documentation, and quality-assurance practices.
- Maintain working knowledge of Florida assisted living regulations and Agency for Health Care Administration requirements, including specialized Extended Congregate Care and Limited Mental Health policies and procedures.
- Lead individualized resident-centered care and advocate for safety, dignity, independence, functional ability, and quality of life.

- Coordinate with physicians, nurses, therapists, hospice providers, families, caregivers, pharmacies, and other third-party service providers.
- Apply rehabilitation knowledge to mobility, positioning, functional independence, fall prevention, activities of daily living, and safe care practices.
- Recruit, orient, train, supervise, schedule, coach, and support staff while promoting accountability, professionalism, compassion, and teamwork.
- Develop marketing and networking strategies to maintain and increase census; build relationships with families, healthcare professionals, community organizations, and service providers.
- Represent Therapeutic Assisted Living in community and governmental discussions regarding senior care, adult day services, and community-based programs.
- Maintain professional involvement with the Florida Assisted Living Association.

PALM GARDEN REHABILITATION OF GAINESVILLE — Gainesville, Florida

PHYSICAL THERAPIST ASSISTANT | 2017 – 2021

- Provided physical therapy services across outpatient rehabilitation, inpatient rehabilitation, and home health settings under the direction of the supervising Physical Therapist.
- Performed therapeutic exercise, therapeutic activities, functional training, physical agents, modalities, mobility interventions, and patient/caregiver education.
- Monitored patient response to treatment and communicated favorable or unfavorable reactions to the supervising therapist.
- Supervised rehabilitation assistants and supported effective clinical workflow.
- Maintained accurate and timely documentation using Casamba and Rehab Optima; participated in weekly case conferences.
- Maintained equipment sanitation, patient safety, productivity, and ethical/legal standards.

TERRACE HEALTH & REHABILITATION — Gainesville, Florida

PHYSICAL THERAPIST ASSISTANT | 2015 – 2017

- Provided physical therapy treatments under the direction of the supervising Physical Therapist.
- Performed therapeutic exercises, therapeutic activities, functional mobility interventions, patient education, and safety training.
- Monitored patient response, communicated changes, supervised rehabilitation assistants, maintained documentation, and participated in case conferences.
- Maintained equipment sanitation, productivity, and professional standards.

SELECT REHAB — Palatka, Florida

PHYSICAL THERAPIST ASSISTANT — PRN | 2015 – Present

- Provide therapy services under the direction of the supervising Physical Therapist, including therapeutic exercise, functional activities, mobility training, and patient education.
- Monitor patient response, support rehabilitation team coordination, maintain documentation, participate in case conferences, and maintain safety and sanitation standards.
- Licensure status: Currently non-active.

SELF-EMPLOYED — Palatka, Florida

HOME HEALTH AIDE / CAREGIVER | 2013 – 2015

- Provided individualized private-duty care in home settings, including ADLs, personal hygiene, dressing, wheelchair and bed mobility, transfers, positioning, passive range of motion, vital-sign monitoring, skin-integrity checks, and caregiver education.
- Assisted with self-administered medications within the appropriate scope and promoted safety, comfort, dignity, and independence.

COMMUNITY HOME HEALTH — St. Augustine, Florida
CLINICAL INTAKE COORDINATOR* | *2010 – 2013

- Coordinated intake activities for new home-health admissions; verified insurance and assembled medical records.
- Performed accurate data entry, managed office and medical supplies, responded to multi-line telephone needs, and participated in clinician case conferences.
- Used Microsoft Word, Excel, PowerPoint, email, Internet, and office technology.

COMMUNITY HOME HEALTH — St. Augustine, Florida
CLINICAL TEAM ASSISTANT* | *2008 – 2010

- Supported the clinical team under the clinical nurse supervisor; maintained patient tracking logs and organized physician orders.
- Performed accurate payroll entry, maintained filing systems and documentation, and supported daily clinical workflow.

CERTIFIED NURSING ASSISTANT / PRIVATE DUTY CAREGIVER
1999 – 2015

- Provided direct patient care including bathing, toileting, dressing, transfers, mobility, personal care, vital-sign monitoring, and daily skin checks.
- Reported changes in condition and promoted dignity, safety, comfort, and independence.

EDUCATION

KEISER UNIVERSITY — Jacksonville, Florida
Associate Degree — Physical Therapist Assistant* | *2015

MY ALF TRAINING
Assisted Living & Long-Term Care Training; Marketing Consulting Training* | *2019

FIRST COAST TECHNICAL COLLEGE — Palatka, Florida
Certificate — Medical Administrative Assistant* | *2006

ST. JOHNS COMMUNITY COLLEGE — Palatka, Florida
Certificate — Certified Nursing Assistant* | *1999

PROFESSIONAL CERTIFICATIONS & SPECIALIZED TRAINING

- Assisted Living Facility Administrator Certification
- Assisted Living Core Competency Certification
- Alzheimer's Disease & Related Disorders Training — FL 3-Hour Initial Training, Part 1 | 3 Credit Hours | Completed November 21, 2023 | Department of Elder Affairs approved
- Alzheimer's Disease Level 1 | 4 Credit Hours | Completed March 24, 2025 | Department of Elder Affairs approved
- Extended Congregate Care (ECC) Specialty Training
- Limited Mental Health (LMH) Specialty Training
- Certified Nursing Assistant (CNA)
- Physical Therapist Assistant — Clinical & Professional Training
- CPR
- HIPAA
- OSHA Bloodborne Pathogens
- HIV Training
- Assisted Living & Long-Term Care Training

- Alzheimer's/dementia subject matter: behavior management and challenging behaviors; promoting independence with ADLs; dressing, grooming, eating, bathing and toileting; family support and involvement; resident activities; appropriate physical environment; security and safety; routines and schedules; ethics, autonomy, and person-centered care.
- Additional continuing education in resident safety, infection prevention, documentation, communication, caregiver education, functional mobility, fall prevention, therapeutic engagement, and quality care practices.

BUSINESS RECOGNITION & COMMUNITY DISTINCTIONS

- 2024 - Best Business Rated, Palm Coast, Florida - Therapeutic Assisted Living Corp.
- 2026 - Top 3 Business Rated, Palm Coast, Florida - Therapeutic Assisted Living Corp.
- 2026 - Selected for inclusion as a Top Health Executive by Global Who's Who Online, recognizing Latasha Rowell in her role as ALF Administrator of Therapeutic Assisted Living Corp.
- 2026 - Therapeutic Assisted Living Corp. identified for inclusion as a Top Health Service Organization representing Palm Coast, Florida by Global Who's Who Online.
- Maintains strong five-star resident, family, and customer feedback reflecting a commitment to compassionate service, quality care, and positive community relationships.

PROFESSIONAL & COMMUNITY LEADERSHIP

- Florida Assisted Living Association — Active membership and professional participation.

PROFESSIONAL VALUE PROPOSITION

Latasha Rowell brings an uncommon combination of clinical care experience, rehabilitation expertise, healthcare administration, business ownership, and community leadership. Her progression from Certified Nursing Assistant to medical administration, home health, Physical Therapist Assistant, and ultimately Owner/Administrator demonstrates both front-line healthcare knowledge and executive operational leadership. This combination supports strong oversight of regulated healthcare services, staff, resident and family relations, quality assurance, compliance, community partnerships, and government/community programs.

REFERENCES

Available upon request.

Treyvian Artrez Williams

Palm Coast, Florida
386-264-3716 • Trey21154@gmail.com

PROFESSIONAL SUMMARY

Dedicated Assisted Living Facility Administrator with hands-on experience managing daily operations, supervising staff, and providing compassionate resident-centered care in a therapeutic assisted living environment. Skilled in resident care coordination, medication management oversight, staff leadership, and maintaining compliance with Florida assisted living regulations. Strong background in elderly care with years of experience working within assisted living facilities and supporting residents' health, safety, and quality of life.

LICENSES & CERTIFICATIONS

- Florida Assisted Living Facility Administrator License
- Certified Nursing Assistant (CNA) License
- Medication Technician (Med Tech) License

PROFESSIONAL EXPERIENCE

Administrator — Therapeutic Assisted Living

Palm Coast, Florida | 2022 – Present

- Manage daily operations of a therapeutic assisted living facility serving 6 residents
- Supervise and lead a team of 4 employees to ensure quality resident care
- Coordinate resident care plans, medication assistance oversight, and daily living support
- Maintain resident documentation, incident reports, and operational records
- Ensure compliance with Florida assisted living regulations and facility standards

- Communicate with residents' families, healthcare providers, pharmacies, and hospice staff
- Assist with staffing schedules, daily operations, and resident safety procedures
- Foster a compassionate and supportive environment focused on resident well-being and dignity

---

CORE SKILLS

- Assisted Living Administration
- Resident Care Coordination
- Staff Supervision & Leadership
- Medication Assistance Oversight
- Dementia & Elderly Care
- Florida ALF Compliance
- Resident Documentation
- Team Management
- Scheduling & Operations
- Family & Healthcare Communication
- Safety & Emergency Procedures
- Compassionate Patient Care

EDUCATION

High School Diploma

ADDITIONAL EXPERIENCE

Extensive background working in assisted living environments with experience supporting elderly residents, assisting with activities of daily living, and maintaining compassionate, high-quality care standards.

Certificate of Achievement

Conferred to:

Treyvian A. Williams

For obtaining a passing score on the

ASSISTED LIVING FACILITY CORE COMPETENCY TEST

Certification #: 171246268

Presented by

The MacDonald Research Institute Testing Office
10441 Quality Drive, Suite 206, Spring Hill, FL 34609

Kimberly Smoak

Kimberly Smoak, Deputy Secretary
for Health Quality Assurance
Agency for Health Care Administration

TMRI

The MacDonald Research Institute

December 5, 2025

Date

DON ROWELL

Palm Coast, FL | (386) 631-2282 | donrow007@icloud.com

PROFESSIONAL SUMMARY

Business development and relationship management leader with a demonstrated track record of driving census growth, executing facility turnarounds, and managing multi-site skilled nursing operations. Experienced in improving occupancy stability, expanding referral networks, and optimizing payer mix within post-acute healthcare environments.

Delivered measurable performance gains including increasing census from sub-60% to full occupancy, contributing to multi-million-dollar annualized facility revenue impact, and establishing sustainable referral pipelines across hospitals, physicians, case managers, and post-acute partners. Background in enterprise financial services account management and luxury automotive sales, reinforcing strengths in consultative selling, executive relationship development, and revenue generation.

CORE COMPETENCIES

- Regional Business Development Strategy
- Skilled Nursing Census Growth & Turnaround
- Healthcare Referral Network Development
- Revenue Growth & Payer Mix Optimization
- Multi-Site Operations & Performance Management
- Hospital & Post-Acute Relationship Management
- Consultative & Solution-Based Selling
- Contract Negotiation & Account Retention
- Executive & C-Suite Relationship Management
- Financial Services & Enterprise Account Growth

PROFESSIONAL EXPERIENCE

Aviata Health Group

Healthcare Liaison / Business Development | 2023 – Present

Drive census growth strategy and business development across two skilled nursing facilities totaling 180 beds, with direct responsibility for occupancy performance, referral development, and revenue stabilization.

- Led full census turnaround in a 120-bed facility, increasing occupancy from **58% to 100% within 4 months** through aggressive referral development and market expansion initiatives.
- Contributed to **$26M+ annualized facility revenue impact (estimated based on census performance and payer mix optimization)** through sustained occupancy growth and admissions strategy execution.
- Stabilized census across multi-site operations, improving occupancy consistency and long-term financial predictability.
- Expanded referral pipeline through strategic relationships with hospitals, physicians, case managers, discharge planners, and assisted living communities.
- Strengthened Medicare and Managed Medicare skilled mix to improve reimbursement quality and overall payer performance.
- Served as primary liaison between referral sources, families, clinical teams, and admissions departments to ensure appropriate placement and smooth transitions of care.
- Executed targeted market outreach, presentations, and partnership development initiatives to increase facility visibility and admissions flow.
- Partnered with clinical leadership to align patient flow, level-of-care decisions, and admission appropriateness criteria.

Mercedes-Benz of Daytona Beach

Luxury Automotive Sales Consultant | 2017– 2023

Delivered high-volume, consultative luxury vehicle sales in a performance-driven dealership environment focused on customer experience, retention, and revenue growth.

- Averaged **17 vehicle sales per month**, consistently ranking among top-performing sales consultants.
- Recognized as **Salesperson of the Month** for performance excellence and customer satisfaction.
- Managed full-cycle luxury sales process from prospecting and qualification through negotiation and closing.
- Built a strong referral-based pipeline through long-term client relationships and repeat business development.
- Partnered with finance and management teams to ensure seamless transaction execution and customer experience delivery.

First Data Corporation (now Fiserv)

Mid-Market Relationship Manager | 2010–2016

Managed a portfolio of mid-market business clients providing payment processing and financial technology solutions, focusing on retention, expansion revenue, and strategic account growth.

- Managed **150+ mid-market client portfolio generating $55M+ annual recurring revenue**.
- Increased portfolio revenue by **18% year-over-year** through strategic account planning and solution expansion.
- Maintained **90%+ client retention rate** through proactive relationship management and issue resolution.
- Served as trusted advisor to business owners and C-suite executives on payment infrastructure optimization and operational efficiency.
- Conducted quarterly business reviews to identify growth opportunities, cost savings, and system enhancements.
- Recognized as a top regional performer for revenue growth and client satisfaction metrics.

CAREER HIGHLIGHTS

- Increased skilled nursing occupancy from **58% → 100% in 4 months**
- Managed **180-bed multi-site healthcare operations portfolio**
- Generated **$26M+ annualized facility revenue impact (estimated)**
- Oversaw **$55M+ annual recurring revenue portfolio (Fiserv)**
- Consistently delivered **17+ luxury vehicle sales/month average**
- Achieved **18% YoY revenue growth in financial services portfolio**

Military Service

- **U.S. Army Sergeant (E-5) – Honorably Discharged**
- **Tactical Microwave/Satellite Systems Operator**
- **Personnel Administrative Specialist**

AGENCY FOR HEALTH CARE ADMINISTRATION

ASSISTED LIVING FACILITY
CORE TRAINING PROGRAM CERTIFICATION

Donald Rowell

Certification #: 171244476 Issued: July 15, 2023

The person named herein has successfully completed the Assisted Living Facility Core Training Program and has met the requirement of Florida Statute 429.52(3).

TMRI
The MacDonald Research Institute

MQA Online Services

Logged in as ***Rowell, Latasha Dion***

Update Account | Logoff | Contact Us

My Dashboard

Don't Delay, Get Screened today!

Effective July 1, 2025, HB 975 requires that all health care practitioners undergo a fingerprint-based background screening as a requirement for obtaining licensure. If you are renewing your license with the Department, you must have a screening completed for your renewal application to be processed. For detailed information, including frequently asked questions, visit https://flhealthsource.gov/backgroundscreening/. Exceptions to this requirement: Emergency Medical Technician, Paramedic, Radiological Technician, Pharmacy Interns, and Registered Pharmacy Technicians.

Important information about your dashboard:

- To download a copy of your e-License, please navigate to the **"Licensure Documents"** menu located within the **"Additional Activities"** section below.
- When your profession opens for renewal a **"Renew My License"** option will become available no later than 90 days prior to your license expiration date. If you do not see the **"Renew My License"** option, please check back later.
- If you are trying to **reactivate from an inactive or a retired status**, this cannot be completed online unless you are eligible to reactivate your inactive license during a public health emergency pursuant to s. 381.00315(1)(c)3., Florida Statutes. Please contact your board office for more information.
- If your profession is not in renewal and you need a duplicate license, to request a name change or perform any other license maintenance activity, please choose your option under **"Manage My License"**.
- If you have not yet added your license to your account, you can do this by selecting the **"Add My License or Previous Application"** option under the **"Additional Activities"** section below.

To begin, choose an option then hit the **"Select"** button. You will return to this dashboard after you have finished.

License Information Hide Details

License Number:	**#26036**
License Type:	**Physical Therapist Assistant**
License Status:	**Clear**
License Expiry:	**11/30/2027**
Address:	**25 LYNDENHURST LN PALM COAST FL 32137**
Phone:	**904-501-8991**

Manage My License

Physical Therapist Assistant #26036 | Choose an Application | Select

My Application

To start a new application or resume a previously saved application.

CERTIFICATE of ACHIEVEMENT

Conferred to:

Latasha D. Gilyard

For obtaining a passing score on the

ASSISTED LIVING FACILITY CORE COMPETENCY TEST

Certification #: ***171241826***

Presented by

The MacDonald Research Institute Testing Office
28953 SR 54, Wesley Chapel, FL 33543

TMRI

The MacDonald Research Institute

Mary C. Mayhew, Secretary
Agency for Health Care Administration

December 14, 2019

Date

DEON NELSON

Palm Coast, FL 32164

deonnelson386@gmail.com | (386) 882-7543

PROFESSIONAL SUMMARY

Dedicated and compassionate Certified Nursing Assistant (CNA) and CPR-certified professional with hands-on experience in assisted living and healthcare support settings. Skilled in providing direct patient care, assisting with activities of daily living, monitoring resident conditions, and supporting clinical care teams. Strong commitment to patient safety, dignity, comfort, and quality care. Dependable team member with effective communication skills and the ability to work in fast-paced healthcare environments. Trained in dementia and Alzheimer's care support, with a focus on patient-centered communication and behavioral understanding.

PROFESSIONAL EXPERIENCE

Certified Nursing Assistant

Therapeutic Assisted Living Corp. — Palm Coast, FL

November 2024 – Present

- Provide direct patient care to residents, including assistance with activities of daily living (ADLs) such as bathing, dressing, grooming, toileting, and mobility support.
- Support residents with dementia and Alzheimer's disease, using calm communication techniques, redirection strategies, and patient-centered care approaches.
- Monitor and support resident health status by observing and reporting changes in condition, behavior, or vital signs to appropriate clinical staff.

- Assist with patient safety measures, including fall prevention, proper transfers, and maintaining a safe care environment.
- Support individualized care plans while ensuring resident dignity, comfort, and emotional well-being.
- Assist with feeding and hydration support while following dietary needs and care instructions.
- Maintain infection control standards, sanitation procedures, and proper use of personal protective equipment (PPE).
- Communicate effectively with nurses, healthcare staff, residents, and families regarding patient needs and care updates.
- Document and report care activities in accordance with facility policies and healthcare guidelines.
- Contribute to a collaborative care team focused on delivering consistent, high-quality patient care.

Pharmacy Staff

One Pharmacy — Palm Coast, FL

August 2024 – Present

- Support healthcare operations in a pharmacy setting by assisting staff with daily workflow and patient service needs.
- Provide professional and respectful communication with patients regarding service-related inquiries.
- Maintain strict confidentiality and compliance with healthcare privacy standards (HIPAA).
- Assist with organizing medications, supplies, and maintaining an efficient clinical workspace.
- Support accurate handling of healthcare-related information under supervision.

- Contribute to a clean, organized, and safety-focused healthcare environment.
- Demonstrate attention to detail, reliability, and professionalism in a clinical support role.

Crew Member

Willie & Cathy's Mobile Detailing — Palatka, FL

June 2021 – August 2023

- Performed detailed cleaning and sanitation of vehicles and recreational units.
- Assisted with maintaining organized and safe work environments.
- Supported team operations to meet service quality and efficiency standards.
- Provided customer service and ensured client satisfaction during service completion.

EDUCATION

Daytona State College Nursing Student

Palm Coast, FL

Perquisites College Coursework

High School Diploma / GED

CERTIFICATIONS & LICENSES

- Certified Nursing Assistant (CNA)
- CPR Certified
- Valid Driver’s License

Medication Technician

CORE SKILLS

- Direct Patient Care (ADLs)
- Dementia & Alzheimer’s Care Support
- Resident Safety & Monitoring
- Behavioral Redirection & De-escalation Techniques
- Vital Signs Observation & Reporting
- Infection Control & PPE Use
- Care Plan Support
- Mobility & Transfer Assistance
- Compassionate Patient Care
- Healthcare Communication
- HIPAA Compliance & Confidentiality
- Team-Based Clinical Support
- Time Management & Reliability
- Attention to Detail
- Pharmacy & Healthcare Environment Support
- Customer & Patient Interaction

85 Cypress Point Parkway, Unit B | Palm Coast, Florida 32164
Tel: 386-447-8944 | joseph@one-pharmacy.com

June 19, 2026

Flagler County Board of Commissioners

Flagler County Administration

Bunnell, Florida 32110

RE: Letter of Support — Latasha Rowell, Administrator, Therapeutic Assisted Living Corp.

To Whom It May Concern:

It is without reservation and with the highest degree of professional confidence that I submit this letter in full support of Mrs. Latasha Rowell, Administrator of Therapeutic Assisted Living Corp., in her application for the Adult Day Care Center through the Flagler County public private partnership initiative. My recommendation reflects direct, firsthand experience earned through our collaborative work serving the senior population of Palm Coast and the surrounding community.

As the pharmacist and owner of One Pharmacy, I have had the privilege of working closely with Mrs. Rowell and her team at Therapeutic Assisted Living over an extended period. Our partnership has centered on one core value service with care: ensuring that every resident under her care receives safe, appropriate, and timely medication management. In my role, I have observed Mrs. Rowell not simply as an administrator, but as a genuine patient advocate who holds herself and her staff to the highest standards of care.

What sets Mrs. Rowell apart is not only her operational excellence, but the culture she has built within her homes. Her facilities are impeccably maintained ,among the most well kept I have encountered in my professional career. Residents medication management is well above CMS standards and compliance rates, an outcome that is not easy to achieve. It reflects Mrs. Rowell's consistent responsiveness, organization hierarchy, and proactive communication with our pharmacy team are the qualities that are essential for companies within this space.

Beyond the operational, Mrs. Rowell is a pillar of this community. She is known for her integrity, her warmth, and her genuine commitment to the quality of life and care of the seniors within her homes.

The working relationship we have built is founded on trust, and in healthcare, trust must be earned. Mrs. Rowell has earned it fully.

It is my firm belief that the attributes that have made Therapeutic Assisted Living a model facility will translate directly into the Adult Day Care Center. Her experience in programming for seniors, her understanding of regulatory requirements, and her track record of community partnership make her exceptionally qualified for this opportunity. The Palm Coast community would benefit enormously from the care and intentionality she will bring to this venture.

On behalf of the practitioner community we represent, I offer Mrs. Latasha Rowell the strongest possible recommendation. I am confident she will serve Flagler County with the same distinction she has demonstrated in every aspect of her work to date.

Please do not hesitate to contact me directly at 386-447-8944 or joseph@one-pharmacy.com should you require any additional information or wish to speak further about my experience with Mrs. Rowell.

Respectfully,

Dr. Joseph Shoyoye, PharmD
CEO & Pharmacy Owner
One Pharmacy
85 Cypress Point Parkway, Unit B
Palm Coast, Florida 32164
Tel: 386-447-8944
joseph@one-pharmacy.com

Representative Project No. 1

Project Title: Therapeutic Assisted Living Corp. – Senior Care Operations Including Adult Day Services
Location: Palm Coast, Florida
Owner/Operator: Therapeutic Assisted Living Corp.
Address: 25 Lyndenhurst Lane, Palm Coast, Florida 32137
Years Performed: 2020 – Present
Status: Ongoing
Project Cost: Privately funded ongoing senior-care operation

Brief Description

Therapeutic Assisted Living Corp. has continuously operated a licensed senior-care facility in Palm Coast, Florida since 2020. TAL is responsible for administration, staffing, supervision, therapeutic and recreational programming, meals and nutrition, medication assistance and coordination, family communication, healthcare-provider collaboration, emergency preparedness, regulatory compliance, quality assurance, and overall facility operations.

In addition to residential assisted living services, TAL has **direct experience providing adult day services to a nonresident participant within its licensed assisted living setting**. The participant attended during daytime hours and received supervision, meals, socialization, therapeutic and recreational activities, individualized support, family communication, and health-and-safety oversight alongside TAL's long-term residents.

Due to the size and capacity of TAL's residential operation, adult day participation was intentionally limited based upon available space, staffing, and the needs of existing residents.

Relevance to the David I. Siegel Adult Day Care Center

This project is directly relevant because TAL has practical experience providing both residential senior care and daytime services to a nonresident adult.

The experience required TAL to address many of the same fundamental responsibilities involved in dedicated adult day care operations, including:

- Participant supervision and safety;
- Daytime programming;
- Social and therapeutic engagement;
- Dementia and mental-health-related support;
- Nutrition and meal services;
- Family caregiver communication;
- Individualized assistance;
- Health monitoring;
- Staffing and scheduling;

- Documentation;
- Healthcare-provider coordination; and
- Continuity of care.

TAL does not represent that it has previously operated a separately licensed stand-alone adult day care center. The David I. Siegel Adult Day Care Center would represent an expansion of TAL's existing senior-care and adult day-services experience into a dedicated adult day care environment with greater participant capacity and community reach.

TAL will operate the Center in accordance with all licensing, staffing, programmatic, physical plant, safety, and regulatory requirements applicable to the facility.

gentiva
HOSPICE

06/17/2026

To Whom It May Concern,

I am pleased to provide this letter of recommendation for Therapeutic Assisted Living. It has been my privilege to collaborate professionally with the leadership and care team at this facility, and I have consistently been impressed by their commitment to excellence, compassion, and resident-centered care.

Throughout our professional collaboration, the staff at Therapeutic Assisted Living have demonstrated exceptional dedication to maintaining a safe, supportive, and welcoming environment for residents. Their approach emphasizes dignity, respect, and individualized care, ensuring that each resident's physical, emotional, and social needs are addressed with professionalism and sensitivity.

In addition to providing high-quality care, the facility has proven to be an outstanding collaborative partner. Communication between staff, healthcare providers, families, and community organizations is consistently clear, timely, and effective. Their willingness to work cooperatively, share information appropriately, and coordinate services contributes significantly to positive outcomes for residents and their families.

The leadership team fosters a culture of accountability, continuous improvement, and teamwork. During our professional interactions, I have found them to be responsive, knowledgeable, and committed to maintaining the highest standards of care and ethical practice. Their collaborative spirit makes them a trusted and valued partner within the healthcare and senior services community.

I confidently recommend Therapeutic Assisted Living to families seeking quality assisted living services and to organizations seeking a professional, reliable, and collaborative partner. I am confident that they will continue to provide exceptional care and maintain the strong professional relationships that have earned them an excellent reputation.

Sincerely,

Colleen Marino
Executive Director
Gentiva Hospice
386-597-6306
Colleen.Marino@gentivahs.com

REFERENCES

Agency #1	Gentiva Hospice
Address	145 City Pl Unit 200A
City, State, ZIP	Palm Coast FL. 32164
Contact Person	Colleen Marino
E-mail	Colleen.Marino@gentivahs.com Phone: 386-597-6306
Date(s) of Service	2020 – Currently serving Gentiva's patients.
Type of Service	Interdisciplinary senior-care coordination, hospice collaboration, family communication, and continuity of care.
Comments:	Professional healthcare partner familiar with T.A.L.'s senior-care operations, staff communication, quality standards, family coordination and collaborative care practices.
Agency #2	One Pharmacy.
Address	88 Cypress Point Parkway, Unit B
City, State, ZIP	Palm Coast, FL 32164
Contact Person	Dr. Joseph Shoyoye, PharmD, Owner
E-mail	josephG@onepharmacy.com Phone: 386-447-9844
Date(s) of Service	2021 – current
Type of Service	Pharmacy services, medication-management coordination, and healthcare collaboration
Comments:	Professional pharmacy partner familiar with T.A.L.'s medication management practices, communication, resident-care standards, compliance awareness, and overall professionalism.
Agency #3	Aviata at Grand Oaks
Address	3001 Palm Coast pkwy SE
City, State, ZIP	Palm Coast FL. 32137
Contact Person	Christofer McNair, AIT
E-mail	cmcnair@aviatang.com Phone: (386)442-6060
Date(s) of Service	2020 – Present
Type of Service	Senior-care collaboration, rehabilitation partner familiar with T.A.L.'s collaborative approach, communication, resident advocacy, professionalism, and continuity of care practices.
Comments:	collaboration with rehabilitation and transitions of care.

8/14/2026

To whom it may concern

My family has had the pleasure of working with Therapeutic Assisted Living regarding the care of our mother Susanne Clark. Our mother has been residing at Therapeutic Assisted Living for the past 5 1/2 months.

My mother's journey began 3 years ago with numerous falls that resulted in her breaking her arm 3 times requiring the placement of hardware with three surgeries and a fourth surgery because of developing cellulitis . She went from independent living and walking 4 miles a day to needing care with her activities of daily living,mobility and decision-making . She could no longer live at her home alone .

After numerous stays in a rehab facility to strengthen her arm and regain some mobility with assistance, she transferred to a large assisted living facility . As you can imagine, she became angry with her situation and was not happy with her living arrangements.

She continued to fall requiring hospitalization and ER visits for head lacerations, arm lacerations and concussions. During these many hospital visits and rehab stays my mother experienced episodes of humiliation and lack of empathy from caregivers who should know better. I've been a nurse for 25 years and I've never treated people the way I've seen my mother treated. Our elder population should be treated with dignity and respect.

As a family we tried to never leave my mother for any extended period of time over 24 hours. A simple task of cutting up her food and making sure she had clean and dry clothes seemed to be out of reach for some caregivers. We were constantly worried about her safety.She did not make good decisions and would try to do things for herself, which were not in her best interest and resulted in her falling and injuring herself.

This brings me to the present time. For the past 5 1/2 months that my mother has been living at Therapeutic Assisted Living she has been living her best life since her first fall .She is treated with respect and dignity. She has supervised activities that have helped her regain her strength and limited mobility. Mom actually enjoys the activities,she would not participate in any of them at the large assisted living. The small setting and encouragement she receives on a daily basis has made a world of difference.

Mom does suffer from dementia and sundowners has been a real issue with her. I have seen her change from being angry at the sundowner time to actually being more relaxed and engaging with the staff and other residents during her hardest times. It is a big change for her. The staff gives so much support during the difficult times they know how to redirect and my mother's angry episodes have not been in evidence for the past couple of months.

We are now able to have conversations again with mom she is not falling and suffering from concussions.She has not fallen in the 5 1/2 months that she has been in the care of Therapeutic Assisted Living.

The supervision she receives the guidance and loving care from the staff has changed her attitude from an angry,humiliated woman back to the mother that we always knew.
Mom actually participates with the other residents with exercises and games that help to maintain her physical strength and abilities.
Mom now has nutritious meals and snacks throughout the day with her food prepared and served in portions that she can eat and maintain good nutrition.The family style meals and sitting at a table with 4 to 5 other residents has increased her socialization and has actually instilled pride in the fact that she can encourage others to eat. When my mother was living at the large assisted living facility, she insisted on eating alone, so this is such a huge improvement.
We never have to worry as a family that mom has not received good hygiene, clean clothes and that her overall health and safety needs are not being met.
This summer has been the first summer in three years that we have been able to leave mom for a couple weeks and enjoy a vacation. We know that she is in the best care possible while we have been away. The staff at Therapeutic Assisted Living consistently updates us with her overall health reports and pictures of mom enjoying life participating in exercises or just relaxing. This is a huge change from us going home after visiting mom at rehab and the large assisted living facility and sitting in front of a blank TV screen and saying "what are we going to do". ?
We as a family recommend Therapeutic Assisted Living to our friends in Palm Coast, so that they are aware of the loving and respectful care that is given at Therapeutic Assisted Living in case it is needed for their family member.
We are so thankful for all of the staff at Therapeutic Assisted Living,residents and family members are so totally embraced and made to feel at home. It is such a loving and caring environment that I wish every person in need of care could reside at Therapeutic Assisted Living.

Debra Foster (daughter of Susanne Penny Clark)
315-560-8234
8644 SW. 59th Ln., Road
Ocala, FL 34481

Debra Foster

AVIATA HEALTH GROUP

6/15/2026

To Whom It May Concern:

It is with great pleasure and sincere appreciation that I write this letter of recommendation for Mrs. LaTasha Rowell, Administrator of Therapeutic Assisted Living.

Over the course of our professional collaboration between Aviata at Grand Oaks, Skilled Nursing Facility and Therapeutic Assisted Living, I have had the opportunity to work directly with Mrs. Rowell and witness firsthand her unwavering commitment to excellence in resident care. Our organizations have maintained a strong and collaborative relationship centered on ensuring continuity of care and achieving the best possible outcomes for the individuals we serve.

Mrs. Rowell consistently demonstrates the highest standards of professionalism, compassion, and leadership. The level of service provided by Therapeutic Assisted Living reflects a culture of excellence that begins with her administration and extends throughout the organization. Her dedication to the well-being, dignity, and quality of life of each resident is evident in every interaction.

When residents from Therapeutic Assisted Living are admitted to Aviata at Grand Oaks for rehabilitation services, Ms. Rowell remains actively engaged in their care. She works closely with our interdisciplinary team, advocating tirelessly on behalf of her residents to ensure their needs are met and that care transitions are seamless. Her hands-on approach, strong communication skills, and resident-centered philosophy embody the true meaning of servitude and compassionate care.

Ms. Rowell possesses an exceptional bedside manner and leads with both empathy and integrity. She consistently places the interests of her residents first, demonstrating a level of advocacy that is both admirable and impactful. Her collaborative spirit fosters strong partnerships with healthcare providers and contributes significantly to positive resident outcomes.

Without reservation, I highly recommend Ms. LaTasha Rowell and Therapeutic Assisted Living. The professionalism, excellence, and dedication she brings to the healthcare community make her an invaluable leader and trusted partner in resident care.

Should you require any additional information, please do not hesitate to contact me.

Sincerely,

C. McNair

Christofer McNair, AIT
Aviata at Grand Oaks
386-446-6060
cmcnair@aviatahg.com

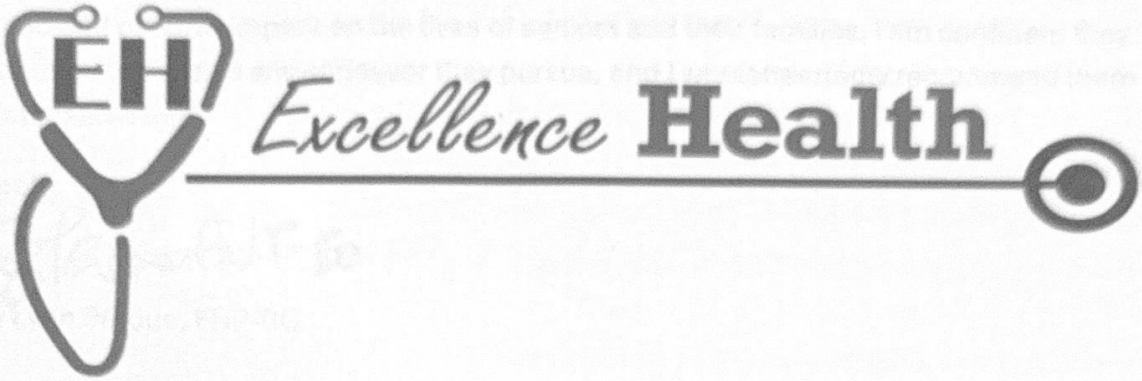

Cindy Perdue, FNP-NP

Excellence Health

1630 Mason Ave, Daytona Beach, FL 32117

8/21/26

To Whom It May Concern,

It is with great enthusiasm that I extend my recommendation for Therapeutic Assisted Living in favor of operation and management of an adult daycare facility. In my time working alongside them, I have witnessed their unwavering professionalism, exceptional leadership, and deep commitment to the well-being of our senior community.

Therapeutic Assisted Living consistently demonstrates excellence in every aspect of their role. They maintain strong, collaborative working relationships with Excellence Health and other healthcare partners, ensuring seamless continuity of care for each resident. Their dedication to advocating for seniors is evident in the personalized attention, respect, and dignity they extend to every individual under their care.

Their expertise in working with residents living with dementia and Alzheimer's disease is particularly commendable. They approach each situation with patience, empathy, and skill, creating an environment where residents feel safe, valued, and understood. This compassionate approach not only enhances quality of life but also fosters trust with families and caregivers.

In addition to their clinical and interpersonal strengths, Therapeutic Assisted Living upholds the highest standards of cleanliness, safety, and organization within the facility. Their attention to detail ensures that the environment remains welcoming, hygienic, and compliant with all safety regulations.

In summary Latasha Rowell is a dedicated, highly capable professional whose work has a profound and positive impact on the lives of seniors and their families. I am confident they will continue to excel in any endeavor they pursue, and I wholeheartedly recommend them without reservation.

Sincerely,

Cindy Lynn Perdue, FNP-BC

7.5 Project Approach

Overall Project Methodology

Therapeutic Assisted Living Corp. ("TAL") proposes a structured, participant-centered approach to the operation of the David I. Siegel Adult Day Care Center that prioritizes **continuity of care, safety, regulatory compliance, quality programming, family support, workforce development, community partnerships, census development, and long-term operational sustainability**.

TAL's approach is based upon its experience operating a regulated senior-care environment in Palm Coast and providing individualized services to older adults, including individuals living with Alzheimer's disease, dementia, mental-health conditions, physical limitations, and other age-related needs.

The objective is not simply to maintain the existing Adult Day Care Center. TAL intends to build upon its established role in the community and develop the Center into a dependable, welcoming, well-managed and highly visible resource for Flagler County seniors and the families who care for them.

TAL will implement the project through the following coordinated approach.

1. Organized Transition and Continuity of Services

Upon award, TAL will work collaboratively with Flagler County to establish an orderly transition plan designed to minimize disruption to existing participants, families, staff, service providers, and community partners.

Initial transition activities will include:

- Coordination with designated County representatives;
- Review of existing Center operations, policies, schedules, participant needs, and available records that may lawfully be transferred;
- Confirmation of all licensing and regulatory requirements applicable to operations;
- Facility and equipment assessment;
- Review of emergency preparedness and life-safety requirements;
- Development of staffing schedules and assignments;
- Confirmation of vendors and essential service providers;
- Participant and family communication;
- Development of enrollment and intake procedures;
- Implementation of required operational policies and documentation systems; and
- Establishment of quality-control benchmarks before full operation.

TAL will seek to preserve continuity wherever doing so remains appropriate while introducing improvements gradually and deliberately.

Participants and families should experience the transition as organized, respectful, and dependable.

2. Person-Centered Participant Care

TAL will operate the Center using a person-centered model that recognizes each participant as an individual with unique physical, cognitive, emotional, social, cultural, and functional needs.

Participant services will be based upon appropriate assessments, enrollment information, healthcare information, family input, physician or provider information when applicable, and ongoing observation.

Services may include, as appropriate:

- Supervision and safety monitoring;
- Assistance with permitted activities of daily living;
- Socialization and companionship;
- Cognitive stimulation;
- Therapeutic and recreational activities;
- Exercise and mobility-related activities appropriate to participant abilities;
- Meals, snacks, hydration, and nutritional monitoring;
- Rest periods;
- Medication assistance within applicable regulatory scope;
- Behavioral observation and redirection;
- Family communication;
- Healthcare-provider coordination; and
- Individualized accommodations based upon participant needs.

TAL's philosophy emphasizes maintaining independence and existing abilities rather than unnecessarily doing for participants what they remain capable of doing safely for themselves.

3. Alzheimer's Disease, Dementia, and Mental-Health Support

TAL recognizes that adult day care programs frequently serve individuals experiencing cognitive impairment, dementia-related behaviors, depression, anxiety, isolation, and other behavioral or mental-health needs.

TAL's existing senior-care experience includes working with individuals with Alzheimer's disease and related dementias and operating under a Limited Mental Health specialty license that requires additional training and competency within the licensed assisted living setting.

This background will inform the Center's approach to:

- Structured daily routines;
- Cognitive and sensory activities;
- Consistent redirection;
- Behavioral observation;
- Reduction of unnecessary environmental stressors;
- Elopement and wandering awareness;
- Fall-risk awareness;

- Individualized communication techniques;
- Meaningful social engagement;
- Family communication;
- Recognition of changes in condition; and
- Coordination with appropriate healthcare and behavioral-health professionals.

The Center will maintain clear boundaries regarding the services that may legally and safely be provided within the adult day care setting and will coordinate higher levels of care when participant needs exceed the program's authorized scope.

4. Meaningful Daily Programming and Engagement

TAL will establish a structured daily program designed to make attendance meaningful rather than merely supervisory.

Programming will balance activity, socialization, therapeutic engagement, nutrition, relaxation, and individual choice.

Activities may include:

- Cognitive exercises and memory activities;
- Arts and crafts;
- Music and music-based engagement;
- Group games;
- Light exercise and range-of-motion activities;
- Gardening and nature-based activities;
- Holiday and cultural programs;
- Educational presentations;
- Community guest programs;
- Reminiscence activities;
- Intergenerational opportunities when appropriate;
- Faith-based or spiritual opportunities for participants who voluntarily choose to participate;
- Individual activities for participants who prefer smaller settings; and
- Special events involving families and community organizations.

Programming will be adapted to participant interests and functional abilities rather than relying upon a one-size-fits-all schedule.

5. Family and Caregiver Partnership

TAL views adult day care as a service to both the participant **and the family caregiver**.

Families and responsible parties will receive clear information regarding Center operations, participant needs, significant observations, program expectations, and available community resources.

TAL will promote regular communication with families and encourage their involvement in participant planning.

Adult day care can provide critical respite to individuals caring for aging relatives at home. TAL will therefore seek to make the Center a trusted extension of the family's care system—not simply a location where a participant spends several hours.

Where appropriate, TAL will also connect families with community resources, healthcare providers, social-service programs, caregiver education, and other available support.

6. Staffing and Local Workforce Development

TAL will maintain staffing appropriate to participant census, acuity, services provided, regulatory requirements, and operational needs.

The staffing structure will include qualified administrative and direct-care personnel with nursing resources incorporated as required by participant needs, program design, and applicable regulations.

TAL will emphasize:

- Appropriate screening and hiring;
- Required background screening;
- Orientation before independent assignment;
- CPR and first-aid preparedness;
- Alzheimer's and dementia-related training;
- Medication-assistance training;
- Emergency preparedness;
- Infection prevention;
- Participant rights;
- Abuse, neglect, and exploitation prevention and reporting;
- Confidentiality;
- Incident reporting;
- Competency validation;
- Ongoing in-service education; and
- Performance monitoring.

TAL will also utilize its relationship with **CareerSource Brevard Flagler Volusia** to support local recruitment and workforce development.

TAL has access to recruitment through Employ Florida and has entered into an On-the-Job Training arrangement supporting the development of qualified local employees. This strategy supports TAL's goal of creating employment opportunities for Flagler County residents while strengthening the Center's long-term workforce pipeline.

Whenever practical, TAL will recruit locally and develop employees who can grow with the Adult Day Care program.

7. Healthcare, Business, and Community Coordination

TAL will utilize its existing relationships within the local healthcare community to support continuity of care, referrals, participant resources, and responsible program growth.

TAL has established professional relationships with pharmacies, hospice organizations, physicians and healthcare practitioners, skilled nursing and rehabilitation providers, and other senior-care resources.

These relationships will support:

- Healthcare communication;
- Medication coordination;
- Referrals;
- Participant transitions;
- Family resources;
- Community education;
- Professional outreach; and
- Development of a broader referral network for the Center.

TAL will also pursue and strengthen relationships with senior programs, veterans' resources, caregiver organizations, churches, nonprofit organizations, community groups, local employers, and other organizations serving Flagler County residents.

Flagler County Chamber of Commerce Participation

TAL intends to actively participate in the **Flagler County Chamber of Commerce and the broader Flagler County business community** as part of the Center's community-engagement and census-development strategy.

Chamber participation will provide an additional avenue for TAL to establish relationships with local businesses, healthcare providers, employers, nonprofit organizations, community leaders, and service organizations whose employees, customers, patients, or families may benefit from adult day care and caregiver respite services.

TAL will utilize Chamber networking opportunities, community events, educational opportunities, and business relationships to:

- Increase community awareness of the Adult Day Care Center;
- Develop professional and community referral relationships;
- Educate local employers about adult day care as a resource for employees caring for aging family members;
- Identify opportunities for community partnerships and sponsorships;
- Promote local senior and caregiver resources;
- Strengthen the Center's integration into the Flagler County community; and
- Support long-term census development.

TAL views participation in the local business community as an important component of making the David I. Siegel Adult Day Care Center a recognized and accessible community resource.

8. Community Relaunch, Grand Opening, Enrollment, and Census Development

Long-term operational sustainability requires a strong and consistent participant census. TAL will therefore implement an active enrollment and outreach strategy rather than relying solely upon passive referrals.

Community Relaunch and Grand Opening

Following the transition of operations and once the Center is prepared to receive participants, TAL intends to conduct a **community relaunch and Grand Opening of the David I. Siegel Adult Day Care Center**.

The purpose of the relaunch will be to reintroduce the Center to the Flagler County community, create renewed awareness of its services, establish confidence in the transition of operations, strengthen professional referral relationships, and generate participant inquiries and enrollment.

TAL intends to invite:

- Seniors and family caregivers;
- Existing and prospective participants;
- Healthcare providers;
- Physicians and medical practices;
- Pharmacies;
- Home-health and hospice organizations;
- Rehabilitation and skilled nursing providers;
- Case managers and social-service professionals;
- Alzheimer’s and dementia organizations;
- Local businesses and employers;
- Chamber and community representatives;
- Veterans' organizations;
- Faith-based organizations;
- Senior-service organizations; and
- Other community stakeholders.

The Grand Opening may include:

- Guided tours of the Center;
- Introduction of TAL leadership and staff;
- Explanation of adult day care services;
- Enrollment information;
- Caregiver-respite education;
- Alzheimer's and dementia resource information;
- Participant activity demonstrations;
- Introductions to community and healthcare partners;

- Opportunities for families to ask questions;
- Individual enrollment consultations; and
- Opportunities to schedule follow-up tours or assessments.

TAL will use the Grand Opening as the beginning of a sustained census-development campaign rather than as a one-time promotional event.

Ongoing Outreach and Enrollment Strategy

Following the relaunch, TAL will maintain active year-round outreach.

Outreach will include:

- Healthcare-provider relationships;
- Hospital and rehabilitation discharge resources;
- Home-health and hospice relationships;
- Physician practices;
- Pharmacies;
- Senior-living and skilled nursing communities;
- Case managers and social-service professionals;
- Alzheimer’s and dementia caregiver networks;
- Flagler County Chamber of Commerce participation;
- Local businesses and employers;
- Veterans' resources;
- Community and nonprofit organizations;
- Local churches and faith communities;
- Health fairs and community events;
- Caregiver-resource programs;
- Educational presentations;
- Digital and social-media outreach;
- Family referrals;
- Professional networking; and
- Direct outreach to caregivers who may benefit from respite services.

TAL will also explore opportunities to host periodic **open houses, caregiver education programs, health and wellness presentations, dementia and memory-care education, community-resource events, and family-engagement activities** at the Center.

These initiatives are intended to keep the Center visible and engaged with the community after the initial relaunch.

Measurement of Census-Building Activities

TAL will monitor:

- Number of inquiries;
- Scheduled tours;
- Completed tours;

- Applications;
- New enrollments;
- Average daily attendance;
- Participant retention;
- Referral sources;
- Community outreach activities;
- Professional referral relationships;
- Inquiry-to-enrollment conversion; and
- Reasons prospective participants elect not to enroll.

Referral sources will be tracked so TAL can identify which healthcare providers, community organizations, Chamber relationships, events, digital outreach efforts, and professional partnerships are producing meaningful results.

This information will allow management to direct resources toward the strategies producing the strongest enrollment results.

The goal is to establish the David I. Siegel Adult Day Care Center as a **visible, trusted, and recognized Flagler County resource for seniors and caregivers while steadily increasing census toward long-term operational sustainability.**

9. Nutrition and Meal Services

TAL recognizes nutrition and hydration as essential components of senior health and quality of life.

Meals and snacks will be provided in accordance with applicable program requirements and participant needs.

TAL will monitor:

- Meal quality;
- Food safety;
- Portion appropriateness;
- Special dietary instructions when properly ordered and within program capability;
- Hydration;
- Participant food preferences;
- Allergies and documented dietary concerns; and
- Participant response to meals.

Meals will also serve as an opportunity for social interaction and community-building within the Center.

10. Safety, Emergency Preparedness, and Risk Management

Participant safety will be incorporated throughout Center operations.

TAL will maintain policies and procedures addressing areas including:

- Emergency preparedness;
- Fire and evacuation procedures;
- Severe weather and disaster response;
- Elopement and missing-participant response;
- Falls;
- Medical emergencies;
- Medication-related incidents;
- Infection prevention;
- Abuse, neglect, and exploitation;
- Incident documentation and reporting;
- Facility hazards;
- Participant transportation, if provided;
- Food safety;
- Confidentiality; and
- Continuity of operations.

Staff will receive appropriate emergency training and participate in required drills and competency reviews.

Incidents and near misses will be evaluated not simply as isolated events but as opportunities to identify and correct underlying risks.

Quality Control Methodology

Quality control will be an ongoing management function rather than an activity performed only when an inspection or complaint occurs.

TAL will implement a **Plan – Monitor – Review – Correct – Improve** quality-management process.

11. Daily Operational Quality Control

Management will monitor key operational areas each day, including:

- Participant attendance;
- Staffing coverage;
- Participant supervision;
- Significant changes in participant condition or behavior;
- Medication-related responsibilities;
- Meals and hydration;
- Activities;
- Facility cleanliness and safety;
- Family concerns;
- Incidents;
- Documentation; and
- Unresolved operational issues.

Issues requiring immediate intervention will be addressed promptly rather than deferred to a later review.

12. Documentation and Compliance Audits

TAL will conduct routine internal reviews of participant and operational records.

Reviews may include:

- Participant files;
- Assessments and required health information;
- Attendance documentation;
- Medication-related records;
- Staff personnel files;
- Background screening documentation;
- Training records;
- Certifications;
- Emergency documentation;
- Incident reports;
- Meal and activity documentation;
- Required postings; and
- Other regulatory records.

Deficiencies identified internally will be assigned corrective action and followed through to completion.

13. Staff Performance and Competency Monitoring

Employees will receive ongoing supervision and performance feedback.

Quality monitoring will evaluate:

- Attendance and dependability;
- Participant interaction;
- Professional conduct;
- Compliance with policies;
- Documentation;
- Communication;
- Safety practices;
- Training completion;
- Demonstrated competencies; and
- Responsiveness to participants and families.

Additional education, coaching, competency validation, corrective action, or other intervention will be implemented when performance does not meet expectations.

14. Participant and Family Feedback

Participant and family experience will be an important quality indicator.

TAL will obtain feedback through regular communication, informal check-ins, concerns and grievance processes, and periodic satisfaction reviews.

Complaints or concerns will be documented, investigated as appropriate, addressed promptly, and reviewed for recurring patterns.

TAL will use feedback to improve programming, communication, meals, scheduling, activities, and overall participant experience.

15. Incident Review and Corrective Action

Incidents, accidents, complaints, medication concerns, falls, near misses, injuries, safety concerns, and other significant events will be reviewed to determine:

1. What occurred;
2. Whether immediate action was taken;
3. Whether required notifications or reports were completed;
4. Whether policies and procedures were followed;
5. Whether additional staff education is necessary;
6. Whether environmental or operational changes are required; and
7. What action can reduce the likelihood of recurrence.

Corrective actions will be documented and monitored for effectiveness.

16. Performance Measures

TAL will monitor measurable indicators to evaluate operational performance and program growth.

Key measures may include:

- Participant census;
- Average daily attendance;
- Enrollment growth;
- Participant retention;
- Inquiry-to-enrollment conversion;
- Referral sources;
- Staff turnover;
- Staff training compliance;
- Incidents and falls;
- Medication-related events;
- Participant/family complaints;
- Resolution of complaints;

- Participant and family satisfaction;
- Program activity participation;
- Regulatory compliance;
- Operating revenues and expenses; and
- Progress toward financial sustainability.

Management will use these indicators to identify trends and make data-informed operational decisions.

17. Continuous Quality Improvement

TAL's quality-control system will emphasize prevention and continuous improvement.

When an opportunity for improvement is identified, TAL will:

Identify the issue → determine the cause → establish corrective action → assign responsibility → establish a completion timeframe → verify completion → evaluate whether the correction was effective.

This process will apply to clinical, operational, staffing, financial, safety, service, and customer-experience concerns.

18. Financial and Operational Sustainability

TAL recognizes that successful operation of the David I. Siegel Adult Day Care Center requires both high-quality services and sound financial management.

Management will routinely evaluate:

- Census;
- Revenue;
- Payroll;
- Staffing utilization;
- Food costs;
- Supplies;
- Insurance;
- Utilities and facility-related expenses;
- Vendor expenses;
- Marketing effectiveness;
- Accounts receivable;
- Program utilization; and
- Overall operating performance.

Staffing and other variable costs will be managed responsibly as enrollment changes while maintaining required service quality and regulatory compliance.

TAL's goal is to establish a financially sustainable program capable of serving Flagler County families over the long term without sacrificing participant care.

Project Outcome

Through this approach, Therapeutic Assisted Living Corp. intends to provide Flagler County with more than an operator for the David I. Siegel Adult Day Care Center.

TAL seeks to establish a **locally managed, accountable, participant-centered senior resource** that provides meaningful daytime services for older adults, dependable respite for caregivers, employment opportunities for local residents, collaboration with healthcare and community partners, and responsible stewardship of the County-owned facility.

The proposed community relaunch, ongoing Chamber and business-community participation, healthcare referral development, caregiver outreach, and measurable census-development strategy are intended to restore and expand awareness of the Center while establishing a sustainable base of participants.

TAL will measure success by the quality and safety of services provided, participant and family satisfaction, regulatory compliance, workforce stability, community utilization, census growth, and the Center’s progress toward sustainable long-term operations.

THERAPEUTIC ASSISTED LIVING CORP.

LOCAL PRESENCE AND WORKFORCE COMMITMENT STATEMENT

David I. Siegel Adult Day Care Center - Flagler County, Florida

---

Therapeutic Assisted Living Corp. ("TAL") respectfully submits this Local Presence and Workforce Commitment Statement in support of its proposal to operate the David I. Siegel Adult Day Care Center. TAL is an established Palm Coast senior-care provider with direct experience serving older adults and families in the local community. As a locally based organization, TAL's approach is centered on keeping services, employment opportunities, professional relationships, and economic activity connected to Flagler County whenever practical.

TAL's local presence provides an operational advantage for the proposed project. The organization already understands the needs of area seniors and caregivers, maintains relationships with healthcare and community providers, and has experience coordinating services within the local senior-care network. This existing community foundation will support continuity, responsiveness, participant outreach, family communication, and the development of trusted referral relationships for the Adult Day Care Center.

Commitment to Local Employment and Workforce Development

TAL is committed to recruiting and developing qualified local personnel for the Adult Day Care Center whenever practical and consistent with applicable licensing, background-screening, training, and competency requirements. TAL is approved to recruit local talent through Employ Florida and has an active relationship with CareerSource Brevard Flagler Volusia. TAL has also entered into an On-the-Job Training arrangement that can support the development of eligible local employees. These resources strengthen TAL's ability to build a sustainable workforce pipeline while creating employment opportunities for residents of Flagler County and the surrounding service area.

Commitment to Community and Business Engagement

TAL intends to participate actively in the Flagler County Chamber of Commerce and the broader local business community as part of its outreach, partnership, and census-development strategy. Chamber participation will help TAL build relationships with local employers, healthcare providers, nonprofit organizations, community leaders, and service organizations that may encounter families in need of adult day care or caregiver respite services.

Commitment to Center Relaunch and Community Awareness

Following transition and operational readiness, TAL intends to conduct a community relaunch and Grand Opening for the David I. Siegel Adult Day Care Center. The relaunch will be designed to increase awareness of the Center, reconnect the facility with seniors and caregivers, engage healthcare and referral partners, and support participant enrollment and census growth. TAL anticipates inviting families, healthcare providers, community organizations, local businesses, faith-based organizations, senior-service professionals, and other stakeholders to tour the Center and learn about available services.

Commitment to Local Partnerships and Economic Participation

Whenever practical and fiscally responsible, TAL will seek opportunities to engage local vendors, service providers, healthcare partners, workforce resources, and community organizations. TAL's goal is to operate the Center not as an isolated program, but as a connected Flagler County resource that contributes to the local senior-care continuum, creates employment opportunities, supports area families, and maintains strong community relationships.

Statement of Commitment

TAL's local presence, existing healthcare relationships, workforce-development resources, and commitment to community engagement will be used to support a stable transition and long-term operation of the David I. Siegel Adult Day Care Center. TAL is committed to being an accountable local operator and a long-term partner in serving Flagler County seniors, caregivers, families, and the surrounding community.

Submitted by:	Latasha Rowell
Title:	Owner / Administrator
Organization:	Therapeutic Assisted Living Corp.
Date:	8/23/26

THERAPEUTIC ASSISTED LIVING CORP.

AHCA PROOF OF FINANCIAL ABILITY TO OPERATE

For Health Care Licensing Application

THERAPEUTIC ASSISTED LIVING CORP.
AHCA PROOF OF FINANCIAL ABILITY TO OPERATE
TABLE OF CONTENTS

Accountant's Disclaimer	I
Prescribed Form "Proof of Financial Ability to Operate"	1
Summary of Significant Assumptions and Selected Supplementary Information	19

REG & ADVISORS, CPA, PA

Tax | Accounting | Advisory

ACCOUNTANT'S DISCLAIMER

To Management

THERAPEUTIC ASSISTED LIVING CORP.

The accompanying projected financial statements (presented on prescribed form "Proof of Financial Ability to Operate") of **Therapeutic Assisted Living Corp.** and selected notes, were not subjected to an audit, review, or compilation engagement by us and we do not express an opinion, a conclusion, nor provide any assurance on them.

The prescribed form is designed by the Agency for Health Care Administration (AHCA) to meet its needs, and there is a presumption that the required information is sufficient to demonstrate the anticipated provider's revenue and expenditures, the basis for financing anticipated cash-flow requirements of the provider, and an applicant's access to contingency financing to be presented with AHCA. Accordingly, this projection may not be useful for other purposes.

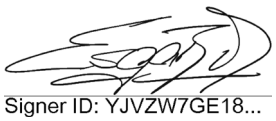

Signer ID: YJVZW7GE18...

REG & Advisors, CPA, PA
Miami, Florida
August 23, 2026

Health Care Licensing Application
PROOF OF FINANCIAL ABILITY TO OPERATE
INSTRUCTIONS

Authority: The following Schedules are designed to meet the specific requirements of 408.810(8), 408.8065(1), and 400.471, Florida Statutes which require the applicant to show anticipated provider revenue and expenditures, the basis for financing anticipated cash-flow requirements of the provider, and an applicant's access to contingency financing. All schedules must be prepared in accordance with generally accepted accounting principles (GAAP). A Certified Public Accountant must compile, examine, or apply agreed-upon procedures to prospective financial statements, including summaries of significant assumptions and accounting policies. An applicant will have demonstrated financial ability to operate by completing proof of financial ability to operate schedules 1-7 in conformity with the below instructions and GAAP, all relevant rules and statutes, and projections that show assets, credit, and projected revenues meet or exceed projected liabilities and expenses and Independent evidence of sufficient funds for start up, working capital & contingencies.

These forms must accompany any ***initial or change of ownership (CHOW) application*** for the following health care provider types:

Adult Day Care Centers (ADCC)	Health Care Clinics
Assisted Living Facilities (ALF)	Home Health Agencies
Intermediate Care Facilities for the Developmentally Disabled (ICFDD)	Hospice
Prescribed Pediatric Extended Care Center (PPEC)	Home Medical Equipment
	Skilled Nursing Facilities

General Instructions – As an all inclusive set of schedules, some of the individual detailed items in these forms may not apply to all provider types listed above. For example, Schedule 3 has an item for Room & Board revenue. This line would be appropriate for residential facilities like skilled nursing or ALF but would not apply to agencies such as home health. In the schedule where the option for hours or visits or days is presented, the applicant may use the metric that is appropriate for the agency. For example, hours are appropriate for home health; visits is appropriate for health care clinics; and days is appropriate for skilled nursing facilities. Several of the schedules include check lists to assist the preparer in completing these forms.

Assumptions Used – Schedules 1-7 reflect the anticipated results of future operations. Since these schedules are forward looking, the applicant will have to make certain assumptions about future patients, revenues, and expenses. The assumptions an applicant uses are essential in developing a projected set of financial schedules. The applicant, at a minimum, must provide assumptions about the number and types of patients it will provide services to, how it plans on acquiring those patients, the staffing required to provide service to those patients, how it plans on recruiting the necessary staffing, and its method of estimating accounts receivable and payable as discussed in the instructions for Schedule 5. All assumptions used in the projections must be contained in accompanying notes to the projections and all assumptions must be consistent with existing rules and statutes governing minimum staffing requirements and any other requirements that would have a financial impact on the applicant. **Home Health Agencies Only** - Section 400.471(2)(d), Florida Statutes, requires a business plan, signed by the applicant, which details the home health agency's methods to obtain patients and its plan to recruit and maintain staff. At a minimum the plan should include a description of the business, services to be provided, the existing market, the level of competition in the market, the applicant's strategy to enter the market (obtain patients), a time-line of major events (for example, expected date of licensure, certification, etc.), the applicant's strategy to recruit and maintain personnel, and a description of the applicant's admission policy.

Schedule 1: Estimated Provider Costs and Source of Funds - The purpose of this Schedule is to disclose ALL costs needed to begin operations (or resume operations in the case of a CHOW) including all pre-opening costs prior to beginning operations, funding for contingencies, and the funds necessary to sustain the operations until it reaches a positive cash flow. The sources of the funding must be listed and independent, certifiable documentation of the existence and availability of those funds must be provided. All funding must be supported by evidence that the entity owns or will have access to funds as needed. Examples of documents that support funding includes copies of bank statements for accounts owned by the proposed entity, a letter of commitment from a bank or other independent lending sources, a copy of a line of credit agreement established for the proposed entity (including the available balance), and any other liquid assets. Liquid assets are defined as assets that can easily and quickly be converted to cash. Funding provided by the corporate parent of a proposed entity must be supported with a letter from the parent indicating that such funds are available to the applicant and independent, certifiable documentation of the existence and availability of those funds as defined above. The most recent Audited Financial Statements of the parent will be considered proof of the parent's ability to fund the applicant unless the parent's Audited Financial Statements indicate that current liabilities are greater than current assets and/or long-term debt exceeds net assets, and/or the audit contains a going concern issue. In the case of the purchase price associated with a change of ownership, the executed bill of sale is acceptable proof of funding the purchase price. The proof of funding for contingencies must include a signed statement from the applicant which identifies the source of contingency funding and guarantying that the contingency funding will be made available to handle extraordinary occurrences that would have a financial impact such as major repairs, purchase of capital equipment, a decrease in patient days, etc. All proof of funding documentation must be dated no later than ten (10) days prior to the date the application is received by AHCA. Attach any other supplementary documentation and/or explanations as needed. For additional instruction follow the checklist at the bottom of Schedule 1.

Schedule 2 and 2.1: Staffing Requirements - The purpose of Schedule 2 is to present the total number of Full Time Equivalent employees (FTEs) projected to staff the operation and convert these FTEs to the total annual salary cost. An employee working only 20 hours a week would be shown as .5 FTE. A full-time employee not hired until the last 3 months of the year would be shown as .25 FTE. The last column for each year is the product of the number of FTEs times the average annual salary per FTE. Schedule 2 is for direct employees only (employees that have payroll taxes withheld from their pay). Schedule 2.1 is for contracted employees. The staffing presented should be consistent with the respective authoritative rules and statutes regarding minimum staffing required. The combined staffing hours on Schedule 2 and 2.1 must be equal to or in excess of the hours needed to provide the services billed on Schedule 3. In addition, the applicant must provide documentation supporting the salary levels for each position. Documentation supporting salary levels may include, labor market studies, industry published averages, signed statements from individuals agreeing to the projected salary, etc. For additional instructions refer to the checklist provided at the bottom of the page on the Schedule 2 and 2.1.

Schedule 3: Hours and Charges - The purpose of this Schedule is to disclose the estimated number of service hours, visits, or days (as appropriate for the provider type) along with the amount charged per hour, visit, or day for the first and second year of operations. Revenue on this schedule must reconcile with Total Gross Revenues on Schedule 4 Line 5, Column 7. Because the method and type of reimbursement varies among different providers, the following subsections were developed to better reconcile with the provider type:

Part A: Must be completed by Home Health, Nurse Registry, Skilled Nursing, ALF, ICFDD, PPEC, and ADCC Only. Home Health applicants must also complete Schedule 4.1 if applying for Medicare and Medicaid Certification.

Part B: Must be completed by Health Care Clinic Applicants only.

Part C: Must be completed by Hospice Applicants only.

All revenue methods will not easily relate to this form, however, please make your best estimates. Attach notes of explanation as needed.

Schedule 3HME: - The purpose of this schedule is the same as the purpose for Schedule 3; however, it has been specifically designed for home medical equipment applicants. This Schedule must be completed by Home Medical Equipment Applicants.

Schedule 4: Projected Operating Revenue - The purpose of this form is to present revenues by payer category. The Total Gross Revenues (Line 5, Column 7) must reconcile with Schedule 3 and 3HME. Often times Medicare, Medicaid, and HMOs may reimburse the agency at a different rate than the charges listed on Schedule 3. The difference must be accounted for as a contractual adjustment on Line 6. HME providers and any other providers selling medical equipment must record cost of goods sold on Line 8.

Use either hours, visits or days as appropriate for the provider type. Medicare and Medicaid net revenues must be consistent with the most recently approved reimbursement methodologies. The hours, visits, or days section of this schedule does not apply to HME applicants.

Schedule 4.1: Supplementary Home Health Agency Schedule - If a Home Health applicant indicates in the application that it is applying for Medicare and/or Medicaid certification and/or the applicant includes Medicare and/or Medicaid revenue on Schedule 4, then the Home Health Agency applicant must complete this schedule. The purpose of this schedule is to address the certification process for Medicare and Medicaid. Home Health Agencies are required to be operational and have at least 10 skilled patients prior to being surveyed by Medicare and Medicaid. Approval is not guaranteed and takes approximately six months to complete. The applicant will not receive reimbursement from Medicare or Medicaid for treatment of Medicare and Medicaid patients prior to certification. In order for an initial applicant to become Medicare and Medicaid certified, the applicant will have to seek accreditation with deemed status from one of three national accreditation organizations. You must provide a written estimate for the cost of accreditation with deemed status from one of the three national accreditation organizations (Community Health Accreditation Organization, The Joint Commission, and Accreditation Commission for Health Care) and include and clearly identify the cost of the accreditation in the projected financial schedules. If the applicant is projecting Medicare and Medicaid revenues prior to anticipated certification, an adjustment must be made on this schedule to remove the Medicare and Medicaid revenues prior to certification (Certification Period Reduction). The Total Net Adjusted Revenue from this schedule must be used on Schedule 6, Line 1, year one instead of the Schedule 4 Net Revenue (Col. 7, Line 13).

Schedule 5: Balance Sheet – The balance sheet is ultimately the results of the projections on Schedule 6 (Income Statement) and Schedule 7 (Cash Flow Statement) and must reconcile with those schedules. The applicant must provide notes with an explanation of the assumptions used for collection of revenues and the paying of expenses. Particularly, the assumptions for payment of rent which typically is paid at the beginning of a month; the payment of salaries, which may be weekly, bi-weekly, or monthly; all of which impact payables differently. The assumptions presented for receivables and payables have a direct impact on the cash flow statement and must be consistently applied when completing the cash flow statement.

Schedule 6: Projected Summary of Revenues and Expenses – The Schedule is designed to show the projected profitability of the applicant. The revenues on this schedule must reconcile with Schedule 4 and 4.1. Administrative, direct, and contracted salaries expense on this schedule must reconcile with Schedule 2 and 2.1. This schedule must included taxes and benefits for direct employees and interest expense on funds borrowed (as indicated on Schedule 1). The monthly salary allocations must be sufficient to meet all minimum staffing requirements including the staffing required to generate the monthly revenue allocated. This schedules must included allocations for utilities (phone, electric, etc), supplies (office and medical), and all other costs expected to be incurred in the normal course of business. If costs are to be shared with an affiliate or parent company, then this schedule should include the applicant's share of those costs. If this is a new entity, the revenue projections must reflect the applicant's assumptions on the growth of patients/ residents expected. Simply dividing year end revenues by 12-months will not be considered a reasonable assumption for a new entity. Existing entities applying for a CHOW may be expected to have a more stable month to month revenue stream. Fixed costs such as rent and administrative overhead must be relatively consistent from month to month while variable cost such as patient care must be proportional to the revenue earned in any one month (matching principle).

The applicant must provide documentation in the form of leases and insurance quotes in support of the rent and insurance expenses projected. **For initial applicants only, financial projections that project a year one operating margin (Schedule 6, Line 36 divided by Schedule 6, Line 1) or any monthly operating margin in year one of 15 percent or greater will be deemed unreasonable and the applicant will be found to have not met its proof of financial ability to operate.**

Schedule 7: Projected Cash Flow Statement – This schedule is designed to determine the working capital needs of the applicant. Line 1 must equal Schedule 6, Line 39. Lines 2 through 12 must reconcile with the income statement and balance sheet and must be consistent with the applicant's assumptions. Line 13 must equal (Line 1 plus Line 7 less Line 12). In year one month one, Line 14 must equal Total Pre-Opening Cost from Schedule 1 Line 14. If the applicant is projecting any capital additions, then the cost of those additions must be included on this schedule. If the applicant is projecting repaying loan principle, then principle repayments must be included on this schedule.

Total Cash Needs - Line 20, Total Cash Needs, is the total of Line 19 - Total Other Uses of Cash, plus Cash Flows from Operations, Line 13. A positive cash flow on Line 13 is subtracted from Line 19. If the positive cash flow is greater than the other uses, the net positive cash needs will be shown as a negative on line 20.

Cumulative Cash Need - Line 21, Cumulative Cash needs, is the running total of last month's cumulative cash needs (Line 21 from last month plus the Total Cash Needs from Line 20 for the current month). If the Total Cash Needs this month is a negative amount meaning a positive cash contribution, it would be subtracted from the cumulative cash amount from last month. The highest monthly amount on Line 21 (considering both year one and year two) will be entered on Schedule 1 as Working Capital. Year 2, month 1 uses year 1, month 12 for its cumulative beginning.

Health Care Licensing Application
PROOF OF FINANCIAL ABILITY TO OPERATE

Authority: Pursuant to subsection 408.810(8) and 400.471, Florida Statutes, upon application for initial licensure or change of ownership licensure, the applicant shall furnish satisfactory proof of the applicant's financial ability to operate in accordance with the requirements of this part, authorizing statutes and applicable rules.

The following provider types are **required** to submit this form: Assisted Living Facilities, Adult Day Care Centers, Hospice, Intermediate Care Facilities for the Developmentally Disabled, Prescribed Pediatric Extended Care Centers, Health Care Clinics, Home Health Agencies, Home Medical Equipment providers, Nurse Registries and Skilled Nursing Facilities.

Provider/Facility Type:			
License # (for change of ownership applications):			
Provider Name: Therapeutic Assisted Living Corp.		Telephone Number: 386-586-2324	
Street Address: 1000 Belle Terre blvd		Fax Number: 844-769-0772	
City: Palm Coast	County: Flagler	State: FL	Zip: 32164
E-mail Address: ☐ No			
Mailing Address: ☑ Same as Above			
City:		State:	Zip:

The attached schedules (1 through 7) must be completed for an initial or change of ownership application. All required documents must be prepared in accordance with generally accepted accounting principles. A Certified Public Accountant must compile, examine, or apply agreed-upon procedures to prospective financial statements, including summaries of significant assumptions and accounting policies. A financial forecast consists of prospective financial statements that present, to the best of the applicant's knowledge and belief, an entity's expected financial position, results of operations, and cash flows.

Name of Certified Public Accountant:			
Company Name (if applicable): REG & Advisors, CPA, PA		Telephone Number: 786-706-5900	
Street Address: 1395 Brickell Ave, Suite 800		Fax Number: 786-706-5901	
City: Miami	County: Dade	State: FL	Zip: 33131
E-mail Address: ☐ No ronnie@regadvisorscpa.com			
Mailing Address: ☑ Same as Above			
City:		State:	Zip:

Signer ID: YJVZW7GE18

AC55135

Signature of Certified Public Accountant and License #

08/23/2026

Date

SCHEDULE 1: ESTIMATED PROVIDER COSTS AND SOURCE OF FUNDS

	Pre-Opening Costs (total funds needed)		
1	Advertising	$	-
2	Equipment Purchases	$	500.00
3	Legal Costs/Consulting	$	1,800.00
4	Beginning Inventory	$	500.00
5	Insurance	$	-
6	License Fee	$	1,705.00
7	Accreditation Survey and/or Medicare & Medicaid Certification	$	-
	Deposits		
8	Building	$	-
9	Utility	$	-
10	Other	$	-
	Staffing		
11	Recruitment	$	-
12	Training	$	-
13	Other	$	-
14	**Total Pre-Opening Costs (Sum of Lines 1-13)**	**$**	**4,505.00**
15	Purchase Price (Change of Ownership Only)	$	-
16	Working Capital (Includes Pre-Opening Cost, See Checklist Below)	**$**	**59,388.13**
17	Contingency Funding (See Checklist Below)	**$**	**20,884.59**
18	**Total Working Capital, Contingency Funding, and Purchase Price**	**$**	**80,272.72**

	Source of Funds (Please Attach Documentation Supporting the Source of Funding Listed Below: REQUIRED)		
19	Cash on Hand	$	80,272.72
20	Non-related Financing	$	-
21	Owners/Investors	$	-
22	Parent or Affiliated Entities	$	-
23	Other (describe):	$	-
24	**Total Source of Funds**	**$**	**80,272.72**

Applicant Checklist

✓ **Working Capital** - is the amount needed to pay operating cost until a positive cash flow is reached. Working Capital should equal the largest cumulative cash need from Schedule 7 Line 21. Since Schedule 7 includes pre-opening cost, the largest cumulative cash need from Schedule 7 Line 21 will also include pre-opening cost.

✓ **Contingency Funding** - should equal one month's average operating expense from year one and represents funding available for extraordinary occurrences that are not anticipated in the financial projections. Contingency Funding should equal Year One Schedule 6 Line 35 divided by 12.

✓ **Proof of Funding** - Has the applicant provided proof of funding as described in the instructions?
If so, does the proof of funding equal or exceed the value on Line 18?
For **Health Care Clinics, Home Health, and Home Medical Equipment Agencies**: Total proof of funding can not be less than three(3) times the amount on line 17 per 408.8065(1)(c), Florida Statutes

SCHEDULE 2: STAFFING REQUIREMENTS

		YEAR ONE			YEAR TWO		
	Note: 1.0 FTE = 40 hour week	FTE's	AVERAGE ANNUAL SALARY per FTE	TOTAL ANNUAL COST	FTE's	AVERAGE ANNUAL SALARY per FTE	TOTAL ANNUAL COST
	ADMINISTRATION	Col. 1	Col. 2	Col.1 x Col.2	Col. 1	Col. 2	Col.1 x Col.2
1	Administrator/General Manager	0.80	$ 31,200.00	$ 24,960.00	0.80	$ 31,200.00	$ 24,960.00
2	Alternate Administrator	0.20	$ 31,200.00	$ 6,240.00	0.20	$ 31,200.00	$ 6,240.00
3	Director of Nursing/Medical Director	0.00	$ -	$ -	0.00	$ -	$ -
4	Alternate Director of Nursing	0.00	$ -	$ -	0.00	$ -	$ -
5	Financial Officer	0.20	$ 31,200.00	$ 6,240.00	0.20	$ 31,200.00	$ 6,240.00
6	Admissions Director	0.00	$ -	$ -	0.00	$ -	$ -
7	Bookkeeper	0.00	$ -	$ -	0.00	$ -	$ -
8	Secretary	0.00	$ -	$ -	0.00	$ -	$ -
9	Personnel/Complaint Records	0.00	$ -	$ -	0.00	$ -	$ -
10	Medical Records Clerk	0.00	$ -	$ -	0.00	$ -	$ -
11	Other:	0.00	$ -	$ -	0.00	$ -	$ -
12	**TOTAL ADMINISTRATION**	**1.20**		**$ 37,440.00**	**1.20**		**$ 37,440.00**
	GENERAL PERSONNEL (DIRECT EMPLOYEES ONLY)						
13	Delivery	0	$ -	$ -	0	$ -	$ -
14	Intake	0	$ -	$ -	0	$ -	$ -
15	Maintenance/Repair	0	$ -	$ -	0	$ -	$ -
16	Inventory	0	$ -	$ -	0	$ -	$ -
17	Other:	0	$ -	$ -	0	$ -	$ -
18	**TOTAL GENERAL**	**0**		**$ -**	**0**		**$ -**
	HEALTH CARE PROFESSIONALS (DIRECT EMPLOYEES ONLY) - Nurse Registries Complete Schedule 2.1						
19	R.N.s	0.00	$ -	$ -	0.00	$ -	$ -
20	L.P.N.s	0.00	$ -	$ -	0.00	$ -	$ -
21	Home Health Aides	0.00	$ -	$ -	0.00	$ -	$ -
22	Physical Therapy	0.00	$ -	$ -	0.00	$ -	$ -
23	Occupational Therapy	0.00	$ -	$ -	0.00	$ -	$ -
24	Speech Therapy	0.00	$ -	$ -	0.00	$ -	$ -
25	Respiratory Therapy	0.00	$ -	$ -	0.00	$ -	$ -
26	Social Services	0.00	$ -	$ -	0.00	$ -	$ -
27	Homemaker Services	0.00	$ -	$ -	0.00	$ -	$ -
28	Dietary Guidance	0.00	$ -	$ -	0.00	$ -	$ -
29	Home Health Aides	0.00	$ -	$ -	0.00	$ -	$ -
30	Other: Caregivers	3.00	$ 31,200.00	$ 93,600.00	5.00	$ 31,200.00	$ 156,000.00
31	**TOTAL HEALTH CARE**	**3.00**		**$ 93,600.00**	**5.00**		**$ 156,000.00**
	GRAND TOTAL	**4.20**		**$ 131,040.00**	**6.20**		**$ 193,440.00**

Applicant Checklist

✓ **Required Staffing** - has the applicant included salaries and FTEs to meet the minimum administrative staffing required under AHCA licensing rules and statutes?

✓ **Comparison to Hours Billed** - Has the applicant allocated enough salaries and FTEs on Schedule 2 including contracted personnel on Schedule 2.1 to provide services to the number of patients on Schedule 3?

SCHEDULE 2.1: CONTRACT SERVICES

		YEAR ONE			YEAR TWO		
		Hours	Cost Per Hour	Total Cost	Hours	Cost Per Hour	Total Cost
	GENERAL PERSONNEL	Col. 1	Col. 2	Col.1 x Col.2	Col. 1	Col. 2	Col.1 x Col.2
1	Delivery	0	$ -	$ -	0	$ -	$ -
2	Intake	0	$ -	$ -	0	$ -	$ -
3	Maintenance/Repair	0	$ -	$ -	0	$ -	$ -
4	Inventory	0	$ -	$ -	0	$ -	$ -
5	Other:		$ -	$ -	0	$ -	$ -
6	**TOTAL**	**0**		**$ -**	0		**$ -**
	HEALTH CARE PROFESSIONALS						
7	R.N.s		$ -	$ -		$ -	$ -
8	L.P.N.s	260	$ 25.00	$ 6,500.00	260	$ 25.00	$ 6,500.00
9	Home Health Aides		$ -	$ -		$ -	$ -
10	Physical Therapy		$ -	$ -		$ -	$ -
11	Occupational Therapy		$ -	$ -		$ -	$ -
12	Speech Therapy		$ -	$ -		$ -	$ -
13	Respiratory Therapy		$ -	$ -		$ -	$ -
14	Social Services		$ -	$ -		$ -	$ -
15	Homemaker Services		$ -	$ -		$ -	$ -
16	Dietary Guidance		$ -	$ -		$ -	$ -
17	Home Health Aides		$ -	$ -		$ -	$ -
18	Other:		$ -	$ -		$ -	$ -
19	Other:		$ -	$ -		$ -	$ -
20	Other:		$ -	$ -		$ -	$ -
21	Other:		$ -	$ -		$ -	$ -
22	Other:		$ -	$ -		$ -	$ -
23	**TOTAL**	**260**		**$ 6,500.00**	**260**		**$ 6,500.00**

Applicant Checklist

✓ **Comparison to Hours Billed** - Has the applicant allocated enough salaries and FTEs on Schedule 2 including contracted personnel on Schedule 2.1 to provide services to the number of patients on Schedule 3?

___ **Nurse Registry** - If the applicant is applying for a nurse registry license, Schedule 2.1 must be completed. If the applicant is applying for a license other than nurse registry this schedule should only be completed to reflect the appropriate number of non-direct employee hours anticipated by the applicant, if any.

SCHEDULE 3: HOURS, VISITS, AND CHARGES

Part A: For Home Health, Nurse Registry, Skilled Nursing, ALF, ICFDD, PPEC. and ADCC Only

	FIRST YEAR			SECOND YEAR		
	Total Number of Hours/Days	Average Charge Per Hour/Day	Total Gross Revenue	Total Number of Hours/Days	Average Charge Per Hour/Day	Total Gross Revenue
	Col. 1	Col. 2	Col. 1 x Col. 2	Col. 1	Col. 2	Col. 1 x Col. 2
Room & Board	0	$ -	$ -	0	$ -	$ -
Skilled Nursing	0	$ -	$ -	0	$ -	$ -
Ancillary						
Physical Therapy	0	$ -	$ -	0	$ -	$ -
Occupational Therapy	0	$ -	$ -	0	$ -	$ -
Speech Therapy	0	$ -	$ -	0	$ -	$ -
Medical Social Services	0	$ -	$ -	0	$ -	$ -
Respiratory Therapy	0	$ -	$ -	0	$ -	$ -
IV Therapy	0	$ -	$ -	0	$ -	$ -
Home Health Aides or CNA	0	$ -	$ -	0	$ -	$ -
Homemaker/Companion	0	$ -	$ -	0	$ -	$ -
Nutritional Guidance	0	$ -	$ -	0	$ -	$ -
Home Health Aides or CNA	0	$ -	$ -	0	$ -	$ -
PPEC & ADCC						
Daily Patient	3,380	$ 65.00	$ 219,700.00	6760	$ 65.00	$ 439,400.00
Hourly Patient	0	$ -	$ -	0	$ -	$ -
TOTAL	**3,380**		**$ 219,700.00**	**6,760**		**$ 439,400.00**

Part B: Health Care Clinics Applicants Only

List the Type of Visits	FIRST YEAR			SECOND YEAR		
	Total Number of Visits	Average Charge Per Visits	Total Gross Revenue	Total Number of Visits	Average Charge Per Visits	Total Gross Revenue
	Col. 1	Col. 2	Col. 1 x Col. 2	Col. 1	Col. 2	Col. 1 x Col. 2
	0	$ -	$ -	0	$ -	$ -
	0	$ -	$ -	0	$ -	$ -
	0	$ -	$ -	0	$ -	$ -
	0	$ -	$ -	0	$ -	$ -
	0	$ -	$ -	0	$ -	$ -
	0	$ -	$ -	0	$ -	$ -
	0	$ -	$ -	0	$ -	$ -
TOTAL	**0**		**$ -**	**0**		**$ -**

Part C:Hospices Only

	FIRST YEAR			SECOND YEAR		
	Total Number of Visits/Days	Average Charge Per Visit/Day	Total Gross Revenue	Total Number of Visits/Days	Average Charge Per Visit/Day	Total Gross Revenue
	Col. 1	Col. 2	Col. 1 x Col. 2	Col. 1	Col. 2	Col. 1 x Col. 2
Routine Home Care	0	$ -	$ -	0	$ -	$ -
Continuous Home Care	0	$ -	$ -	0	$ -	$ -
Inpatient Respite	0	$ -	$ -	0	$ -	$ -
General Inpatient	0	$ -	$ -	0	$ -	$ -
TOTAL	**0**		**$ -**	**0**		**$ -**

SCHEDULE 3HME: CHARGES (HME APPLICANTS ONLY)

List the Type of Equipment to be Sold	FIRST YEAR			SECOND YEAR		
	Total Number of Units	Average Charge Per Unit	Total Gross Revenue	Total Number of Units	Average Charge Per Unit	Total Gross Revenue
	Col. 1	Col. 2	Col. 1 x Col. 2	Col. 1	Col. 2	Col. 1 x Col. 2
Respiratory Modalities						
	0	$ -	$ -	0	$ -	$ -
	0	$ -	$ -	0	$ -	$ -
	0	$ -	$ -	0	$ -	$ -
	0	$ -	$ -	0	$ -	$ -
Ambulation Aids						
	0	$ -	$ -	0	$ -	$ -
	0	$ -	$ -	0	$ -	$ -
	0	$ -	$ -	0	$ -	$ -
	0	$ -	$ -	0	$ -	$ -
Mobility Aids						
	0	$ -	$ -	0	$ -	$ -
	0	$ -	$ -	0	$ -	$ -
	0	$ -	$ -	0	$ -	$ -
	0	$ -	$ -	0	$ -	$ -
Sickroom Setup						
	0	$ -	$ -	0	$ -	$ -
	0	$ -	$ -	0	$ -	$ -
	0	$ -	$ -	0	$ -	$ -
	0	$ -	$ -	0	$ -	$ -
Disposable Supplies						
	0	$ -	$ -	0	$ -	$ -
	0	$ -	$ -	0	$ -	$ -
	0	$ -	$ -	0	$ -	$ -
	0	$ -	$ -	0	$ -	$ -
TOTAL	**0**		**$ -**	**0**		**$ -**

List the Type of Equipment to be Rented	FIRST YEAR			SECOND YEAR		
	Total Number of Units	Average Charge Per Unit	Total Gross Revenue	Total Number of Units	Average Charge Per Unit	Total Gross Revenue
	Col. 1	Col. 2	Col. 1 x Col. 2	Col. 1	Col. 2	Col. 1 x Col. 2
Respiratory Modalities						
	0	$ -	$ -	0	$ -	$ -
	0	$ -	$ -	0	$ -	$ -
Ambulation Aids						
	0	$ -	$ -	0	$ -	$ -
	0	$ -	$ -	0	$ -	$ -
Mobility Aids						
	0	$ -	$ -	0	$ -	$ -
	0	$ -	$ -	0	$ -	$ -
Sickroom Setup						
	0	$ -	$ -	0	$ -	$ -
	0	$ -	$ -	0	$ -	$ -
Disposable Supplies						
	0	$ -	$ -	0	$ -	$ -
	0	$ -	$ -	0	$ -	$ -
TOTAL	**0**		**$ -**	**0**		**$ -**

SCHEDULE 4: PROJECTED OPERATING REVENUE YEAR 1

Page 1 of 2 pages

	GROSS REVENUES (from Schedule 3)	PRIVATE PAY Col. 1	MEDICARE Col. 2	MEDICAID Col. 3	INSURANCE Col. 4	HMO/PPO Col. 5	OTHER Col. 6	TOTAL Col. 7
1	Home Health, Nurse Registry, Skilled Nursing, ALF, ICFDD, PPEC. and ADCC	$ 32,955	$ -	$ 186,745	$ -	$ -	$ -	$ 219,700
2	Health Care Clinics	$ -	$ -	$ -	$ -	$ -	$ -	$ -
3	Home Medical Equipment	$ -	$ -	$ -	$ -	$ -	$ -	$ -
4	Hospice	$ -	$ -	$ -	$ -	$ -	$ -	$ -
5	**TOTAL GROSS REVENUES**	$ 32,955	$ -	$ 186,745	$ -	$ -	$ -	$ 219,700
	DEDUCTIONS FROM REVENUE							
6	Contractual Adjustments	$ -	$ -	$ -	$ -	$ -	$ -	$ -
7	Charity Care	$ -	$ -	$ -	$ -	$ -	$ -	$ -
8	Cost of Goods Sold	$ -	$ -	$ -	$ -	$ -	$ -	$ -
9	Other	$ -	$ -	$ -	$ -	$ -	$ -	$ -
10	**TOTAL DEDUCTIONS FROM REVENUE**	$ -	$ -	$ -	$ -	$ -	$ -	$ -
11	**NET PATIENT SERVICE REVENUE**	$ 32,955	$ -	$ 186,745	$ -	$ -	$ -	$ 219,700
12	**OTHER OPERATING REVENUE**	$ -	$ -	$ -	$ -	$ -	$ -	$ -
13	**NET OPERATING REVENUE**	$ 32,955	$ -	$ 186,745	$ -	$ -	$ -	$ 219,700
14	Total Number of Patients/Residents	507	0	2873	0	0	0	3380
15	Total Hours/Visits/Days	10	0	55	0	0	0	65
16	Net Revenue Per Hour/Visit/Day	$ 3,380	$ -	$ 3,380	$ -	$ -	$ -	$ 3,380

If you are applying for Medicare and/or Medicaid certification enter the number of months you anticipate operating prior to receiving certification. **2 mos.**

Applicant Checklist

✓ Does Line 5, Total Patient Service Revenues, reconcile with Schedule 3 and 3HME?

✓ Is the Net Medicare and Medicaid Revenue per Hour/Visit/Day (Line 16, Column 2 and 3) consistent with current reimbursement rates?

___ Home Health Agencies that are applying for Medicaid and/or Medicare must complete Schedule 4.1.

SCHEDULE 4: PROJECTED OPERATING REVENUE YEAR 2

Page 2 of 2 pages

	GROSS REVENUES (from Schedule 3)	PRIVATE PAY Col. 1	MEDICARE Col. 2	MEDICAID Col. 3	INSURANCE Col. 4	HMO/PPO Col. 5	OTHER Col. 6	TOTAL Col. 7
1	Home Health, Nurse Registry, Skilled Nursing, ALF, ICFDD, PPEC. and ADCC	$ -	$ -	$ 439,400	$ -	$ -	$ -	$ 439,400
2	Health Care Clinics	$ -	$ -	$ -	$ -	$ -	$ -	$ -
3	Home Medical Equipment	$ -	$ -	$ -	$ -	$ -	$ -	$ -
4	Hospice	$ -	$ -	$ -	$ -	$ -	$ -	$ -
5	**TOTAL GROSS REVENUES**	$ -	$ -	$ 439,400	$ -	$ -	$ -	$ 439,400
	DEDUCTIONS FROM REVENUE							
6	Contractual Adjustments	$ -	$ -	$ -	$ -	$ -	$ -	$ -
7	Charity Care	$ -	$ -	$ -	$ -	$ -	$ -	$ -
8	Cost of Goods Sold	$ -	$ -	$ -	$ -	$ -	$ -	$ -
9	Other	$ -	$ -	$ -	$ -	$ -	$ -	$ -
10	**TOTAL DEDUCTIONS FROM REVENUE**	$ -	$ -	$ -	$ -	$ -	$ -	$ -
11	**NET PATIENT SERVICE REVENUE**	$ -	$ -	$ 439,400	$ -	$ -	$ -	$ 439,400
12	**OTHER OPERATING REVENUE**	$ -	$ -	$ -	$ -	$ -	$ -	$ -
13	**NET OPERATING REVENUE**	$ -	$ -	$ 439,400	$ -	$ -	$ -	$ 439,400
14	Total Number of Patients/Residents	0	0	6760	0	0	0	6760
15	Total Hours/Visits/Days	0	0	65	0	0	0	65
16	Net Revenue Per Hour/Visit/Day	$ -	$ -	$ 6,760	$ -	$ -	$ -	$ 6,760

Applicant Checklist

✓ Does Line 5, Total Patient Service Revenues reconcile with Schedule 3?

✓ Is the Net Medicare and Medicaid Revenue per Hour/Visit/Day (Line 16, Column 2 and 3) consistent with current reimbursement rates?

SCHEDULE 4.1: HOME HEALTH AGENCY PROJECTED OPERATING REVENUE YEAR 1

This Schedule is only to be completed by Home Health Agencies who will apply for Medicaid and Medicare certification.

Note: Medicare and Medicaid will not reimburse HHA for treatment of Medicaid and Medicare patients prior to certification, this process takes between four and six months and is not guaranteed. This Schedule is designed to show Medicare and Medicaid revenues by month and the reduction to revenues over the certification period. The adjusted net revenue from this schedule will be used on Schedule 6 year one.

Note: In order for an initial applicant to become Medicare and Medicaid certified, the applicant will have to seek accreditation with deemed status from one of three national accreditation organizations. Please provide a written estimate for the cost of accreditation with deemed status from one of the three national accreditation organizations (Community Health Accreditation Organization, The Joint Commission, and Accreditation Commission for Health Care). Also, please include and clearly identify the cost of the accreditation on Schedule 1.

		1	2	3	4	5	6	7	8	9	10	11	12	Total
Medicare														
1	New Episodes													$ -
2	Net Revenue (Sch 4, Col 2, Line 11)	$ -	$ -	$ -	$ -	$ -	$ -	$ -	$ -	$ -	$ -	$ -	$ -	$ -
3	Certification Period Reduction	$ -	$ -	$ -	$ -	$ -	$ -							$ -
4	Adjusted Net Revenue (Line 2 - Line 3)	$ -	$ -	$ -	$ -	$ -	$ -	$ -	$ -	$ -	$ -	$ -	$ -	$ -
Medicaid														
5	Number of Patients	0	0	0	0	0	0	0	0	0	0	0	0	$ -
6	Net Revenue (Sch 4, Col 3, Line 11)	$ -	$ -	$ -	$ -	$ -	$ -	$ -	$ -	$ -	$ -	$ -	$ -	$ -
7	Certification Period Reduction	$ -	$ -	$ -	$ -	$ -	$ -	$ -	$ -	$ -	$ -	$ -	$ -	$ -
8	Adjusted Net Revenue (Line 6 - Line 7)	$ -	$ -	$ -	$ -	$ -	$ -	$ -	$ -	$ -	$ -	$ -	$ -	$ -
All Other Payers														
17	Number of Patients	0	0	0	0	0	0	0	0	0	0	0	0	$ -
10	Net Rev. (Sch 4, Line 11, Col 1, 4, 5, & 6)	$ -	$ -	$ -	$ -	$ -	$ -	$ -	$ -	$ -	$ -	$ -	$ -	$ -
Total Adjusted Net Revenue (Line 4+8+10)		**$ -**	**$ -**	**$ -**	**$ -**	**$ -**	**$ -**	**$ -**	**$ -**	**$ -**	**$ -**	**$ -**	**$ -**	**$ -**

SCHEDULE 5: BALANCE SHEET

	END OF YEAR ONE		END OF YEAR TWO	
ASSETS				
Current Assets				
Cash		$ 47,519		$ 127,972
Inventory		500		500
Accounts Receivable		1,014		1,099
Notes Receivable				
Other: Prepaid Expense		853		-
		-		
Total Current Assets		**49,886**		**129,571**
Fixed and Other Assets				
Net Land and Buildings				
Equipment	$ 500		$ 500	
Less Acc. Depreciation	100		200	
Net Equipment		400		300
Other:	$ -		$ -	
Total Fixed and Other Assets		**400**		**300**
Total Assets		**$ 50,286**		**$ 129,871**
LIABILITIES AND NET ASSETS				
Current Liabilities				
Accounts Payable		$ 928		$ 928
Notes Payable				
Current Maturities of L.T. Debt				
Other:		-		-
Total Current Liabilities		**928**		**928**
Long-Term and Other Liabilities				
Mortgage Payable		-		-
Payable to Affiliates				
Other:				
Total Long-Term and Other Liabilities		**928**		**928**
Net Assets				
Common Stock		1,000		1,000
Additional Paid In Capital		79,273		79,273
Net Assets		-		-
Retained Earnings		(30,915)		48,670
Other:				
Total Net Assets		**49,358**		**128,943**
Total Liabilities and Net Assets		**$ 50,286**		**$ 129,871**
		-		0

Applicant Checklist

- ✓ Does the Cash, Inventory, Accounts Receivable, and Accounts Payable Balance reconcile with the Cash Flow Statement (Sch. 7)?
- ✓ Does Depreciation and Retained Earnings reconcile with the income statement?
- ✓ Did the applicant attach notes with the assumptions used for collecting receivables and paying payables?

SCHEDULE 6 - PROJECTED SUMMARY OF REVENUES AND EXPENSES

YEAR 1

	Month	1	2	3	4	5	6	7	8	9	10	11	12	TOTALS
NET OPERATING REVENUE														
1	Net Revenue From Sch 4 and Sch 4.1	2,817	5,633	8,450	11,267	14,083	16,900	19,717	22,533	25,350	28,167	30,983	33,800	219,700
EXPENSES:														
	ADMINISTRATION & OVERHEAD													
2	Salaries and Wages (Sch 2, Row 12)	3,120	3,120	3,120	3,120	3,120	3,120	3,120	3,120	3,120	3,120	3,120	3,120	37,440
3	Benefits	62	62	62	62	62	62	62	62	62	62	62	62	749
4	Rent	500	500	500	500	500	500	500	500	500	500	500	500	6,000
5	Utilities and Maintenance	50	50	50	50	50	50	50	50	50	50	50	50	600
6	License	71	71	71	71	71	71	71	71	71	71	71	71	853
7	Federal, State, & Local Taxes	858	858	858	858	858	858	858	858	858	858	858	858	10,302
8	Insurance, Liability & Other	2,867	2,867	2,867	2,867	2,867	2,867	2,867	2,867	2,867	2,867	2,867	2,867	34,400
9	Education and Training	-	-	-	-	-	-	-	-	-	-	-	-	-
10	Professional Fees	2,100	300	300	300	300	300	300	300	300	300	300	300	5,400
11	Interest	-	-	-	-	-	-	-	-	-	-	-	-	-
12	Repair & Maintenance	500	500	500	500	500	500	500	500	500	500	500	500	6,000
13	Bad Debts	-	-	-	-	-	-	-	-	-	-	-	-	-
14	Depreciation & Amortization	8	8	8	8	8	8	8	8	8	8	8	8	100
15	Other	-	-	-	-	-	-	-	-	-	-	-	-	-
16	Other	-	-	-	-	-	-	-	-	-	-	-	-	-
17	**TOTAL ADMIN. AND OVERHEAD**	$ 10,137	$ 8,337	$ 8,337	$ 8,337	$ 8,337	$ 8,337	$ 8,337	$ 8,337	$ 8,337	$ 8,337	$ 8,337	$ 8,337	$ 101,843
	SALARIES & WAGES (Sch 2 & 2.1)													
18	General Personnel (Sch 2, Row 18)	-	-	-	-	-	-	-	-	-	-	-	-	-
19	Health Care (Sch 2, Row 31)	7,800	7,800	7,800	7,800	7,800	7,800	7,800	7,800	7,800	7,800	7,800	7,800	93,600
20	Benefits	156	156	156	156	156	156	156	156	156	156	156	156	1,872
21	Mileage	-	-	-	-	-	-	-	-	-	-	-	-	-
22	Contract Gen. Per. (Sch 2.1, Row 6)	-	-	-	-	-	-	-	-	-	-	-	-	-
23	Cont. Health Care (Sch 2.1, Row 23)	542	542	542	542	542	542	542	542	542	542	542	542	6,500
24	Other	-	-	-	-	-	-	-	-	-	-	-	-	-
25	**TOTAL SALARIES & WAGES**	$ 8,498	$ 8,498	$ 8,498	$ 8,498	$ 8,498	$ 8,498	$ 8,498	$ 8,498	$ 8,498	$ 8,498	$ 8,498	$ 8,498	$ 101,972
	OTHER OPERATING EXPENSES													
26	Housekeeping	-	-	-	-	-	-	-	-	-	-	-	-	-
27	Laundry	-	-	-	-	-	-	-	-	-	-	-	-	-
28	Dietary	600	1,200	1,800	2,400	3,000	3,600	4,200	4,800	5,400	6,000	6,600	7,200	46,800
29	Other Ancillary	-	-	-	-	-	-	-	-	-	-	-	-	-
30	Medical Supplies	-	-	-	-	-	-	-	-	-	-	-	-	-
31	Other	-	-	-	-	-	-	-	-	-	-	-	-	-
32	Other	-	-	-	-	-	-	-	-	-	-	-	-	-
33	Other	-	-	-	-	-	-	-	-	-	-	-	-	-
34	**TOTAL OTHER OPERATING**	$ 600	$ 1,200	$ 1,800	$ 2,400	$ 3,000	$ 3,600	$ 4,200	$ 4,800	$ 5,400	$ 6,000	$ 6,600	$ 7,200	$ 46,800
35	**TOTAL OPERATING COSTS**	$ 19,235	$ 18,035	$ 18,635	$ 19,235	$ 19,835	$ 20,435	$ 21,035	$ 21,635	$ 22,235	$ 22,835	$ 23,435	$ 24,035	$ 250,615
36	**NET OPERATING INCOME (LOSS)**	$ (16,418)	$ (12,401)	$ (10,185)	$ (7,968)	$ (5,751)	$ (3,535)	$ (1,318)	$ 899	$ 3,115	$ 5,332	$ 7,549	$ 9,765	$ (30,915)
37	**OPERATING MARGIN%**	-582.88%	-220.14%	-120.53%	-70.72%	-40.84%	-20.91%	-6.68%	3.99%	12.29%	18.93%	24.36%	28.89%	-14.07%
38	**NON OPERATING REVENUES (NET)**	-	-	-	-	-	-	-	-	-	-	-	-	-
39	**INCOME OR (LOSS)**	$ (16,418)	$ (12,401)	$ (10,185)	$ (7,968)	$ (5,751)	$ (3,535)	$ (1,318)	$ 899	$ 3,115	$ 5,332	$ 7,549	$ 9,765	$ (30,915)

SCHEDULE 6 - PROJECTED SUMMARY OF REVENUES AND EXPENSES

YEAR 2

	Month	1	2	3	4	5	6	7	8	9	10	11	12	TOTALS
NET OPERATING REVENUE														
1	Net Revenue From Sch 4	36,617	36,617	36,617	36,617	36,617	36,617	36,617	36,617	36,617	36,617	36,617	36,617	439,400
EXPENSES:														
	ADMINISTRATION & OVERHEAD													
2	Salaries and Wages (Sch 2, Row 12)	3,120	3,120	3,120	3,120	3,120	3,120	3,120	3,120	3,120	3,120	3,120	3,120	37,440
3	Benefits	62	62	62	62	62	62	62	62	62	62	62	62	749
4	Rent	500	500	500	500	500	500	500	500	500	500	500	500	6,000
5	Utilities and Maintenance	50	50	50	50	50	50	50	50	50	50	50	50	600
6	License	71	71	71	71	71	71	71	71	71	71	71	71	853
7	Federal, State, & Local Taxes	858	858	858	858	858	858	858	858	858	858	858	858	10,302
8	Insurance, Liability & Other	2,867	2,867	2,867	2,867	2,867	2,867	2,867	2,867	2,867	2,867	2,867	2,867	34,400
9	Education and Training	-	-	-	-	-	-	-	-	-	-	-	-	-
10	Professional Fees	2,100	300	300	300	300	300	300	300	300	300	300	300	5,400
11	Interest	-	-	-	-	-	-	-	-	-	-	-	-	-
12	Repair & Maintenance	500	500	500	500	500	500	500	500	500	500	500	500	6,000
13	Bad Debts	-	-	-	-	-	-	-	-	-	-	-	-	-
14	Depreciation & Amortization	8	8	8	8	8	8	8	8	8	8	8	8	100
15	Other	-	-	-	-	-	-	-	-	-	-	-	-	-
16	Other	-	-	-	-	-	-	-	-	-	-	-	-	-
17	**TOTAL ADMIN. AND OVERHEAD**	$ 10,137	$ 8,337	$ 8,337	$ 8,337	$ 8,337	$ 8,337	$ 8,337	$ 8,337	$ 8,337	$ 8,337	$ 8,337	$ 8,337	$ 101,843
	SALARIES & WAGES (Sch 2 & 2.1)													
18	General Personnel (Sch 2, Row 18)	-	-	-	-	-	-	-	-	-	-	-	-	-
19	Health Care (Sch 2, Row 31)	13,000	13,000	13,000	13,000	13,000	13,000	13,000	13,000	13,000	13,000	13,000	13,000	156,000
20	Benefits	156	156	156	156	156	156	156	156	156	156	156	156	1,872
21	Mileage													-
22	Contract Gen. Per. (Sch 2.1, Row 6)	-	-	-	-	-	-	-	-	-	-	-	-	-
23	Cont. Health Care (Sch 2.1, Row 23)	542	542	542	542	542	542	542	542	542	542	542	542	6,500
24	Other	-	-	-	-	-	-	-	-	-	-	-	-	-
25	**TOTAL SALARIES & WAGES**	$ 13,698	$ 13,698	$ 13,698	$ 13,698	$ 13,698	$ 13,698	$ 13,698	$ 13,698	$ 13,698	$ 13,698	$ 13,698	$ 13,698	$ 164,372
	OTHER OPERATING EXPENSES													
26	Housekeeping	-	-	-	-	-	-	-	-	-	-	-	-	-
27	Laundry	-	-	-	-	-	-	-	-	-	-	-	-	-
28	Dietary	-	-	-	-	-	-	-	-	-	-	-	-	-
29	Other Ancillary	-	-	-	-	-	-	-	-	-	-	-	-	-
30	Medical Supplies	7,800	7,800	7,800	7,800	7,800	7,800	7,800	7,800	7,800	7,800	7,800	7,800	93,600
31	Other	-	-	-	-	-	-	-	-	-	-	-	-	-
32	Other	-	-	-	-	-	-	-	-	-	-	-	-	-
33	Other	-	-	-	-	-	-	-	-	-	-	-	-	-
34	**TOTAL OTHER OPERATING**	$ 7,800	$ 7,800	$ 7,800	$ 7,800	$ 7,800	$ 7,800	$ 7,800	$ 7,800	$ 7,800	$ 7,800	$ 7,800	$ 7,800	$ 93,600
35	**TOTAL OPERATING COSTS**	$ 31,635	$ 29,835	$ 29,835	$ 29,835	$ 29,835	$ 29,835	$ 29,835	$ 29,835	$ 29,835	$ 29,835	$ 29,835	$ 29,835	$ 359,815
36	**NET OPERATING INCOME (LOSS)**	$ 4,982	$ 6,782	$ 6,782	$ 6,782	$ 6,782	$ 6,782	$ 6,782	$ 6,782	$ 6,782	$ 6,782	$ 6,782	$ 6,782	$ 79,585
37	**OPERATING MARGIN%**	13.61%	18.52%	18.52%	18.52%	18.52%	18.52%	18.52%	18.52%	18.52%	18.52%	18.52%	18.52%	18.11%
38	**NON OPERATING REVENUES (NET)**	-	-	-	-	-	-	-	-	-	-	-	-	-
39	**INCOME OR (LOSS)**	$ 4,982	$ 6,782	$ 6,782	$ 6,782	$ 6,782	$ 6,782	$ 6,782	$ 6,782	$ 6,782	$ 6,782	$ 6,782	$ 6,782	$ 79,585

Schedule 7 PROJECTED CASH FLOW STATEMENT for year one ending

	Month	1	2	3	4	5	6	7	8	9	10	11	12	TOTALS
1	**Net Operating Income (Sch. 6, Line 39)**	$ (16,417.92)	$ (12,401.26)	$ (10,184.59)	$ (7,967.92)	$ (5,751.26)	$ (3,534.59)	$ (1,317.92)	$ 898.74	$ 3,115.41	$ 5,332.08	$ 7,548.75	$ 9,765.41	$ (30,915.06)
	ADD: items that decrease income but do not decrease cash:													
2	Depreciation/Amortization	8	8	8	8	8	8	8	8	8	8	8	8	100
3	Increase in Accounts Payable	928	928	928	928	928	928	928	928	928	928	928	928	11,138
4	Decrease in Accounts Receivable	-	-	7,183	254	338	423	507	592	676	761	845	930	12,506
5	Other: Prepaid Expenses	71	71	71	71	71	71	71	71	71	71	71	71	853
6	Other: Expenses included line 14	1,800												1,800
7	**TOTAL ADDITIONS (lines 2-6)**	$ 2,807.58	$ 1,007.58	$ 8,190.08	$ 1,261.08	$ 1,345.58	$ 1,430.08	$ 1,514.58	$ 1,599.08	$ 1,683.58	$ 1,768.08	$ 1,852.58	$ 1,937.08	$ 26,396.90
	DEDUCT: items that increase income but do not increase cash:													
8	Increase in Accounts Receivable	2,394	4,788	254	338	423	507	592	676	761	845	930	1,014	13,520
9	Decrease in Accounts Payable	-	928	928	928	928	928	928	928	928	928	928	928	10,210
10	Other _____	-	-	-	-	-	-	-	-	-	-	-	-	-
11	Other _____	-	-	-	-	-	-	-	-	-	-	-	-	-
12	**TOTAL DEDUCTIONS (lines 8-11)**	$ 2,394.17	$ 5,716.53	$ 1,181.70	$ 1,266.20	$ 1,350.70	$ 1,435.20	$ 1,519.70	$ 1,604.20	$ 1,688.70	$ 1,773.20	$ 1,857.70	$ 1,942.20	$ 23,730.20
13	**Cash Flows from Operations (lines 1 plus 7 less 12)**	$ (16,004.51)	$ (17,110.21)	$ (3,176.21)	$ (7,973.05)	$ (5,756.38)	$ (3,539.71)	$ (1,323.05)	$ 893.62	$ 3,110.29	$ 5,326.95	$ 7,543.62	$ 9,760.29	$ (28,248.36)
	Other Uses of Cash													
14	Pre-Opening Cost (Sch1 line 14)	$ 4,505.00												4,505
15	Purchase of Equipment	-												-
16	Change in Inventory	-												-
17	Repayment of Principle on Loan	-	-	-										-
18	Other Non-Operating Uses	-												-
19	**Total Other Uses of Cash (14-18)**	$ 4,505.00	$ -	$ -	$ -	$ -	$ -	$ -	$ -	$ -	$ -	$ -	$ -	$ 4,505.00
20	**Total Cash Needs (19 minus 13)**	$ 20,509.51	$ 17,110.21	$ 3,176.21	$ 7,973.05	$ 5,756.38	$ 3,539.71	$ 1,323.05	$ (893.62)	$ (3,110.29)	$ (5,326.95)	$ (7,543.62)	$ (9,760.29)	$ 32,753.36
21	**Cumulative Cash Needs (Line 20 this month plus line 21 last month)**	$ 20,509.51	$ 37,619.73	$ 40,795.94	$ 48,768.99	$ 54,525.37	$ 58,065.08	$ 59,388.13	$ 58,494.51	$ 55,384.22	$ 50,057.27	$ 42,513.65	$ 32,753.36	
22	**Beginning Cash on Hand (ending cash last month line 28)**	$ 80,272.72	$ 59,763.20	$ 42,652.99	$ 39,476.78	$ 31,503.73	$ 25,747.35	$ 22,207.64	$ 20,884.59	$ 21,778.21	$ 24,888.50	$ 30,215.45	$ 37,759.07	$ 80,272.72
	OTHER SOURCES OF CASH													
23	Cash from Non-Related Loans	$ -												-
24	Cash from Owners/Investors													-
25	From Parent or Affiliated Entities													-
26	Other non-operating sources													-
27	**Total Other Sources of Cash (23-26)**	$ -	$ -	$ -	$ -	$ -	$ -	$ -	$ -	$ -	$ -	$ -	$ -	$ -
28	**CASH AVAILABLE AT END OF MONTH (line 27 plus 22 minus 20)**	$ 59,763.20	$ 42,652.99	$ 39,476.78	$ 31,503.73	$ 25,747.35	$ 22,207.64	$ 20,884.59	$ 21,778.21	$ 24,888.50	$ 30,215.45	$ 37,759.07	$ 47,519.36	$ 47,519.36

Schedule 7 PROJECTED CASH FLOW STATEMENT for year two ending

	Month	1	2	3	4	5	6	7	8	9	10	11	12	TOTALS
1	**Net Operating Income (Sch. 6, Line 39)**	$ 4,982.08	$ 6,782.08	$ 6,782.08	$ 6,782.08	$ 6,782.08	$ 6,782.08	$ 6,782.08	$ 6,782.08	$ 6,782.08	$ 6,782.08	$ 6,782.08	$ 6,782.08	$ 79,584.94
	ADD: items that decrease income but do not decrease cash:													
2	Depreciation/Amortization	8	8	8	8	8	8	8	8	8	8	8	8	100
3	Increase in Accounts Payable	928	928	928	928	928	928	928	928	928	928	928	928	11,138
4	Decrease in Accounts Receivable	1,014	1,099	1,099	1,099	1,099	1,099	1,099	1,099	1,099	1,099	1,099	1,099	13,098
5	Other Prepaid Expenses	71	71	71	71	71	71	71	71	71	71	71	71	853
6	Other _____													-
7	**TOTAL ADDITIONS (lines 2-6)**	$ 2,021.58	$ 2,106.08	$ 2,106.08	$ 2,106.08	$ 2,106.08	$ 2,106.08	$ 2,106.08	$ 2,106.08	$ 2,106.08	$ 2,106.08	$ 2,106.08	$ 2,106.08	$ 25,188.40
	DEDUCT: items that increase income but do not increase cash:													
8	Increase in Accounts Receivable	1,099	1,099	1,099	1,099	1,099	1,099	1,099	1,099	1,099	1,099	1,099	1,099	13,182
9	Decrease in Accounts Payable	928	928	928	928	928	928	928	928	928	928	928	928	11,138
10	Other _____	-	-	-	-	-	-	-	-	-	-	-	-	-
11	Other _____	-	-	-	-	-	-	-	-	-	-	-	-	-
12	**TOTAL DEDUCTIONS (lines 8-11)**	$ 2,026.70	$ 2,026.70	$ 2,026.70	$ 2,026.70	$ 2,026.70	$ 2,026.70	$ 2,026.70	$ 2,026.70	$ 2,026.70	$ 2,026.70	$ 2,026.70	$ 2,026.70	$ 24,320.40
13	**Cash Flows from Operations (lines 1 plus 7 less 12)**	$ 4,976.95	$ 6,861.45	$ 6,861.45	$ 6,861.45	$ 6,861.45	$ 6,861.45	$ 6,861.45	$ 6,861.45	$ 6,861.45	$ 6,861.45	$ 6,861.45	$ 6,861.45	$ 80,452.94
	Other Uses of Cash													
14	Pre-Opening Cost (Sch1 line 14)	-												-
15	Purchase of Equipment	-												-
16	Change in Inventory	-												-
17	Repayment of Principle on Loan													-
18	Other Non-Operating Uses	-												-
19	**Total Other Uses of Cash (14-18)**	$ -	$ -	$ -	$ -	$ -	$ -	$ -	$ -	$ -	$ -	$ -	$ -	$ -
20	**Total Cash Needs (19 minus 13)**	$ (4,976.95)	$ (6,861.45)	$ (6,861.45)	$ (6,861.45)	$ (6,861.45)	$ (6,861.45)	$ (6,861.45)	$ (6,861.45)	$ (6,861.45)	$ (6,861.45)	$ (6,861.45)	$ (6,861.45)	$ (80,452.94)
21	**Cumulative Cash Needs (Line 20 this month plus line 21 last month)**	$ 27,776.41	$ 20,914.95	$ 14,053.50	$ 7,192.05	$ 330.59	$ (6,530.86)	$ (13,392.31)	$ (20,253.77)	$ (27,115.22)	$ (33,976.67)	$ (40,838.13)	$ (47,699.58)	
22	**Beginning Cash on Hand (ending cash last month line 28)**	$ 47,519.36	$ 52,496.31	$ 59,357.76	$ 66,219.22	$ 73,080.67	$ 79,942.12	$ 86,803.58	$ 93,665.03	$ 100,526.48	$ 107,387.94	$ 114,249.39	$ 121,110.84	$ 47,519.36
	OTHER SOURCES OF CASH													
23	Cash from Non-Related Loans													-
24	Cash from Owners/Investors													-
25	From Parent or Affiliated Entities													-
26	Other non-operating sources													-
27	**Total Other Sources of Cash (23-26)**	$ -	$ -	$ -	$ -	$ -	$ -	$ -	$ -	$ -	$ -	$ -	$ -	$ -
28	**CASH AVAILABLE AT END OF MONTH (line 27 plus 22 minus 20)**	$ 52,496.31	$ 59,357.76	$ 66,219.22	$ 73,080.67	$ 79,942.12	$ 86,803.58	$ 93,665.03	$ 100,526.48	$ 107,387.94	$ 114,249.39	$ 121,110.84	$ 127,972.30	$ 127,972.30

THERAPEUTIC ASSISTED LIVING CORP.
SUMMARY OF SIGNIFICANT PROJECTION ASSUMPTIONS
August 2026 through 2028

NOTE 1 BUSINESS DESCRIPTION AND BASIS OF PRESENTATION

Business Description

Therapeutic Assisted Living Corp. (the "Home Health Business", the “Applicant”, or the “Company”, or the "Business"), a Florida Limited Liability Company, is acquiting an Adult Day Care.

Basis of Presentation

The financial projection (the “Projection”) presents, to the best of the knowledge and belief of management (“Management”) of the Applicant, the expected results of operations and cash flows for the initial application period and the years ending: **August 2026 through 2028** (the “Projection Period”).

The Projection has been prepared for purposes of obtaining licensure and is not intended to be a complete presentation of legal entity, its assets and liabilities, nor of its revenues and expenses.

The presentation using AHCA prescribed form # 3100-0009, July 2009 as designed and prescribed by AHCA to meet its needs, and there is a presumption that the required information is sufficient to provide information for the anticipated provider’s revenue and expenditures, the basis for financing anticipated cash-flow requirements of the provider, and an applicant’s access to contingency financing to be presented with AHCA. Accordingly, this projection may not be useful for other purposes.

A projection although similar to a forecast, is a presentation of prospective financial information that is subject to one or more hypothetical assumptions. Management has included several assumptions that are considered to be hypothetical assumptions.

Management’s hypothetical assumptions (the “Hypothetical Assumptions”) are as follows:

The Applicant is able to obtain all regulatory approvals; the Applicant is able to achieve the occupancy, payer mix, and average rates; the Applicant is able to maintain its projected operating structure and limit the additional expenses associated with operating the facility.

Accordingly, the Projection reflects Management’s judgement as of the date of the Projection, of the expected conditions and its expected course of action assuming the Hypothetical Assumptions. The assumptions disclosed herein, while not all-inclusive, are the assumptions which Management believes are significant to the Projection. The prospective results may not be achieved. Furthermore, even if the Hypothetical Assumptions were to occur, there will usually be differences between the projected and actual results, because events and circumstances frequently do not occur as expected, and those differences may be material.

NOTE 2 SUMMARY OF SIGNIFICANT ACCOUNTING POLICIES

Basis of Accounting

The Company maintains its accounting and financial records according to the accrual basis of accounting.

Use of Estimates

Estimates are used for, but not limited to, revenue, goodwill and asset impairments, self-insurance reserves, performance-based compensation, the allowance for credit losses, depreciation and amortization, leasing transactions, income taxes, and other contingencies. Although these estimates are based on management's best knowledge of current events and actions that the Company may undertake in the future, actual results may differ from the original estimates.

Cash and Cash Equivalents

The Company considers all short-term debt securities purchased with an original maturity of three months or less to be cash or cash equivalents.

Property, Plant and Equipment and Leasehold Intangibles, Net:

Property, plant and equipment and leasehold intangibles, net is recorded at cost. Depreciation and amortization are computed using the straight-line method over the estimated useful lives of the assets.

Expenditures for ordinary maintenance and repairs are expensed to operations as incurred. Renovations and improvements, which improve and/or extend the useful life of the asset, are capitalized, and depreciated over the estimated useful life of the renovations or improvements.

All tangible property with a useful life of more than one year and a unit acquisition cost of $2,500 or more will be capitalized and depreciated over its useful life using the straight-line method of depreciation. The company will expense the full acquisition cost of tangible property below these thresholds in the year of purchase.

Revenues Patient Fees:

Fees revenue is reported at the amount that reflects the consideration the Company expects to receive in exchange for the services provided. These amounts are due from patients or third-party payors and include variable consideration for retroactive adjustments from estimated reimbursements, if any, under reimbursement programs. Performance obligations are determined based on the nature of the services provided. Patients fee revenue is recognized as performance obligations are satisfied.

Gain (Loss) on Sale of Assets

The Company recognizes gain or loss from the sale of equity method investments when the transfer of control is complete, and the Company has no continuing involvement with the transferred financial assets.

Accounts Receivable:

Revenues are recorded at established rates in the period during which services are rendered. When there is a timing difference between revenues earned or incurred and collected, this timing difference is accounted for by recording receivables Accounts receivable are reported net of an allowance for credit losses to represent the Company's estimate of inherent losses at the balance sheet date.

Accounts Payable:

Expenses are recorded in the period in which is accrued and/or an invoice from the vendor is received. When there is a timing difference between expenses accrued or incurred and paid, this timing difference is accounted for by recording an Account Payable or a similar Payable Account.

Income Taxes:

Therapeutic Assisted Living Corp is a Florida Corporation, treated as an S-Corp for tax purposes. Under the provisions of the Internal Revenue Code and comparable state income tax law. As such, the Company is generally not subject to income taxes and the Company's net income, or loss is reported on the individual tax return of the members of the Company. Therefore, no provision or liability for income taxes is reflected in the financial statements.

Projected Pre-Opening Costs Assumptions:

The rented real estate property is in compliance with the codes and requirements of the county and the agency to operate as a Adult Day Care.

Fixtures, office/business equipment, furniture, appliances, inventory, merchandise, supplies, and any other asset of value that is intrinsic and extrinsic to said business will remain in the premises and used for business purposes.

NOTE 3 MANAGEMENT'S BASIS FOR PROJECTION OF REVENUES AND EXPENSES

Projected Charges Per Month Per Patient

Projected revenue consists of revenue from operating the Business. Future years were projected utilizing assumptions of average cost of care. The Facility will rely on Referral Agencies, Doctor's offices, Rehabilitation Centers, and Hospitals to acquire patients.

Employees

Personnel may allocate time to different roles and responsibilities. A full time equivalent employee ("FTE") is assumed to represent 2,080 hours of time paid annually. Employees will be hired using online recruiting services and/or agencies.

Rents and Leases:

The Company will lease the real estate from Flager County.

No Purchase Price: $0.00

The Adult Day Care is currently being operated by the Flager County and is will be transferred through a bidding process to the most competitive bidder.

THERAPEUTIC ASSISTED LIVING CORP.
AHCA PROOF OF FINANCIAL ABILITY TO OPERATE
Cash Needs & Source of Funds: Presentation of Proof of Fundings

The agency might require supporting documents, including but not limited to:

Proof of Funding Documents to Provide	**Amount (Min.)**
Minimum Cash Needs: Bank statements, letters of commitment, Invoices and Payment Confirmations, Other.	$ 80,273

Plastridge INSURANCE SINCE 1919

08/21/2026

RE: RFP 26-RFP-022 – Operation and Program Administration of the Flagler County Adult Day Care at the David I. Siegel Center, located at 1000 Belle Terre Blvd., Palm Coast, Florida/Therapeutic Assisted Living Corp.

To Flagler County,

This letter serves as confirmation that Therapeutic Assisted Living Corp is actively working with our agency to secure all necessary insurance coverages required by RFP 26-RFP-022 for Adult Day Care Services. These coverages will include:

- General Liability Insurance $1m/$2m Estimated Annual Premium $10k
- Professional Liability Insurance $1m/$1m Estimated Annual Premium Included with General Liability
- Worker's Compensation Insurance Statutory Limits Estimated Annual Premium $1,100
- Employers Liability $1m Estimated Annual Premium included in Workers Compensation Premium
- Auto Liability Insurance $1m Symbol 7,8,9 Estimated Annual Premium symbol 7 $6k and 7,8,9 $20k
- Pollution Liability Estimated Annual Premium $500
- AM Best "A-" rated or better
- The required policies and endorsements will be issued in compliance with Flagler County's additional insured, primary and non-contributory, and waiver of subrogation requirements as applicable under RFP 26-RFP-022
- Any additional insurance as required by the final contract terms

We confirm that our agency is prepared to issue these coverages immediately upon contract award and prior to the commencement of services. Should any additional documentation be required during the evaluation process, we will be pleased to provide it.

Sincerely,

Shelagh Grubb

Shelagh Grubb, CPCU, CIC

O: 800 290 1143 **D:** 561 819 1559 | **F:** 561 819 1656 I **C**: 407 235 5389

Plastridge Insurance Agency | Plastridge.com

Plastridge INSURANCE SINCE 1919
HEALTHCARE DIVISION

Flagler County Board of County Commissioners
General Business / Agenda Item 8.b.

Meeting Date:	October 5, 2026
Department Contact:	Joseph Hegedus, Health and Human Services Director
Subject:	**Consideration of Approval of Amended Interlocal Agreement Regarding Cold Weather Shelter Services and County Site Location Use.**

Overview/Summary:
Flagler County lacks a permanent shelter for those experiencing homelessness, and the issues associated with homelessness transcend political and jurisdictional boundaries. In 2020, Flagler County together with the cities of Bunnell, Palm Coast, and Flagler Beach entered into an Interlocal Agreement (ILA) to provide a Cold Weather Shelter (CWS) for those experiencing homelessness on cold nights (nights in which the temperature is predicted to drop below forty degrees Fahrenheit) to help address this situation collaboratively. Through the ILA, the compensation rate for the nonprofit vendor - Flagler County Family Assistance Center, Inc. d/b/a The Sheltering Tree - has remained the same for the past six (6) years while CWS attendance has doubled and operational costs have increased overall. The Sheltering Tree is requesting an amendment to the ILA to increase the cost-share to cover more of the operational expenses, along with other changes to update the ILA.

The amended ILA makes the following changes to the existing ILA (referred to as the First ILA):

1. Reference to the Church on the Rock has been removed given that it has been sold and is no longer a site for the shelter. A generic reference to the facility providing the services has been inserted in its place.
2. Reference to those living without heat has been added to account for those who have homes but who may need to use the Cold Weather Shelter.
3. The cost for services has been increased from $1,000 per night to $1,500 per night, with each jurisdiction being responsible for 25% of the per-night cost, or $375 per night.
4. The cap on number of days charged has been removed to account for the fact that the Cold Weather Shelter may be needed more than 24 nights a year. Nonetheless, each party's responsibility is capped at 25% of the total cost of the Cold Weather Shelter services. Staff projects not exceeding 30 nights, equating to an $11,250 contribution from each jurisdiction.

Additionally, it is important to note that the operating costs associated with the program are expected to exceed the $1,500/day reimbursement provided for in the ILA. This is due to the expense of providing materials and supplies that include bedding, food, and other programmatic items necessary to support the 20-30 nightly participants.

County staff continue to work with the vendor on the utilization of the new Fairgrounds Expo Hall as the preferred CWS location. Recently, the County and The Sheltering Tree staff conducted a walk-thru meeting at the Expo Hall, and all parties agreed that it would be a viable location for the CWS. As logistics to make this arrangement possible are addressed, staff will take the applicable steps necessary to solidify this arrangement.

Below is data from the past three years of shelter activations and operations:

FY 2025-26

- Activated 22 nights at a rate $1,000/night
- Total invoice = $22,000 divided by 4 = $5,500 cost to each jurisdiction
- Total shelter bed nights = 520 (one shelter bed night = one person using one bed for one single night)
- Average people/night = 24/night

FY 2024-25

- Activated 23 nights at $1,000/night
- Total invoice = $23,000 divided by 4 = $5,750 cost to each jurisdiction
- Total shelter bed nights = 497 (one shelter bed nights = one person using one bed for one single night)
- Average people/night = 22/night

FY 2023-24

- Activated 13 nights at $1,000/night
- Total invoice = $13,000 divided by 4 = $3,250 cost to each jurisdiction
- Total shelter bed nights = 127 (one shelter bed nights = one person using one bed for one single night)
- Average people/night = 10/night

Strategic Plan:
Focus Area: Effective Government
Goal 2 - Build & Maintain Relationships to Support Effective & Efficient Government
Objective EG 2.1: Create a culture of collaboration with municipalities and community partners.

Funding Information:
Funding for 20 nights is included in the FY 2026-27 Budget. If additional nights are required, staff will return to the Board to appropriate additional funding from the

municipalities through an Unanticipated Revenue Resolution and a budget transfer to cover the County's portion.

Recommendations:
Staff recommends that the Board approve the amended Interlocal Agreement among Flagler County, the City of Bunnell, the City of Flagler Beach, and the City of Palm Coast regarding the provision of Cold Weather Shelter services. Additionally, staff recommends approving the contracted vendor's use of the Expo Hall for CWS activated nights, to be memorialized via a Facility Use or similar agreement, approved as to form by the County Attorney's Office.

Attachments:
1. Amended Interlocal Agreement
2. 10.5.26 CWS ILA and Expo Hall PowerPoint FCG

INTERLOCAL AGREEMENT AMONG FLAGLER COUNTY, THE CITY OF BUNNELL, THE CITY OF FLAGLER BEACH, AND THE CITY OF PALM COAST, REGARDING THE PROVISION OF COLD WEATHER SHELTER SERVICES FOR THE HOMELESS

THIS INTERLOCAL AGREEMENT ("Agreement") is made and entered into between the Board of County Commissioners of Flagler County ("County"), a political subdivision of the State of Florida, the City of Bunnell, a Florida municipal corporation ("Bunnell"), the City of Flagler Beach, a Florida municipal corporation ("Flagler Beach"), and the City of Palm Coast, a Florida municipal corporation ("Palm Coast").

WHEREAS, Section 163.01, *Florida Statutes,* known as the "Florida Interlocal Cooperation Act of 1969," (hereinafter, the "Act") authorizes local governmental units to make the most efficient use of their powers by enabling them to cooperate with public agencies on a basis of mutual advantage and thereby to provide services and facilities in a manner and pursuant to forms of governmental organization that will accord best with geographic, economic, population, and other factors influencing the needs of local communities; and

WHEREAS, the Act permits agencies as defined therein to enter into interlocal agreements with each other to exercise jointly any power, privilege, or authority which such agencies share in common and which each might exercise separately; and

WHEREAS, by definition, homelessness is a public concern that traverses jurisdictional boundaries and therefore, the most effective solutions will involve intergovernmental coordination; and

WHEREAS, Flagler County lacks a permanent shelter for the homeless and, as such, has no permanent facility to provide sheltering services to the homeless or those living in homes within Flagler County that lack heat when the temperature is predicted to drop below forty degrees Fahrenheit, referred to hereinafter as "Cold Weather Shelter Services"; and

WHEREAS, on September 9, 2020, the County, Bunnell, Flagler Beach, and Palm Coast (hereinafter collectively referred to as the "Parties") entered into an interlocal agreement for the purpose of establishing a joint effort to provide Cold Weather Shelter Services for the residents of Flagler County (the "First ILA"); and

WHEREAS, since the Parties entered into the First ILA, attendance by those using the Cold Weather Shelter Services has roughly doubled with no corresponding change in the cost charged to the Parties, resulting in the County assuming responsibility for more than its pro rata share of the cost of same; and

WHEREAS, as the use of Cold Weather Shelter Services is anticipated to continue to grow, the Parties are desirous of entering into a new interlocal agreement, intended to replace the First ILA in its entirety, so as to account for this increased use and the prior

agreement of the Parties to share in the cost of Cold Weather Shelter Services equally.

NOW THEREFORE, in consideration of the above matters and the mutual covenants, promises and representations herein, the Parties hereto agree to create this Agreement to facilitate the sheltering of the homeless on cold nights:

A. COLD WEATHER SHELTER SERVICES

1. On nights in which the temperature is predicted to drop below forty degrees Fahrenheit, the County will provide a bus to pick up homeless individuals and those living in homes within Flagler County that lack heat who wish to avail themselves of the Cold Weather Shelter Services. These individuals will be transported to the facility providing the Cold Weather Shelter Services (the "Shelter"). Following such nights, the County will provide the same bus service to drop the individuals off. The Parties to this Agreement will coordinate to determine the best bus route and timing with the goal of reaching as many homeless individuals as practicable.

2. The County will pay the Shelter $1,500.00 (the "Sheltering Fee") for each night in which the Shelter administers the Cold Weather Shelter Services. The Sheltering Fee will cover the costs of utilizing the Shelter space, security, utilities, meals, and other costs of providing the Cold Weather Shelter Services. The Parties acknowledge that the County's commitment to pay the Shelter for the Cold Weather Shelter Services is unpredictable and, as such, agree that they will each be individually responsible for twenty-five percent (25%) of the Sheltering Fee, or $375 per night, the Cold Weather Shelter Services are provided by the Shelter.

3. On or before April 30th of each year, the County shall furnish invoices to Bunnell, Flagler Beach, and Palm Coast for twenty-five percent (25%) each of the total annual cost paid to the Shelter for the Cold Weather Shelter Services.

B. MISCELLANEOUS

1. The Parties agree to maintain, at no cost to the other Parties, adequate liability insurance covering their respective employees, officers, or agents and their activities against exposure to judgments that are within the limits of the waiver of sovereign immunity established by the State of Florida.

2. The Parties agree that each will be responsible for the negligent acts of its own employees, officers, or agents to the extent permitted by and subject to the monetary limitations identified in Chapter 768, *Florida Statutes.* This section shall not be construed as waiving any party's right of sovereign immunity pursuant to Section 768.28,

Florida Statutes, or any other provision of law, or as waiving any other defense or limitation which any of the Parties may have against any claim or cause of action by any person not a party to this Agreement. No rights are granted to third parties by this Agreement.

3. All notices provided under or pursuant to this Agreement shall be in writing, delivered either by hand or by first class, certified mail, return receipt requested, to the representatives identified below at the address set forth below:

Flagler County:	Flagler County Board of County Commissioners Attn: County Administrator 1769 East Moody Blvd, Building 2 Bunnell, Florida 32110
Bunnell:	City of Bunnell Attn: City Manager 2400 Commerce Parkway Bunnell, FL 32110
Flagler Beach:	City of Flagler Beach Attn: City Manager 105 S. 2nd Street Flagler Beach, FL 32136
Palm Coast:	City of Palm Coast Attn: City Manager 160 Lake Avenue Palm Coast, FL 32164

4. This Agreement may be modified or revised at any time by a written instrument duly authorized by the governing bodies of the Parties hereto.

5. This Agreement shall become effective upon execution by the Parties hereto and its filing with the Clerk of the Circuit Court in accordance with Section 163.01(11), *Florida Statutes.*

IN WITNESS WHEREOF, the Parties hereto have caused this Agreement to be executed the day and year below written.

[Signatures on following pages.]

APPROVED this ____ day of _____, 2026, by the Flagler County Board of County Commissioners.

FLAGLER COUNTY BOARD OF COUNTY COMMISSIONERS

ATTEST:

_____
Leann Pennington, Chair

_____
Tom Bexley, Clerk of the Circuit Court and Comptroller

APPROVED AS TO FORM:

_____
Sarah E. Spector, Assistant County Attorney

APPROVED this ____ day of _____, 2026, by the City of Bunnell, Florida.

CITY OF BUNNELL, FLORIDA

ATTEST:

_____
Catherine D. Robinson, Mayor

_____
Kristen Bates, City Clerk

APPROVED AS TO FORM:

_____
Paul Waters, City Attorney

APPROVED this ____ day of _____, 2026, by the City of Flagler Beach, Florida.

CITY OF FLAGLER BEACH, FLORIDA

ATTEST:

_____
Patti King, Mayor

_____
Penny Overstreet, City Clerk

APPROVED AS TO FORM:

_____
Drew Smith, City Attorney

APPROVED this ____ day of _____, 2026, by the City of Palm Coast, Florida.

CITY OF PALM COAST, FLORIDA

ATTEST:

_____
Mike Norris, Mayor

_____
Kaley Cook, City Clerk

APPROVED AS TO FORM:

_____
Marcus Duffy, City Attorney

Health and Human Services

Flagler County BOCC

October 5, 2026

General Business: 8c

Cold Weather Shelter: ILA Update and Expo Hall Use

Health and Human Services

Background

- Flagler County lacks a permanent shelter for those experiencing homelessness.
- Issues associated with homelessness transcend political and jurisdictional boundaries.
- In 2020, Flagler County, Cities of Bunnell, Palm Coast, and Flagler Beach entered an Interlocal Agreement (ILA) to provide a Cold Weather Shelter (CWS) for those experiencing homelessness on cold nights, to help address this situation collaboratively.

Health and Human Services

CWS Program

- Provides a meal, a cot, a safe/warm location for those needing warmth.
- Shelter activates when temperatures reach 40 F degrees or below.
- Transportation to/from the CWS provided from set pick up locations.



Health and Human Services

Recent Program Data

•<u>FY2025-26</u>
•Activated 22 nights @ $1000/night
•Total grant invoice = $22,000 divided by 4 = $5,500 cost to ea. jurisdiction
•Total shelter bed nights* = 520
•Average people/night = 24/night

<u>FY2024-25</u>
•Activated 23 nights @ $1000/night
•Total grant invoice = $23,000 divided by 4 = $5,750 cost to ea. jurisdiction
•Total shelter bed nights = 497
•Average people/night = 22/night

<u>FY2023-24</u>
•Activated 13 nights @ $1000/night
•Total grant invoice = $13,000 divided by 4 = $3,250 cost to ea. jurisdiction
•Total shelter bed nights = 127
•Average people/night = 10/night

*one shelter bed night = one person using one bed for one single night

Health and Human Services

Current ILA

- Splits cost of shelter among 4 jurisdictions.
- Allows up to 24 nights, at compensation to vendor of $1000/night.
- County administers on behalf of ILA and bills jurisdictions at end of season.

Health and Human Services

Proposed ILA Updates

- Reference to the Church on the Rock removed as no longer a site for the shelter.
- Reference to, and access for, those living without heat has been added.
- The cost for services is proposed to increase, from $1,000 per night to $1,500 per night, with each jurisdiction being responsible for 25% of the per-night cost, or $375 per night.
- The cap on number of days has been removed to account for the fact that the Cold Weather Shelter may be needed more than 24 nights a year. Nonetheless, each party's responsibility is capped at 25% of the total cost of the Cold Weather Shelter services. (Staff projects not exceeding 30 nights, equating an $11,250 contribution from each jurisdiction.)

Expo Hall Shelter Use

- Staff met with CWS operator to review idea of using Expo Hall/Evacuation Shelter for this program.
- All aspects seem feasible and the shelter could effectively utilize the space on activated night, with BOCC approval.
- If approved, Staff will pursue executing Facility Use Agreement with the CWS operator to affirm all details.

Flagler County Board of County Commissioners
Public Hearings / Agenda Item 9.a.

Meeting Date: October 5, 2026
Department Contact:
Subject: **QUASI-JUDICIAL – Project No. 2025080063 – Request for an Appeal of the Planning and Development Board's Decision Denying a Variance from the Minimum Required Streetside (West) Setback and Maximum Lot Coverage Requirement for a Pump House in the R/C (Residential/Limited Commercial) District at 3 Pelican Lane.** Parcel Number: 23-11-31-5300-00000-0130; 7,500+/- square feet (0.17+/- acres). Owners: Raymond R. Royer, Jr., and Janice L. Paxson/Applicant: Raymond R. Royer, Jr. (AR No. 6743).

Overview/Summary:
An appeal was filed by the Owners on August 25, 2026 related to the Planning and Development Board's most recent variance denial for variances related to the construction of a pool, pool deck, and pump house at 3 Pelican Lane. Specifically, the Appellants'/Owners' most recent appeal requests:

> "To alleviate the hardship created by only approving a 4' structure height and my pool pump house/shed inclosure [*sic*]. My application has always maintain [*sic*] the request of 10' and the building plans are to build 9'7" height with 5" buffer to not exceed 10' height. My last return zoning and planning hearing resulted in a tie to approve, a tie to disapprove and 20 minutes [illegible] to the forced [sic] to make a vote 4-2. I also present [*sic*] a professional opinion letter that stated very clearly that my request to codes. History 7 No's, 8 ties [*sic*] 4 to 2 Jan 12, 2026. TRC, has stated height is 12'. I also stated at the zoning and planning hearing that the professional stated to me the lowest I can go is 9'3" but my 10' height request remains."

The appeal application cites the Planning and Development Board's Order No. 5921-A from its August 11, 2026 regular meeting, where the Board voted 4-2 on a motion to deny on the basis that the requested variance is not the minimum relief necessary to alleviate the hardship.

This is Mr. Royer's third appeal to the Board of County Commissioners. His first and second appeals – like this appeal – sought the elimination of the Planning and Development Board's four-foot height limitation on the proposed pump house, with all other requested variances for the pool and pool deck's location and a variance to exceed lot coverage all approved by the Planning Board at its February 11, 2025 regular meeting. The Planning and Development Board's approval (vote on the motion was unanimous) stated:

> "The Planning and Development Board find that all the variance criteria as listed in

the guidelines at Land Development Code Section 3.07.03.E have been met and therefore approves Project No. 2024110031 for 3.49 foot rear (North) variance from the minimum required 10 foot rear setback for a pool and pool deck, a 25 foot left streetside (West) variance from the minimum required 25 foot streetside setback for a pool and pool deck, a 22- foot left streetside (West) variance from the minimum required 25- foot streetside setback for a pump house, a 0.82 percent lot coverage variance from the maximum allowed 35 percent lot coverage at 3 Pelican Lane (Parcel No. 23-11-31-5300-00000-0130), subject to the following condition:

1. The pump house is to be within the boundaries of the block wall (pool barrier) and not taller than 4 feet in height."

This first appeal was heard by the Board of County Commissioners at its May 5, 2025 regular meeting. After considering the appeal request, the Board denied (on a unanimous vote) the appeal (as copied below from the approved meeting minutes):

> "A motion was made by Commissioner Hansen to deny the appeal on the basis that the Planning and Development Board's decision was supported by competent substantial evidence, the [*sic*] due process was accorded to the applicant, and the essential requirements of law, primarily the four criteria for variances within the LDC, have been observed. Seconded by Commissioner Carney. Chair Dance called the question. Motion carried unanimously."

Unlike other land use requests, variance requests are not time-barred: a reapplication could be made at any time, and the Board's comments from the May 5, 2025 meeting concluded with this acknowledgement (again from the minutes):

> "Chair Dance noted Mr. Royer would have to re-apply, bring additional evidence, and modify his plan."

Mr. Royer did file a subsequent variance application (Project No. 2025050043), which was ultimately denied at the Planning and Development Board's August 12, 2025 regular meeting following a tie vote (2-2) on a motion to approve. At that time, staff determined that a tie vote results in a denial of the request (see Order No. 5689). Due to discrepancies in the vote (and the County's hearing process) from the August Planning Board meeting, Mr. Royer was allowed by staff to reapply for his variance requests without requiring an application fee, seeking (according to his application):

> "Hardship relief on undersize lot, variance relief for pool housing structure: on height roof coverage."

The Planning and Development Board considered his third variance application at the Board's September 9, 2025 regular meeting, which again ended in a denial – a 3-3 tie vote on a motion to approve – of his variance requests, which Staff determined at the time to be a denial. Mr. Royer had requested that County staff allow this appeal application to be submitted without an application fee, which was rejected by County staff: this delayed his appeal application submittal.

This second appeal was heard by the Board of County Commissioners at its January 12, 2026 regular meeting. After considering the appeal request, the Board (on a unanimous vote) remanded the appeal back to the Planning and Development Board on the basis that a tie vote is not the basis of denial (as copied below from the Board of County Commissioners Order No. 6024):

> "The Board of County Commissioners found that the essential requirements of the law – including primarily the four Criteria for Variances within the LDC – have been observed by the Planning and Development Board. However, the Board's denial of the application request – due to the tie vote – necessitates the Board's reconsideration of the variance application for reconsideration of the variance request inclusive of the increase in height of the pump house accessory structure to 9 feet, 7 inches, finding the request meets the criteria for approval of variance under the LDC."

The application was reheard at the April 14, 2026 Planning and Development Board regular meeting (with the delay at the request of the applicant). An initial motion to approve failed 3-3. A subsequent motion to deny failed 3-3. The Board was reminded by Staff that a motion that ends in a tie is not the basis of either an approval or denial, and that a majority vote on a motion was required. Following Board discussion with the Applicant regarding a possible compromise on the request, it was suggested that the Applicant move the structure to the rear of the property in line with the house. A final motion to continue the request to the August 11, 2026 Regular Meeting (vote on the motion was unanimous) stated:

> "The Planning and Development Board continues the variance request to give the applicant time to modify the application. Continuing the variance request to the August 11th Planning and Development Board haring [*sic*] will preserve public notice and provide an opportunity for staff or the applicant to provide additional information."

By the August 11, 2026 regular meeting, the applicant had not amended his request. The day of the meeting, the applicant provided an Engineering Evaluation Report competed by LAV Engineering, PLLC and dated August 10, 2026. Due to the late submittal, it was not included in the Staff Report or Staff Presentation but was provided to the Board and the Board Secretary for the record. An initial motion to approve failed 3-3. A subsequent motion to deny failed 3-3. Staff reminded the Board that a motion that ends in a tie is not the basis of either an approval or denial, and that per the LDC, they were limited to one continuance which had already been use. A final motion to deny passed by majority vote 4-2 and stated:

> "The Planning and Development Board finds that all the variance criteria as listed in the guidelines at Land Development Code Section 3.07.01.E have not been met, that the requested variance is not the minimum relief necessary to alleviate the hardship, and therefore denies Project No. 2025080063 for a 22.34 left (West) street

side setback variance from the minimum required 25-foot street side setback and 1.2 percent lot coverage variance from the maximum allowed 35 percent lot coverage for a pump house at 3 Pelican Lane (Parcel No. 23-11-31-5300-00000-0130)."

As a reminder to the Board, the subject parcel lies on the North side of Pelican Lane, East of Mockingbird Lane):



The Board of County Commissioners is the appellate authority following a decision by the Planning and Development Board pursuant to Section 3.07.03.C.1 of the Land Development Code. In turn, the decision of the Board of County Commissioners may ultimately be appealed to the Circuit Court. It is noted that the Board's denial of Mr. Royer's original appeal was not further appealed to the Circuit Court.

The appeal must be reviewed based on the record presented at the Planning and Development Board meetings and also argument of the appellant before the County Commission. No new evidence or testimony may be provided. In deciding, the Board of County Commissioners must make three determinations:

-Whether the Planning and Development Board's decision was supported by

competent substantial evidence;
-Whether due process was accorded; and
-Whether the essential requirements of law (primarily, the four Criteria for Variances within the LDC) have been observed.

As a variance request, the necessary detail is provided to the Planning and Development Board through a site plan. Initial site plan requirements for both variances and special exceptions are listed at LDC Section 3.07.03.A.2. The Planning and Development Board considered the applicants' site plans, which are included in the back up material attached hereto. It is noted that the day of the August 11, 2026 Planning and Development Board meeting, the applicant provided an Engineering Evaluation Report competed by LAV Engineering, PLLC and dated August 10, 2026.

Specific to variances, the LDC requires (at LDC Sec. 3.07.03.E.) demonstration that the four variance guidelines are considered by a variance applicant, with these guidelines typically depicted on a site plan and through a written narrative (and where "the board [Planning and Development Board] shall be guided by the following"):

> "Variance guidelines. A variance may be granted from the terms and provisions of this article where, owing to special conditions relating to the property, a literal enforcement of the provisions of this article will, in an individual case, result in unnecessary hardship. Variances may be granted by the Planning and Development Board in such an individual case of unnecessary hardship upon a written finding based on competent, substantial evidence in the official record that:
>
> 1. There are extraordinary and exceptional conditions pertaining to the particular piece of property in question because of its size, shape, topography, or other unique features that, when considered in whole or in part, creates an unnecessary hardship; and
> 2. Such conditions were not created by the affirmative actions of the applicant and the applicant has acted at all times in good faith; and
> 3. The variance, if granted, would not cause substantial detriment to the public health, welfare, safety, and morals of the community or impair the purpose and intent of this article; and
> 4. No variance may be granted for a use of land or building that is not permitted by this article.
>
> A variance, if granted, shall be the minimum variance necessary to alleviate the hardship. For purposes of this section, an unnecessary hardship shall mean that without the granting of the variance the owner will be deprived of all reasonable use of the property as allowed in the zoning district."

The Planning and Development Board's findings regarding these criteria are stated in the Planning Board's Order regarding the variance and are reflected in the Planning Board's technical staff report attached to this report.

It is assumed that the Appellants' appeal request claims that the four (4) foot-height limitation originally imposed on the pump house (through the original variance approval) deprives him of his use of the pump house in the intended manner. However, the final paragraph of the Variance guidelines listed above states, ***"A variance, if granted, shall be the minimum variance necessary to alleviate the hardship.***" (Emphasis added). The Planning and Development Board's intent with the imposed condition was to ensure that the granted variances were the minimum variances necessary to alleviate the hardship, providing space for a pump house but arguably not for housing pool furniture.

This appeal iteration alleges that the "Owners will be deprived of all reasonable use of the property as allowed in the zoning district." Staff counters that the Planning Board's decision – a denial preceded with two tie-votes – was indicative of the difficulty posed by his request, where the Planning Board seeks to balance reasonable requests for relief from the strict application of the Land Development Code's requirements with limitations that respect the adjacent neighborhood and uphold the Code's intent to protect the health, safety, and general welfare. In staff's opinion, the Planning Board correctly weighed the evidence and testimony provided in the variance application and at the public hearing and, ultimately, came to a majority consensus resulting in denial. Additionally, the deprivation of "all reasonable use" is not the end result. The previously granted variances – inclusive of the pump house height limitation – provided for the proposed pool development. In the end, the "reasonable use" was not deprived, but instead it was conditioned on a requirement to limit the pump house height. The appeal goes on to state that: "TRC, has stated height is 12'." This is correct, but the Planning Board opted to restrict the pump house height to less than 12 feet as a condition of granting the requested variances. This is the Board's prerogative: if the pump house can be placed on the parcel without the variances, then the 12-foot height applies. The appeal now appears to seek a 10' pump house height, providing a buffer for the previously intended 9' 7" height: "My application has always maintain [*sic*] the request of 10' and the building plans are to build 9' 7" height with 5" buffer not to exceed 10'." The Board heard this proposal, and the vote – effectively considered at two separate consecutive meetings – resulted in a majority vote for a denial at the final Planning and Development Board meeting.

This agenda item is:
__X__ quasi-judicial, requiring disclosure of ex-parte communication; or
_____ legislative, not requiring formal disclosure of ex-parte communication.

Strategic Plan:
Focus Area: Effective Government
Goal 2 – Build & Maintain Relationships to Support Effective & Efficient Government
Objective EG 2.4: Establish joint strategies to identify and address needs through leveraging of local resources.

Funding Information:
N/A

Recommendations:

OPTIONS FOR THE BOARD: As a reminder, the Board of County Commissioners is sitting in an appellate capacity as it relates to this matter. It is limited by LDC Section 3.07.03.C. to determining whether:

1. The Planning and Development Board's decision was supported by competent, substantial evidence;
2. Whether due process was accorded; and
3. Whether the essential requirements of the law have been observed.

The Board of County Commissioners may take ONE of the following actions:

1. APPROVE the Appeal request, overturning the Planning and Development Board's denial of the Variances for the Pool, Pool Deck, and Pump House in the R/C (Residential/Limited Commercial Use) District at 3 Pelican Lane. With this course of action, the Board of County Commissioners will be **OVERTURNING** the decision of the Planning and Development Board's denial of the new variance requests and thus the condition to limit the height of the proposed Pump House to four (4) feet. The Board of County Commissioners will need to set the maximum height of the Pump House; otherwise, the maximum height will be limited to a maximum height of twelve (12) feet.

2. DENY the Appeal request, upholding the Planning and Development Board's denial of the Variance – and thus the condition to limit the height of the proposed Pump House to four (4) feet at 3 Pelican Lane. With this course of action, the Board of County Commissioners will be **AFFIRMING** the Planning and Development Board's decision to grant the Variance *with the condition as to the Pump House as originally imposed by the Planning and Development Board.*

3. REMAND the Variance denial back to the Planning and Development Board for further proceedings with direction on how the Planning and Development Board failed to base its decision on competent substantial evidence, accord due process, and/or observe the essential requirements of law. The Variance use is held in abeyance until the Planning and Development Board renders a decision on the Variance as remanded.

4. CONTINUE the Board of County Commissioners' review of the appeals to a time and date certain. A continuance should be for the appellants or for staff to provide additional information to the Board of County Commissioners.

Attachments:

1. Application for Appeal of Planning and Development Board's Decision
2. PDB Order No. 5921-A
3. January 12, 2026 BCC regular meeting minutes (in part)
4. BCC Appeal Order (January 12, 2026)
5. April 14, 2026 PDB Staff Report and Backup (in part)
6. April 14, 2026 PDB regular meeting minutes (in part)
7. August 11, 2026 PDB Staff Report and Backup
8. August 11, 2026 PDB regular meeting minutes (in part)
9. Public Notice
10. Public comment received after initial agenda posting

APPLICATION FOR APPEAL OF PLANNING AND DEVELOPMENT BOARD DECISION

FLAGLER COUNTY, FLORIDA
1769 E. Moody Boulevard, #2
Bunnell, FL 32110
Telephone: (386) 313-4009

Application/Project #: 2025080863

APPEAL INFORMATION

Appellant Name: Raymond R. Royer Jr.

SUBJECT OF APPEAL:	
APPLICATION #:	
HEARING DATE:	
BOARD DECISION:	

PROVIDE SPECIFIC BASIS FOR APPEAL: To alleviate the hardship created by only approving a 4' structure height and my pool pump house/shed inclosure. My application has always maintain the request of 10' and the building plans are to build ~~10~~ 9'7" height with 5" buffer not to exceed 10' height.

My case before Zoning and Planning Hearings resulted in a tie to approve a tie to disapprove and 20 minute arguments to the forced to make a vote 4-2.

I also present a professional opinion letter that stated very clearly that my request to codes.

Signature of Appellant

02/25/2026
Date

History 7 No's, 8 ties 4 to 2 Jan 12, 2026

TRC, has stated height is 12'

I also stated at the Zoning and Planning Hearings that the professional stated to me the lowest I can go is 9'3" but my 10' height request remains.

APPLICATION FOR APPEAL OF PLANNING AND DEVELOPMENT BOARD DECISION

FLAGLER COUNTY, FLORIDA
1769 E. Moody Boulevard, #2
Bunnell, FL 32110
Telephone: (386) 313-4009

INTERNAL CONTACT SHEET

APPELLANT INFORMATION:	
	Name(s): Raymond R. Royer Jr.
	Email: fatboy66ptd.net
	Phone Number: (610) 636-5826
	Mailing Address: 3 Pelican Lane
	City: Flagler Beach State: FL Zip: 32136

APPLICATION FOR APPEAL OF PLANNING AND DEVELOPMENT BOARD DECISION

FLAGLER COUNTY, FLORIDA
1769 E. Moody Boulevard, #2
Bunnell, FL 32110
Telephone: (386) 313-4009

Fees – Ord. 2008-31

Payable for Flagler County BOCC via Check or online through the application portal.
Application Fee: $150

Appeal of Planning and Development Board Decision. *(LDC Section 3.07.03.C)*

1. Within thirty (30) days of the rendering of a decision by the planning and development board regarding a requested variance and/or special exception, an appeal may be filed with the board of county commissioners. Such appeal may be filed by the original applicant, the planning and zoning director, other county staff as authorized, or a real property owner within three hundred (300) feet of the perimeter of the subject property who has standing. To have standing for an appeal, a real property owner must have participated in the matter before the planning and development board, either by speaking on the record at the public hearing or by having written communication entered into the record for the planning and board's consideration.
2. The application for appeal shall be filed with the planning and zoning director who shall schedule a hearing on the appeal with the board of county commissioners.
3. The board of county commissioners shall apply an appellate standard of review when it evaluates the planning and development board's decision. It shall review the record that was established at the planning and development board hearing below. The appellant and other interested parties with standing that have been permitted to intervene may present oral argument on the established record, but not new testimony or other evidence shall be taken.
4. The board of county commissioners shall render a decision on the appeal to determine whether: (1) the planning and development board's decision was supported by competent, substantial evidence; (2) whether due process was accorded; and (3) whether the essential requirements of the law have been observed. The board of county commissioners, in reviewing the decision of the planning and development board, may either: affirm the planning and development board's decision; may remand the matter for further proceedings with direction on how the planning and development board failed to comply with the above standards; or may overturn the decision of the planning and development board, thereby granting the petition. If an appeal is remanded to the planning and development board, then it shall only consider and take action based upon the direction from the board of county commissioners indicating how the planning and development board failed to comply with the above standards. A decision to affirm or overturn the Planning and Development board's decision by the Board of County Commissioners under this section shall be deemed final, and may be appealed to the Circuit Court of the County by writ of certiorari as provided by law.
5. Automatic stay. No permits shall be issued for construction or development pursuant to a Planning and Development Board decision until the thirty (30) day time limit for an appeal to the Board of County Commissioners has lapsed with no properly filed notice of appeal or, if an appeal has been timely and properly filed, until the Board of County Commissioners has rendered a final decision thereon.

NOTE: Pursuant to Section 286.0105 of Florida Statutes, the Flagler County Planning Board hereby notifies all interested persons that if a person decides to appeal any decision made by the Planning Board with respect to any matter considered at such meeting or hearing, he or she will need a record of the proceedings, and for such purpose, he or she may need to ensure that a verbatim record of the proceedings is made which record includes the testimony and evidence upon which the appeal is to be based.

By signing below, I acknowledge that I have fully read and understand the Application Process.

Signature of Appellant

08/25/2026
Date

Instrument No: 2026033717 8/19/2026 3:14 PM BK: 3080 PG: 925 PAGES: 2 -
RECORDED IN THE OFFICIAL RECORDS OF Tom Bexley, Clerk of the Circuit Court & Comptroller Flagler, FL

FLAGLER COUNTY
PLANNING AND DEVELOPMENT BOARD ORDER NO. 5921-A
PROJECT NO. 2025080063

Owner:	Raymond R. Royer Jr. and Janice L. Paxson
Applicant:	Raymond R. Royer Jr.
Location:	3 Pelican Lane, Flagler Beach, FL 32136
Parcel #:	23-11-31-5300-00000-0130
Legal Description:	Lot 13 and the South 8 feet of Lot 16, River Beach, according to the map or plat thereof as recorded in Plat Book 5, Page 36, Public Records of Flagler County, Florida
Request:	This request is for a 22.34' left (West) street side setback variance from the minimum required 25 foot street side setback and a 1.2 percent lot coverage variance from the maximum 35 percent lot coverage in the R/C (Residential/Limited Commercial Use) district at 3 Pelican Lane.

Section 1. **Findings.**

In accordance with Section 3.07.03. of the Flagler County Land Development Code, the Planning and Development Board initially considered the application at their regular meeting on September 9, 2025, rendering Order No. 5921 (Recorded at Official Records Book 2991, Page 1571, Public Records of Flagler County, Florida) denying the requests on a tie vote. The Board of County Commissioners, on appeal, considered the application at their regular meeting on January 12, 2026, rendering Order No. 6024 (Recorded at Official Records Book 3034, Page 754, Public Records of Flagler County, Florida) remanding the requests back to the Planning and Development Board. The Planning and Development Board heard the remanded requests at their regular meetings on April 14, 2026 and August 11, 2026. Following consideration of the testimony and evidence in the record presented by staff and the parties, other written documentation of record, and comments made during the public hearing portions of the proceedings, the Planning and Development Board finds that the Owner does not meet the criteria of Section 3.07.03.E.1. through 4, and more specifically that the request is not the minimum relief necessary to alleviate the hardship.

Section 2. **Denied.**

Based on the foregoing and following the August 11, 2026 hearing of the Planning and Development Board, the requested variances stated above are denied on the basis that the request does not meet the variance criteria as listed in the Land Development Code, and more specifically that the request is not the minimum relief necessary to alleviate the hardship.

Section 3. **Appeal Rights.**

An aggrieved party, including the local governing body, may appeal a Planning and Development Board's order regarding a variance request to the Board of County Commissioners of Flagler County. The appeal shall be conducted in accordance with Section 3.07.03.C. of the Land Development Code. The original application for appeal, accompanied by the required one hundred fifty dollar ($150.00) application fee, with the cost of any required public notice to be borne by the applicant, shall be filed with the Planning and Zoning Director no later than thirty (30) calendar days of the rendition date shown below.

SO ORDERED AND RENDERED, this 19th day of AUGUST 2026, by the Planning and Development Board of Flagler County, Florida, by and through its Chairman.

FLAGLER COUNTY
PLANNING AND DEVELOPMENT BOARD

ATTEST:

Hannah Lademann, Board Secretary

Mark Langello, Chairman

Approved as to Form:

Sarah Spector, Assistant County Attorney

CERTIFICATE OF SERVICE

PLANNING AND DEVELOPMENT BOARD ORDER NO. 5921-A
PROJECT NO.: 2025080063

As Secretary to the Planning and Development Board, I hereby certify that on this 19th day of August, 2026, copies of this Planning and Development Board Order No. 5921-A were mailed first class, postage prepaid or sent by inter-office government mail to the following:

Raymond R. Royer Jr. and Janice L. Paxson
3 Pelican Lane
Flagler Beach, FL 32136

Attested by: _____
Hannah Lademann, Board Secretary

ITEM 9B – THIS ITEM WILL NOT BE HEARD: QUASI-JUDICIAL – PROJECT NO. 2025080074 – REQUEST FOR A REZONING FROM THE AC (AGRICULTURAL) DISTRICT TO THE PUD (PLANNED UNIT DEVELOPMENT) DISTRICT. PARCEL NUMBERS: 28-12-31-0000-01010-0000 AND 29-12-31- 0000-01010-0000; PARCEL SIZE: 119+/- ACRES. OWNER: MPC LOTS LLC/APPLICANTS: RICHARD SMITH AND NIKA HOSSEINI. (AR NO. 5931)

There has been a request for the BOCC to open and continue to the Board's March 16, 2026, Regular Meeting at 5:30 p.m.

ITEM 9C – QUASI-JUDICIAL – PROJECT NO. 2025080063 – REQUEST FOR AN APPEAL OF THE PLANNING AND DEVELOPMENT BOARD'S DECISION DENYING VARIANCES FROM THE MINIMUM REQUIRED REAR SETBACK, MINIMUM REQUIRED STREETSIDE (WEST) SETBACK, AND MAXIMUM LOT COVERAGE REQUIREMENT FOR A PROPOSED POOL, POOL DECK, AND PUMP HOUSE IN THE R/C (RESIDENTIAL/LIMITED COMMERCIAL) DISTRICT AT 3 PELICAN LANE. PARCEL NUMBER: 23-11- 31-5300-00000-0130; 7,500+/- SQUARE FEET (0.17+/- ACRES). OWNERS: RAYMOND R. ROYER, JR., AND JANICE L. PAXSON/APPELLANT: RAYMOND R. ROYER, JR./AGENT: PETER R. MCGRATH, ESQ. (AR NO. 6024)

This item was requested by Adam Mengel, Growth Management Director:

THIS SPACE INTENTIONALLY LEFT BLANK

(Item 9c – Continued)

FLAGLER COUNTY BOARD OF COUNTY COMMISSIONERS
PUBLIC HEARING/AGENDA ITEM #9c

SUBJECT: QUASI-JUDICIAL – Project No. 2025080063 – Request for an Appeal of the Planning and Development Board's Decision Denying Variances from the Minimum Required Rear Setback, Minimum Required Streetside (West) Setback, and Maximum Lot Coverage Requirement for a Proposed Pool, Pool Deck, and Pump House in the R/C (Residential/Limited Commercial) District at 3 Pelican Lane. Parcel Number: 23-11-31-5300-00000-0130; 7,500+/- square feet (0.17+/- acres). Owners: Raymond R. Royer, Jr., and Janice L. Paxson/Appellant: Raymond R. Royer, Jr./Agent: Peter R. McGrath, Esq. (AR No. 6024).

DATE OF MEETING: January 12, 2026

OVERVIEW/SUMMARY: This request is quasi-judicial in nature and requires disclosure of ex parte communication.

An appeal was filed by the Owners on October 16, 2025, related to the Planning and Development Board's most recent variance denial for variances related to the construction of a pool, pool deck, and pump house at 3 Pelican Lane. Specifically, the Appellants'/Owners' most recent appeal requests:

> "Owners will be deprived of all reasonable use of the property as allowed in the zoning district. At the Technical Review Committee (TRC) which two reviews stated this application property R/C District can go to 12' high on the proposal structure. Applications requested in February to request 10' high as a buffer. But matching the residential home the owners would try reaching a 9'7" gable roof for pleasing appeal."

The appeal application cites the Planning and Development Board's Order No. 5921 from its September 9, 2025, regular meeting, where the Board's decision is provided by the appellant as: "3-3 vote in favor of approval (tie vote results in a denial of the request)."

This is Mr. Royer's second appeal to the Board of County Commissioners. His first appeal – like this appeal – sought the elimination of the Planning and Development Board's four-foot height limitation on the proposed pump house, with all other requested variances for the pool and pool deck's location and a variance to exceed lot coverage all approved by the Planning Board at its February 11, 2025, regular meeting. The Planning and Development Board's approval (vote on the motion was unanimous) stated:

> "The Planning and Development Board find that all the variance criteria as listed in the guidelines at Land Development Code Section 3.07.03.E have been met and therefore approves Project No. 2024110031 for 3.49 foot rear (North) variance from the minimum required 10 foot rear setback for a pool and pool deck, a 25 foot left streetside (West) variance from the minimum required 25 foot streetside

(Item 9c – Continued)

FLAGLER COUNTY BOARD OF COUNTY COMMISSIONERS
PUBLIC HEARING/AGENDA ITEM #9c

setback for a pool and pool deck, a 22-foot left streetside (West) variance from the minimum required 25-foot streetside setback for a pump house, a 0.82 percent lot coverage variance from the maximum allowed 35 percent lot coverage at 3 Pelican Lane (Parcel No. 23-11-31-5300-00000-0130), subject to the following condition:

1. The pump house is to be within the boundaries of the block wall (pool barrier) and not taller than 4 feet in height."

This first appeal was heard by the Board of County Commissioners at its May 5, 2025, regular meeting. After considering the appeal request, the Board denied (on a unanimous vote) the appeal (as copied below from the approved meeting minutes):

> "A motion was made by Commissioner Hansen to deny the appeal on the basis that the Planning and Development Board's decision was supported by competent substantial evidence, the [sic] due process was accorded to the applicant, and the essential requirements of law, primarily the four criteria for variances within the LDC, have been observed. Seconded by Commissioner Carney. Chair Dance called the question. Motion carried unanimously."

Unlike other land use requests, variance requests are not time-barred: a reapplication could be made at any time, and the Board's comments from the May 5, 2025, meeting concluded with this acknowledgement (again from the minutes):

> "Chair Dance noted Mr. Royer would have to re-apply, bring additional evidence, and modify his plan."

Mr. Royer did file a subsequent variance application (Project No. 2025050043), which was ultimately denied at the Planning and Development Board's August 12, 2025, regular meeting following a tie vote (2-2) on a motion to approve: a tie vote results in a denial of the request (see Order No. 5689). Due to discrepancies in the vote (and the County's hearing process) from the August Planning Board meeting, Mr. Royer was allowed by staff to reapply for his variance requests without requiring an application fee, seeking (according to his application):

> "Hardship relief on undersize lot, variance relief for pool housing structure: on height roof coverage."

The Planning and Development Board considered his third variance application at the Board's September 9, 2025, regular meeting, which again ended in a denial – a 3-3 tie vote on a motion to approve – of his variance requests. Mr. Royer had requested that County staff allow this appeal application to be submitted without an application fee, which was rejected by County staff: this delayed his appeal application submittal.

(Item 9c – Continued)

FLAGLER COUNTY BOARD OF COUNTY COMMISSIONERS
PUBLIC HEARING/AGENDA ITEM #9c

As a reminder to the Board, the subject parcel lies on the North side of Pelican Lane, East of Mockingbird Lane):



The Board of County Commissioners is the appellate authority following a decision by the Planning and Development Board pursuant to Section 3.07.03.C.1 of the Land Development Code. In turn, the decision of the Board of County Commissioners may ultimately be appealed to the Circuit Court. It is noted that the Board's denial of Mr. Royer's original appeal was not further appealed to the Circuit Court.

The appeal must be reviewed based on the record presented at the Planning and Development Board meetings and also argument of the appellant before the County Commission. No new evidence or testimony may be provided. In deciding, the Board of County Commissioners must make three determinations:

1. **Whether the Planning and Development Board's decision was supported by competent substantial evidence;**
2. **Whether due process was accorded; and**

(Item 9c – Continued)

FLAGLER COUNTY BOARD OF COUNTY COMMISSIONERS
PUBLIC HEARING/AGENDA ITEM #9c

3. **Whether the essential requirements of law (primarily, the four Criteria for Variances within the LDC) have been observed.**

As a variance request, the necessary detail is provided to the Planning and Development Board through a site plan. Initial site plan requirements for both variances and special exceptions are listed at LDC Section 3.07.03.A.2. The Planning and Development Board considered the applicants' site plans, which are included in the back up material attached hereto. It is noted that since the initial variance request, Mr. Royer had added to his submittal elevation views depicting the proposed construction.

Specific to variances, the LDC requires (at LDC Sec. 3.07.03.E.) demonstration that the four variance guidelines are considered by a variance applicant, with these guidelines typically depicted on a site plan and through a written narrative (and where "the board [Planning and Development Board] shall be guided by the following"):

> "*Variance guidelines.* A variance may be granted from the terms and provisions of this article where, owing to special conditions relating to the property, a literal enforcement of the provisions of this article will, in an individual case, result in unnecessary hardship. Variances may be granted by the Planning and Development Board in such an individual case of unnecessary hardship upon a written finding based on competent, substantial evidence in the official record that:
>
> 1. There are extraordinary and exceptional conditions pertaining to the particular piece of property in question because of its size, shape, topography, or other unique features that, when considered in whole or in part, creates an unnecessary hardship; and
> 2. Such conditions were not created by the affirmative actions of the applicant and the applicant has acted at all times in good faith; and
> 3. The variance, if granted, would not cause substantial detriment to the public health, welfare, safety, and morals of the community or impair the purpose and intent of this article; and
> 4. No variance may be granted for a use of land or building that is not permitted by this article.
>
> A variance, if granted, shall be the minimum variance necessary to alleviate the hardship. For purposes of this section, an unnecessary hardship shall mean that without the granting of the variance the owner will be deprived of all reasonable use of the property as allowed in the zoning district."

The Planning and Development Board's findings regarding these criteria are stated in the Planning Board's Order regarding the variance and are reflected in the Planning Board's technical staff report attached to this report.

(Item 9c – Continued)

FLAGLER COUNTY BOARD OF COUNTY COMMISSIONERS
PUBLIC HEARING/AGENDA ITEM #9c

It is assumed that the Appellants' appeal request claims that the four (4) foot-height limitation originally imposed on the pump house (through the original variance approval) deprives him of his use of the pump house in the intended manner. However, the final paragraph of the Variance guidelines listed above states, ***"A variance, if granted, shall be the minimum variance necessary to alleviate the hardship."*** (Emphasis added). The Planning and Development Board's intent with the imposed condition was to ensure that the granted variances were the minimum variances necessary to alleviate the hardship, providing space for a pump house but arguably not for housing pool furniture.

This appeal iteration alleges that the "Owners will be deprived of all reasonable use of the property as allowed in the zoning district." Staff counters that the Planning Board's decision – with two tie-votes – was indicative of the difficulty posed by his request, where the Planning Board seeks to balance reasonable requests for relief from the strict application of the Land Development Code's requirements with limitations that respect the adjacent neighborhood and uphold the Code's intent to protect the health, safety, and general welfare. In staff's opinion, the Planning Board correctly weighed the evidence and testimony provided in the variance application and at the public hearing, and could not come to a majority consensus resulting in approval; however, the deprivation of "all reasonable use" is not the end result. The previously granted variances – inclusive of the pump house height limitation – provided for the proposed pool development. In the end, the "reasonable use" was not deprived, but instead it was conditioned on a requirement to limit the pump house height. The appeal goes on to state that: "At the Technical Review Committee (TRC) which two reviews stated this application property R/C District can go to 12' high on the proposal structure." This is correct, but the Planning Board opted to restrict the pump house height to less than 12 feet as a condition of granting the requested variances. This is the Board's prerogative: if the pump house can be placed on the parcel without the variances, then the 12-foot height applies. The appeal further (appears) to seek a 9-foot, 7-inch pump house height to match the height of the existing dwelling's gable roof: "But matching the residential home the owners would try reaching a 9'7" gable roof for pleasing appeal." The Board heard this proposal, and the vote – effectively considered at two separate consecutive meetings – resulted in a tie-vote (and a denial of the variance request) at each of these Planning and Development Board meetings.

This agenda item is:
__X__ quasi-judicial, requiring disclosure of ex-parte communication; or
_____ legislative, not requiring formal disclosure of ex-parte communication.

STRATEGIC PLAN:
Focus Area: Effective Government
- Goal 2 – Build & Maintain Relationships to Support Effective & Efficient Government
  - Objective EG 2.4: Establish joint strategies to identify and address needs through leveraging of local resources.

(Item 9c – Continued)

FLAGLER COUNTY BOARD OF COUNTY COMMISSIONERS
PUBLIC HEARING/AGENDA ITEM #9c

DEPARTMENT CONTACT:
Adam Mengel, Growth Management Director, (386) 313-4065

Public notice has been provided for this application according to Land Development Code (LDC) Section 2.07.00.

OPTIONS FOR THE BOARD: As a reminder, the Board of County Commissioners is sitting in an appellate capacity as it relates to this matter. It is limited by LDC Section 3.07.03.C. to determining whether:

1. The Planning and Development Board's decision was supported by competent, substantial evidence;
2. Whether due process was accorded; and
3. Whether the essential requirements of the law have been observed.

The Board of County Commissioners may take ONE of the following actions:

1. APPROVE the Appeal request, overturning the Planning and Development Board's denial of the Variances for the Pool, Pool Deck, and Pump House in the R/C (Residential/Limited Commercial Use) District at 3 Pelican Lane. With this course of action, the Board of County Commissioners will be **OVERTURNING** the decision of the Planning and Development Board's condition to limit the height of the proposed Pump House to Four (4) Feet. The Board of County Commissioners will need to set the maximum height of the Pump House; otherwise, the maximum height will be limited to a maximum height of twelve (12) feet.

2. DENY the Appeal request, upholding the Planning and Development Board's denial of the Variance – along with affirming the original Variance condition to limit the height of the proposed Pump House to Four (4) Feet at 3 Pelican Lane. With this course of action, the Board of County Commissioners will be **AFFIRMING** the Planning and Development Board's decision to grant the Variance *with the condition as to the Pump House as originally imposed by the Planning and Development Board.*

3. REMAND the Variance denial back to the Planning and Development Board for further proceedings with direction on how the Planning and Development Board failed to base its decision on competent substantial evidence, accord due process, and/or observe the essential requirements of law. The Variance use is held in abeyance until the Planning and Development Board renders a decision on the Variance as remanded.

4. CONTINUE the Board of County Commissioners' review of the appeals to a time and date certain. A continuance should be for the appellants or for staff to provide additional information to the Board of County Commissioners.

(Item 9c – Continued)

FLAGLER COUNTY BOARD OF COUNTY COMMISSIONERS
PUBLIC HEARING/AGENDA ITEM #9c

It should be noted that, unlike a rezoning request that is limited to no more than one request for the same parcel of land every six months, a variance application submittal is not time-barred (see LDC Sec. 3.07.05.G.). Accordingly, should the Board of County Commissioners uphold the Planning and Development Board's denial of the variance, the owner may (again) immediately refile a variance request with the County for a similar request.

QUASI-JUDICIAL: Commissioner Hansen disclosed having communication with the applicant, Mr. Royer. Stated Mr. Royer was upset about the application denial, so he attempted to plead his case.

Adam Mengel, Growth Management Director, provided a presentation that included a summary of the staff report referenced above.

Commissioner Richardson inquired whether all structures within the community would be required to be four feet in height or less if the appeal request were denied.

Mr. Mengel explained that the Planning Board had considered the number of variances previously granted to the applicant and, as a result, elected to further limit the height of the pump house as a condition of approving the additional variances. He added that the height could be as much as twelve feet.

Commissioner Carney asked how many members serve on the Planning Board.

Mr. Mengel stated that there are typically seven members on the Planning Board; however, only six members were present at the September 9th meeting.

Commissioner Pennington requested confirmation that there had been a tie vote at the September 9th meeting.

Mr. Mengel confirmed that there was a tie vote.

Commissioner Hansen expressed concern regarding potential unfairness, noting that three Planning Board members had previously voted in favor of approving the variance request. He further observed that there had also been a tie vote on Mr. Royer's initial variance request.

Mr. Mengal commented on the even number of Planning Board members being problematic.

(Item 9c – Continued)

Commissioner Dance stated this is not a denial of due process.

Commissioner Carney agreed that an even number of Planning Board members is problematic. Asked for confirmation that the four-foot limitation was imposed by the Planning Board.

Mr. Mengal responded with yes. Explained how the Planning Board made the determination on the limitation.

Chair Pennington called for the applicant.

Peter McGrath, Appellant's Attorney, stated there has been an assumption that there is a four-foot height limitation with respect to hedges and walls based on a set of covenants and restrictions. Noted he has an opinion letter.

Commissioner Dance asked if the opinion letter is new evidence.

Mr. McGrath answered yes.

Commissioner Dance stated no new evidence could be considered.

Michael Rodriguez, County Attorney, noted new evidence falls outside the scope of the appeal.

Mr. McGrath spoke about how Mr. Royer voluntarily limited the height of the wall and that the restrictions have dropped off his title. Further stated that a six-foot wall would still comply with the Land Development Code (LDC) requirements. He noted that while the LDC does not specifically address pool pump houses, it does regulate accessory structures, and that under those provisions Mr. Royer would be permitted a height of up to twelve feet. Mr. McGrath stated that Mr. Royer intends to construct the pump house to a height of nine feet, seven inches, and is requesting a ten-foot allowance to accommodate minor variation. Emphasized that the pump house must contain two four-horsepower motors, a pool pump, a filtration system, and a pool heater, and that a four-foot height limitation would create a hardship by failing to provide sufficient space for the equipment and adequate ventilation. Further noted that there has been a tie vote on more than one occasion.

Raymond Royer, Appellant, spoke about his due process being violated and the Planning Board members being biased. Added there is no justification on the four-foot limitation.

Mr. McGrath stated the licensed contractor was present to discuss the issue concerning the four-foot limitation on the height of the structure.

(Item 9c – Continued)

Chair Pennington clarified the procedures. Asked whether the Planning Board had discussed the issues of equipment space and ventilation within the structure.

Mr. Mengal stated there had been a suggestion for the pump installer to appear before the Planning Board, but that this did not occur. Added that the pump installation manual was submitted as evidence. Explained that Mr. Royer indicated the additional room would be necessary to accommodate the pumps. Further noted that there is a four-foot height limitation for structures and fencing in front yards, and the shed could not be placed in its current location without a variance. Stated that the Planning Board granted the variance on the condition that the height of the structure be limited to four feet. Also noted that this is a corner lot and further clarified the applicable LDC requirements for the residential zoning district.

Commissioner Dance stated that the four-foot height limitation is not arbitrary.

Mr. Mengal stated it is not. Added that there may be private covenants and restrictions; however, those were not reviewed because the LDC requirements governed the analysis.

There was extensive BOCC discussion on the appeal request.

Mr. McGrath and Mr. Royer gave a rebuttal statement.

Chair Pennington called for public comment and there was none.

Chair Pennington called for public comment.

Tamara Daniels, Contractor Representative, commented on the pool equipment and proposed structure.

Michael Rodriguez, County Attorney, stated only the appellant and interested parties with standing that have been permitted to intervene may present oral argument on the established record, but no new testimony or other evidence shall be taken. Clarified this is not a matter for public comment because this is an appeal limited to the record before it. Asked the BOCC to disregard Ms. Daniel's testimony.

Commissioner Carney inquired what CFMs are.

Mr. Mengal responded with Cubic Feet per Minute. Noted it is measure of air flow.

The BOCC entered into further discussion on the appeal request.

(Item 9c – Continued)

Mr. Rodriguez stated the Planning Board did not render a decision to affirm or overturn. Clarified the rules and procedures and advised the BOCC on how they could take action on the item.

There was BOCC discussion on the variance requests.

A motion was made by Commissioner Dance to remand the variance denial back to the Planning and Development Board for further proceedings, with direction on reviewing the height of the accessory structure and for compliance with the Land Development Code.

Mr. Rodriguez noted what should be included in the motion.

Commissioner Dance asked for clarification.

Mr. Rodriguez clarified.

Chair Pennington asked if the BOCC should vote on the motion without public comment.

Mr. Rodriguez advised the BOCC.

The motion was seconded by Commissioner Carney.

An amended motion was made by Commissioner Dance to remand the variance denial back to the Planning and Development Board for reconsideration of the variance and the additional request for the increase of the height of the accessory structure to 10 feet, and that the variance meets the criteria for a variance under the Land Development Code. Seconded by Commissioner Carney.

Chair Pennington called for a roll call vote.

Tiffani Smith, Deputy Clerk, took a roll call vote and captured the following responses:

- **Commissioner Richardson: "Yes"**
- **Commissioner Hansen: "Aye"**
- **Chair Pennington: "Yes"**
- **Commissioner Carney: "Yes"**
- **Commissioner Dance: "Aye"**

Motion carried unanimously.

Instrument No: 2026009025 3/2/2026 3:01 PM BK: 3034 PG: 754 PAGES: 3 -
RECORDED IN THE OFFICIAL RECORDS OF Tom Bexley, Clerk of the Circuit Court & Comptroller Flagler, FL

FLAGLER COUNTY
BOARD OF COUNTY COMMISSIONERS ORDER NO. 6024
PROJECT NO. 2025080063

Appellants: Raymond R. Royer Jr. and Janice L. Paxson
Owners: Raymond R. Royer Jr. and Janice L. Paxson
Applicant: Raymond R. Royer Jr.
Location: 3 Pelican Lane, Flagler Beach, FL 32136
Parcel #: 23-11-31-5300-00000-0130
Legal Description: Lot 13 and the South 8 feet of Lot 16, River Beach, according to the map or plat thereof as recorded in Plat Book 5, Page 36, Public Records of Flagler County, Florida

Request: The appellants filed an application for the Board of County Commissioners to consider an appeal of the Planning and Development Board's denial (Planning and Development Board Order No. 5921 rendered September 16, 2025 and recorded on September 17, 2025 at Official Records Book 2991, Page 1571, Public Records of Flagler County, Florida) for a 22.34 foot left (West) street side setback variance from the minimum required 25 foot street side setback and a 1.2 percent lot coverage variance from the maximum 35 percent lot coverage in the R/C (Residential/Limited Commercial Use) district at 3 Pelican Lane (Parcel Number: 23-11-31-5300-00000-0130). The appellants specifically requested that:

"Owners will be deprived of all reasonable use of the property as allowed in the zoning district. At the Technical Review Committee (TRC) which two reviews stated this application property R/C District can go to 12' high on the proposal structure. Applications requested in February to request 10' high as a buffer. But matching the residential home the owners would try reaching a 9'7" gable roof for pleasing appeal."

Section 1. **Findings.**

The Board of County Commissioners, having considered the appeal application at its regular meeting on January 12, 2026, testimony and evidence in the record presented by staff and the parties, other written documentation of record, and comments made during the public hearing portion of the proceedings, determined that:

1. Whether the Planning and Development Board's decision was supported by competent substantial evidence;

   The Board found that the Planning and Development Board's decision denying the variance request was neither supported or not supported by competent substantial evidence. The Board's decision denying the

application request was based on the Board's tie-vote resulting in a denial.

2. Whether due process was accorded; and

   The Board of County Commissioners found that due process was accorded to all parties by the Planning and Development Board.

3. Whether the essential requirements of law (primarily, the four Criteria for Variances within the LDC) have been observed.

   The Board of County Commissioners found that the essential requirements of law – including primarily the four Criteria for Variances within the LDC – have been observed by the Planning and Development Board. However, the Board's denial of the application request – due to the tie-vote – necessitates the Board's reconsideration of the variance request on remand to make a determination on the variance application for reconsideration of the variance request inclusive of the increase in height of the pump house accessory structure to 9 feet, 7 inches, finding that the request meets the criteria for approval of a variance under the LDC.

Section 2. **Remanded.**

Based on the foregoing and following the January 12, 2026 hearing of the Board of County Commissioners, the requested appeal stated above is remanded to the Planning and Development Board for reconsideration.

Section 3. **Appeal Rights.**

An aggrieved party, including the local governing body, may appeal a Board of County Commissioners' order regarding an appeal request by filing such appeal with the Circuit Court of Flagler County, Florida, within thirty (30) days of the rendering of the order by the Board. Such appeal shall be by writ of certiorari and shall not be a hearing de novo.

FLAGLER COUNTY
BOARD OF COUNTY COMMISSIONERS ORDER NO. 6024
PROJECT NO. 2025080063

SO ORDERED AND RENDERED, this 2nd day of March 2026, by the Board of County Commissioners of Flagler County, Florida, by and through its Chair.

FLAGLER COUNTY
BOARD OF COUNTY COMMISSIONERS

ATTEST:

D.C.
Tom Bexley, Clerk of the Circuit Court
and Comptroller

Leann Pennington, Chair

Approved as to Form:

Sarah Spector, Assistant County Attorney

FLAGLER COUNTY PLANNING AND DEVELOPMENT BOARD
PUBLIC HEARING/AGENDA ITEM NO. 5

SUBJECT: QUASI-JUDICIAL – Project No. 2025080063 – Request for Variances from the Minimum Required Streetside (West) Setback and Maximum Lot Coverage Requirement for a Pump House in the R/C (Residential/Limited Commercial) District at 3 Pelican Lane. Parcel Number: 23-11-31-5300-00000-0130; 7,500+/- square feet (0.17+/- acres). Owners: Raymond R. Royer, Jr., and Janice L. Paxson/Applicant: Raymond R. Royer, Jr. (AR No. 5921). (TRC,*PDB*)

DATE OF MEETING: April 14, 2026

OVERVIEW/SUMMARY: This request is quasi-judicial in nature and requires disclosure of ex parte communication. The request is for approval of variances from the minimum required left streetside (West) setback and from the maximum allowed lot coverage in the R/C (Residential/Limited Commercial) District. The subject parcel is located West of North Oceanshore Boulevard at 3 Pelican Lane:



On August 22, 2025 Mr. Royer submitted a new application for variances from the minimum required left streetside (West) setback and maximum allowed lot coverage for

a proposed pump house in the R/C District. This request is a before-the-fact variance request, preceding the application for a building permit.

This property is subject to Planning and Development Board Order No. 5274 recorded in Official Records Book 2942, Page 668, Public Records of Flagler County, Florida. It was heard at the February 11, 2025 Planning and Development Board Meeting.

The order granted a series of variances to allow for the construction of the a pool, pool deck, and pump house within the street side (West) setback subject to the condition that the pump house have a height no greater than four (4) feet and be located within the walled-in area.

The owner appealed the condition to Board of County Commissioners at the May 5, 2025 Regular Meeting. The Board voted unanimously to deny the appeal.

The owner then submitted another application with new variance requests pertaining to the pump house (Project No. 2025050045) on May 22, 2025. This application was heard at the July 8, 2025 Planning and Development Board Regular Meeting. A motion to approve failed 2-2. A subsequent motion to continue the request to the August 12, 2025 Regular Meeting with the Board requesting more information passed unanimously.

Following the meeting, staff determined that a tie-vote is a failed vote on the motion, and ultimately is a denial. After informing the applicant, he elected to submit a new application with the same variance requests (Project No. 2025080063). This item, containing the same material variance requests, was heard at the September 9, 2025 Planning and Development Board Regular Meeting. A motion to approve the requests failed 3-3 and was therefore denied.

Mr. Royer then appealed Project No. 2025080083 to the Board of County Commissioners at the January 12, 2026 Regular Meeting. The Board found that a tie-vote was not a basis for denial because it was not competent substantial evidence and remanded the item back to the Planning and Development Board.

Mr. Royer then requested this item be placed on the April 14, 2026 Planning and Development Board Agenda following the March 18, 2026 Technical Review Committee meeting.

The subject property is described as Lot 13 and the South 8 feet of Lot 16 of River Beach subdivision, according to the map or plat thereof as recorded in Plat Book 5, Page 36, Public Records of Flagler County, Florida.

Public notice has been provided for this application according to Flagler County Land Development Code Section 2.07.00. Public comments have been received and public

comments related to the previous application pertaining to this property (Project No. 2025050045) can be found in the August 12, 2025 Published Agenda or as part of the Record.

This agenda item is:
__X__ quasi-judicial, requiring disclosure of ex-parte communication; or
_____ legislative, not requiring formal disclosure of ex-parte communication.

OPTIONS FOR THE BOARD:

APPROVAL: The Planning and Development Board finds that all the variance criteria as listed in the guidelines at Land Development Code Section 3.07.03.E. have been met and therefore approves Project No. 2025080063 for a 22.34 left (West) street side setback variance from the minimum required 25 foot street side setback and 1.2 percent lot coverage variance from the maximum allowed 35 percent lot coverage for a pump house at 3 Pelican Lane (Parcel No. 23-11-31-5300-00000-0130).

DENIAL: The Planning and Development Board finds that all the variance criteria as listed in the guidelines at Land Development Code Section 3.07.03.E. have not been met and therefore denies Project No. 2025080063 for a 22.34 left (West) street side setback variance from the minimum required 25 foot street side setback and 1.2 percent lot coverage variance from the maximum allowed 35 percent lot coverage for a pump house at 3 Pelican Lane (Parcel No. 23-11-31-5300-00000-0130).

CONTINUANCE: The Planning and Development Board continues the variance request on the basis that additional information is needed from staff or the applicant. Based on the presentation and the public hearing, the Board does not have sufficient information to be able to render a decision on the variance requests. Continuing the variance request to a time and date certain will preserve public notice and provide an opportunity for staff or the applicant to provide additional information.

ATTACHMENTS: *Use this link to view attachment(s)*
1. Technical Staff Report
2. Application and supporting documents
3. September 9, 2025 Planning and Development Board Minutes (in part)
4. Planning and Development Board Order No. 5291
5. January 12, 2026 Board of County Commissioners Regular Meeting Minutes (in part)
6. Board of County Commissioners Order No. 6024
7. Public Notice
8. Public Comment

PROJECT NO. 2025080063
STREETSIDE VARIANCE IN THE R/C DISTRICT
3 PELICAN LANE
TECHNICAL STAFF REPORT

Project No./AR No.: 2025080063/5921

Address: 3 Pelican Lane

Owners: Raymond R. Royer, Jr., and Janice L. Paxson

Applicant: Raymond R. Royer Jr.

Parcel No.: 23-11-31-5300-00000-0130

Parcel Size: 7,500+/- square feet

Legal Description:
Lot 13 and the South 8 feet of Lot 16, River Beach, according to the map or plat thereof as recorded in Plat Book 5, Page 36, Public Records of Flagler County, Florida.

Existing Zoning and Land Use Classification:
Zoning: R/C (Residential/Limited Commercial) District
Land Use: Mixed Use: Low Density

Future Land Use Map Classification/Zoning of Surrounding Land:
North: Mixed Use: Low Density/R/C (Residential/Limited Commercial) District
East: Mixed Use: Low Density/R/C (Residential/Limited Commercial) District
South: Pelican Lane; Mixed Use: Low Density/R/C (Residential/Limited Commercial) District
West: Mockingbird Lane; Residential: Low Density Rural Estate/R-1 (Rural Residential)

Flagler County Land Development Code (FCLDC) Sections Affected: Section 3.02.04, *Lots of Record*; Section 3.03.13, *R/C – Residential/Limited Commercial District*; Section 3.07.03, *Procedure for variances and special exceptions*; and Section 3.07.03.E, *Variance guidelines*.

FCLDC Sec. 3.03.13.E.2 – Minimum Setback Requirements for Structures (for the R/C District):

Front yard —Thirty-five (35) feet if property depth exceeds one hundred (100) feet.
—Twenty-five (25) feet if one hundred (100) feet or less.
Rear yard — Twenty (20) feet.
Side yard interior lot — Seven and a Half (7.5) feet.
Abutting any street — Twenty-five (25) feet.

Maximum lot coverage: The total lot area covered with principal and accessory buildings shall not exceed thirty-five (35) percent.

FCLDC Sec. 3.02.04.G – Lots of Record

Front Yard—25 feet
Rear Yard—20 feet
Side Yard—7.5 feet
Street Side Yard—20 feet

Summary of the Request:
The owner is seeking a new street side setback variance and lot coverage variance for a proposed pump house to supersede the variance approvals granted through Planning and Development Board Order No. 5274, recorded in Official Records Book 2942, Page 668, Public Records of Flagler County, Florida, at the February 11, 2025 Planning and Development Board Meeting.

Planning and Development Board Order No. 5274 granted a 25 foot street side (West) yards setback variance from the minimum required 25 foot street side setback for a pool and pool deck; a 3.49 foot rear (North) yard setback variance from the minimum required 10 foot rear setback for a pool and pool deck; a 23 foot street side setback (West) yard setback variance from the minimum required street side setback for a pump house; and a 0.82 percent variance from the maximum 35 percent lot coverage in the R/C (Residential/Limited Commercial Use) district subject to the condition that the pump house be within the walled-in area of the pool and pool deck, and with its height not to exceed four (4) feet.

The owner submitted an application to Appeal the Planning and Development Board's Decision regarding the pump house maximum height condition. The Appeal was heard by the Flagler County Board of County Commissioners at the May 5, 2025 Regular Meeting. The Commission voted unanimously to deny the appeal on the basis that the Planning and Development Board's decision was supported by competent substantial evidence, that due process was accorded to the applicant, and the essential requirements of the law, primarily the four criteria for variances within the LDC, had been observed.

Although the appeal was denied, FCLDC Sec. 3.07.03 – *Procedure for variance and special exception* – does not prohibit a property owner or applicant from modifying or reapplying for a variance following an undesired condition or denial. This notably differs from LDC Sec. 3.07.05.G – *Procedures for requesting a rezoning – Frequency of application* – which states that a property owner shall not initiate action affecting the same parcel of land more often than once every six months. The property owner has elected to submit a new variance application.

The owner submitted the new variance application (Project No. 2025050045) on May 22, 2025. The request was to place a pump house, with a base of 12 feet by 8 feet, with a height of 7 feet 6 inches (measured at 9 feet 3 inches at the peak of the roof), 2 feet 8 inches from the left (West) street side property line. The pump house would abut the front (South) yard setback line and be located 3 feet 4 inches from the southwest corner of the existing dwelling. The applicant has submitted various digital renderings to showcase that the pump house would be designed and built to be consistent with the character of the existing dwelling.

The requested variances were for a 22.34 left (West) street side setback variance from the minimum required 25 foot street side setback (0.66 feet less than the previously approved 23 foot street side setback) and a 1.2 percent lot coverage variance (0.38 percent more than the previously approved 0.82 percent lot coverage variance). The increase in lot coverage is due to the proposed pump house dimensions increasing from 12 feet by 6 feet to 12 feet by 8 feet. The approval of the new variance requests would supersede the previous variance requests for the pump house as well as the Board's condition to limit the height to four (4) feet and locate it within the walled-in area. The previous variance requests for the pool and pool deck would remain valid.

The May 22, 2025 application was heard at the July 8, 2025 Planning and Development Board Regular Meeting. A motion to approve failed through a 2-2 tie vote. A subsequent motion to continue the request to the August 12, 2025 Regular Meeting with the Board requesting more information passed unanimously.

At the August 12, 2025 Regular Meeting, a motion to approve again failed through a 2-2 tie vote. At staff's request for a decision that would yield an affirmative (passed) motion, a motion to continue the request to the September 9, 2025 Regular Meeting passed unanimously.

Following the meeting, staff determined that a tie vote is a failed vote, and ultimately is a denial of the application request. After being informed of this determination, the applicant elected to submit a new application with the same variance requests. Because the application has not materially changed, staff did not require the application to be reviewed by the Technical Review Committee (TRC) again.

The new request (Project No. 2025080063) was heard at the September 9, 2025 Planning and Development Board regular meeting. A motion to approve failed 3-3 and was therefore denied.

The applicant then appealed the denial to the Board of County Commissioner's at the January 12, 2026 Regular Meeting. The Board found that a tie-vote was not a basis for denial because it was not competent substantial evidence and remanded the item back to the Planning and Development Board.

The subject property is 7,500+/- square feet in size having a width of 100 feet and a depth of 75 feet, and is described as Lot 13 and the South 8 feet of Lot 16, River Beach, according to the map or plat thereof as recorded in Plat Book 5, Page 36, Public Records of Flagler County, Florida.

According to the plat of River Beach, Lot 13 and the 8 southerly feet of Lot 16 are depicted as (at Map Book 5, Page 36, Public Records of Flagler County, Florida):



According to the Flagler County Property Appraiser records, the existing nonconforming dwelling was built in 1979, predating the adoption of the Flagler County Land Development Code. The owners, Mr. Royer and Ms. Paxson, purchased the property though a Warranty Deed dated September 22, 2017, and recorded in Official Records Book 2231, Page 845, Public Records of Flagler County, Florida.

A 1978 Warranty Deed – from Albert G. and Leola R. Jones to Bertis W. and Alma M. Harris – dated January 3, 1978 and recorded on January 9, 1978 at Official Records Book 98, Page 436, Public Records of Flagler County, Florida, conveyed all three lots – Lots 13, 16, and 23 – together as a single parcel. The parcel's present configuration – with all of Lot 13 and the South 8 feet of Lot 16 – was conveyed – through the Warranty Deed from Bertis W. and Alma M. Harris to Edwin and Patricia Friday dated March 5, 1979 and recorded on March 6, 1979 at Official Records Book 117, Page 673, Public Records of Flagler County, Florida – just over a year later, and generally coinciding with the timing of the construction of the single-family dwelling.

The owner has not begun the permitting process to build the pool, pool deck, or pump house. This is a before-the-fact variance request.

Variance Guideline Analysis:
LDC Section 3.07.03.E, *Variance guidelines,* states that a variance may be granted only upon a finding by the Planning and Development Board that all of the criteria listed in the guidelines have been found in favor of the applicant and that a literal enforcement of the provisions of this article will result in an unnecessary hardship. These criteria are listed followed by the applicant's statements (included below and attached in their entirety) and staff's analysis:

1. *There are extraordinary and exceptional conditions pertaining to the particular piece of property in question because of its size, shape, topography, or other unique features that, when considered in whole or in part, creates an unnecessary hardship; and*

   Applicant's response: Subject to hardship due to sqft being undersized to meet 9,000 sqft guildlines. This property is a corner lot that is undersized as hugely burden by zoning setbacks for 9,000 sqft properties.

   Staff analysis: The subject property is an undersized Lot of Record being part of the River Beach subdivision dating back to 1959 and being approximately 1,500 square feet under the minimum lot size of 9,000 square feet in the R/C district.

2. *Such conditions were not created by the affirmative actions of the applicant and the applicant has acted at all times in good faith; and*

   Applicant's response: I've been in good faith by first applying for this applications. All other permitting for electric, plumbing to building will be apply for in separate application in good faith.

   Staff analysis: This is a before-the-fact variance request, and the applicant is seeking permission before applying for a building permit.

3. *The variance, if granted, would not cause substantial detriment to the public health, welfare, safety, and morals of the community or impair the purpose and intent of this article; and*

   Applicant's response: This proposal don't cause no detriment to the public health, welfare, safety and morals of the community of Riverbeach Subd. The proposal does not impair anyone's views of the subd. Amenities of the River or Beach in our convants [illegible].

   Staff analysis: The granting of a variance will not cause substantial detriment to the public health, welfare, safety, and morals of the community. The applicant has

submitted renderings showing that the pump house will be designed and built to be consistent with the existing dwelling.

4. *No variance may be granted for a use of land or building that is not permitted by this article.*

   Applicant's response: Shed permitting policy April 17, 2012 sheds 61 sq ft to 100 sq ft. The proposals are 72 to 92 sq ft pool house shed.

   Staff Analysis: Pools, pool decks, and pump houses are permitted accessory uses and structures within the R/C zoning district.

A variance, if granted, shall be the minimum variance necessary to alleviate the hardship. For purposes of this section, an unnecessary hardship shall mean that without the granting of the variance the owner will be deprived of all reasonable use of the property as allowed in the zoning district.

Applicant response: Refer to section 3. And without a hardship and variance granted the applicant will be deprived of all safe reasonable use of the property.

Staff Analysis: The newly proposed location of the pump house reduces the necessary relief for the street side setback but increases the necessary relief for lot coverage. The current four-foot height limitation does reduce the accessibility and use of the pump house. While the requested variances are before-the-fact and the property is an undersized Lot of Record, the hardship is self-created.

Future Land Use Map

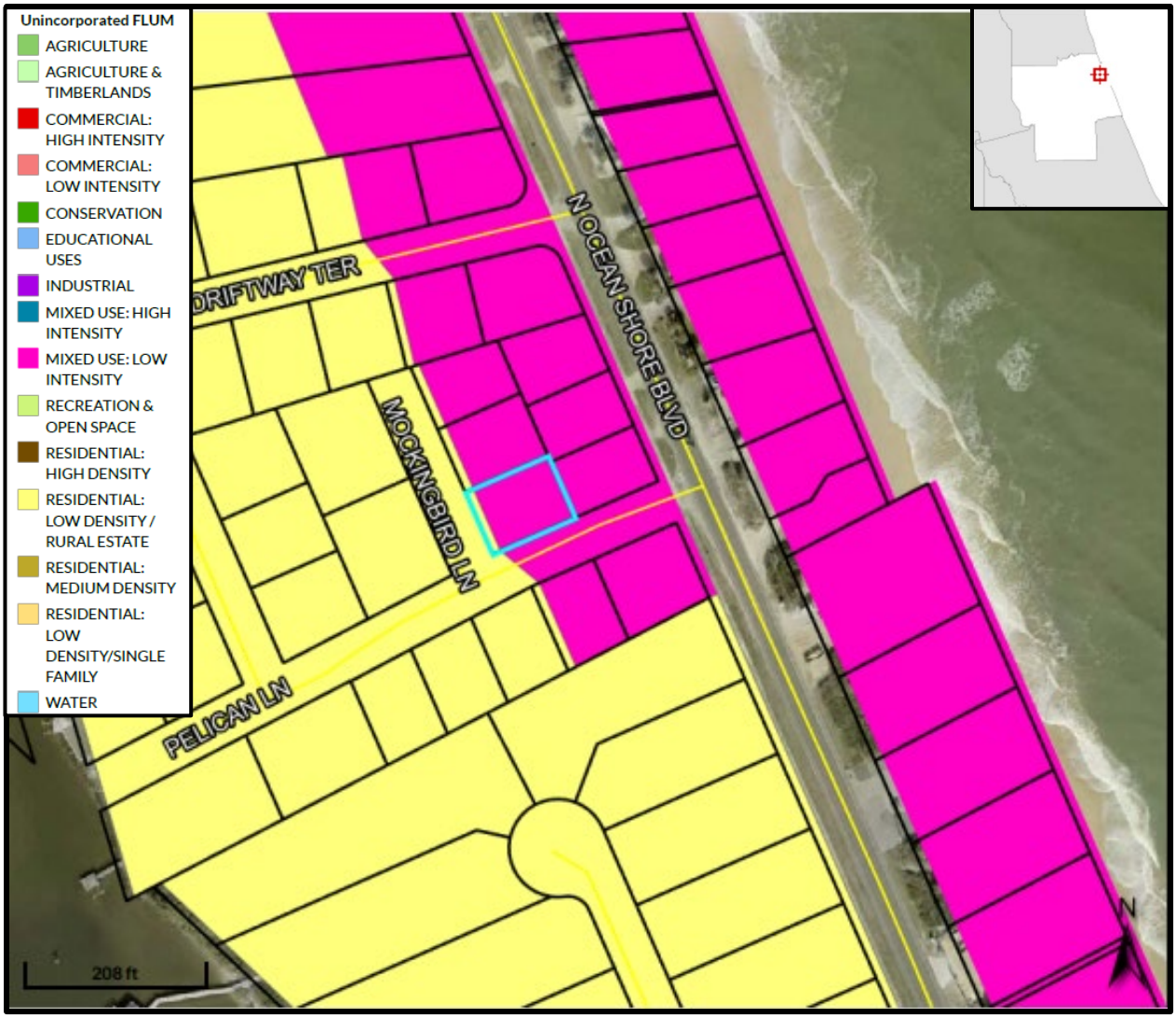

Zoning Map


RESIDENTIAL/COMMERCIAL
RESIDENTIAL/COMMERCIAL
NTIAL
N OCEAN SHORE BLVD
DRIFTWAY TER
RESIDENTIAL/COMMERCIAL
RURAL RESIDENTIAL
MOCKINGBIRD LN
RESIDENTIAL/COMMERCIAL
RESIDENTIAL/COMMERCIAL
PELICAN LN
RURAL RESIDENTIAL
URBAN SINGLE-FAMILY RESIDENTIAL
RURAL RESIDENTIAL
URBAN SINGLE-FAMILY RESIDENTIAL
URBAN SINGLE-FAMILY RESIDENTIAL
208 ft
N

Flood Zone Map

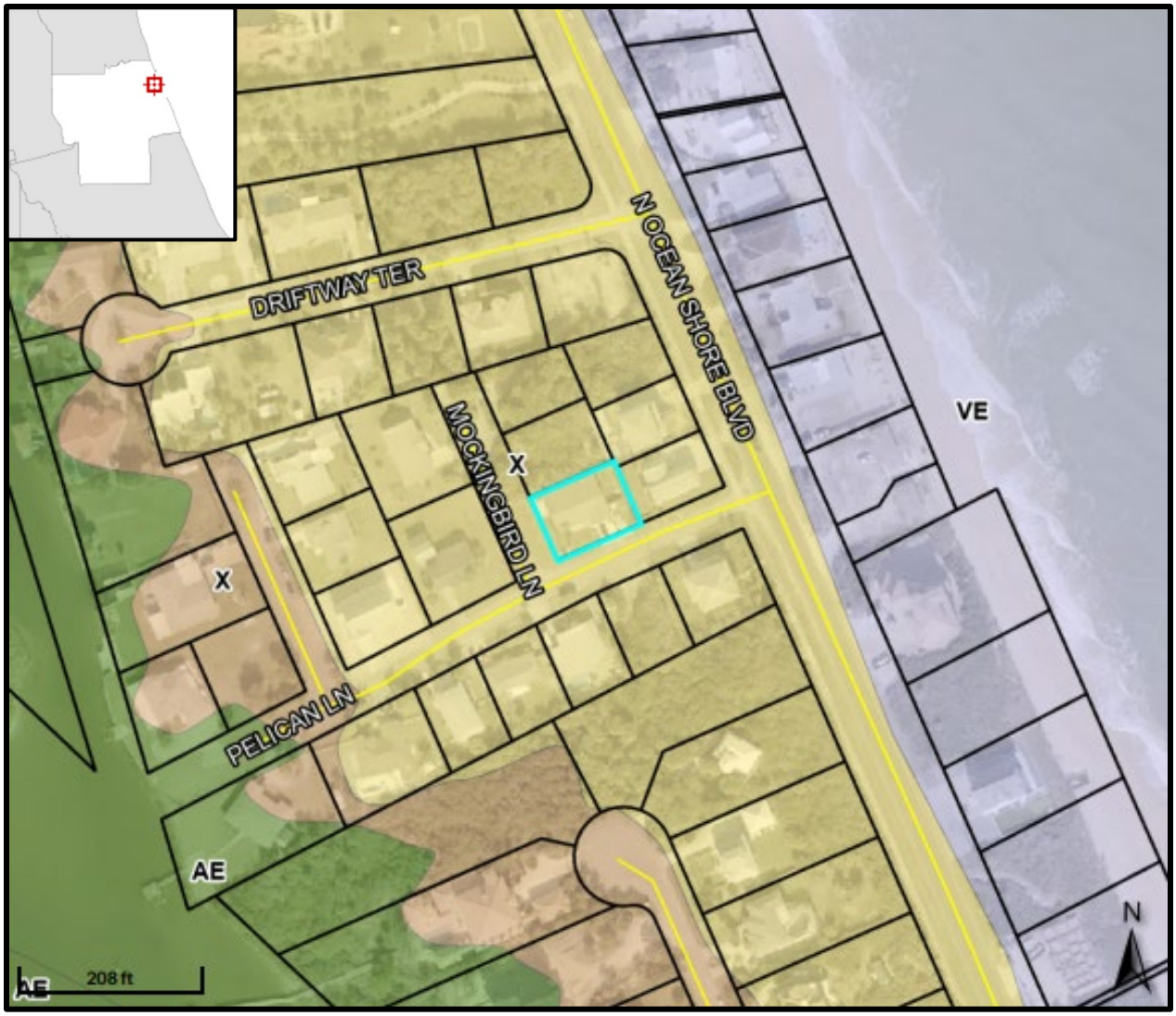

Soils


35
Quartzipsamments, dredged
31 Plam Beach gravelly sand, 0 to 8% slopes
32 Narcrossee, shell subtratum-Welaka complex, 0 to 5% slopes
DRIFTWAY TER
N OCEAN SHORE BLVD
MOCKINGBIRD LN
PELICAN LN
32
33
35
31
26
99
32
26
208 ft
N

Wetlands

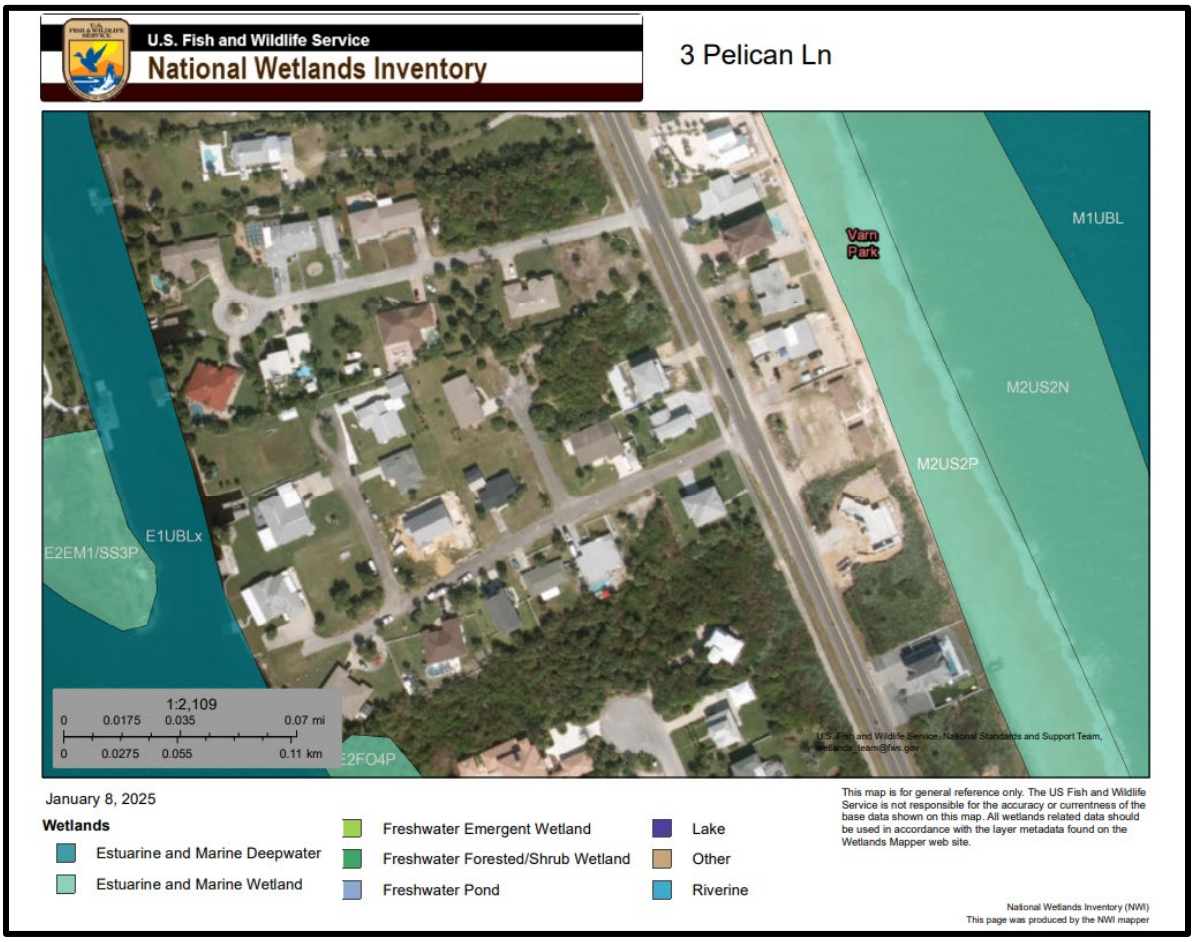
U.S. Fish and Wildlife Service
National Wetlands Inventory
3 Pelican Ln
M1UBL
Varn Park
M2US2N
M2US2P
E1UBLx
E2EM1/SS3P
E2FO4P
1:2,109
0 0.0175 0.035 0.07 mi
0 0.0275 0.055 0.11 km
U.S. Fish and Wildlife Service, National Standards and Support Team, wetlands_team@fws.gov
January 8, 2025
Wetlands
Estuarine and Marine Deepwater
Estuarine and Marine Wetland
Freshwater Emergent Wetland
Freshwater Forested/Shrub Wetland
Freshwater Pond
Lake
Other
Riverine
This map is for general reference only. The US Fish and Wildlife Service is not responsible for the accuracy or currentness of the base data shown on this map. All wetlands related data should be used in accordance with the layer metadata found on the Wetlands Mapper web site.
National Wetlands Inventory (NWI)
This page was produced by the NWI mapper

APPLICATION FOR VARIANCE

FLAGLER COUNTY, FLORIDA
1769 E. Moody Blvd, Suite 105
Bunnell, FL 32110
Telephone: (386) 313-4009 Fax: (386) 313-4109

Application/Project #: _____

PROPERTY OWNER(S)			
Name(s):	RAYMOND R ROYER JR.		
Mailing Address:	3 PELICAN LANE		
City:	FLAGLER BEACH	State: FLORIDA	Zip: 32136
Telephone Number	[redacted]	Fax Number	

APPLICANT/AGENT			
Name(s):	RAYMOND R. ROYER JR.		
Mailing Address:	3 PELICAN LANE		
City:	FLAGLER BEACH	*State:* FLORIDA	*Zip:* 32136
Telephone Number	[redacted]	*Fax Number*	
E-Mail Address:	[redacted]		

SUBJECT PROPERTY		
SITE LOCATION (*street address*):	3 PELICAN LANE: WEST SIDE INCLUDING NORTH AND SOUTH	
LEGAL DESCRIPTION: *(briefly describe, do not use "see attached")*	POOL HOUSING STRUCTURE 92 sqft. 8' W x 12' L x 9'7" HEIGHT AT PEEK OF GABLE ROOF	
Parcel # (*tax ID #*):	23-11-31-5300-00000-0130	
Parcel Size:	7,499,556	
Current Zoning Classification:	SINGLE FAMILY RC-1	
Current Future Land Use Designation	SINGLE FAMILY	
Subject to A1A Scenic Corridor IDO?	☐ YES	☒ NO

Relief Requested: HARDSHIP RELIEF ON UNDERSIZE LOT, VARIANCE RELIEF FOR POOL HOUSING STRUCTURE ON HEIGHT ~~AND SETBACKS~~ OR ROOF COVERAGE

R R R

Signature of Owner(s) or Applicant/Agent
if Owner Authorization form attached

8/22/2025
Date

****OFFICIAL USE ONLY****

PLANNING BOARD RECOMMENDATION/ACTION:

APPROVED [ ]
*APPROVED WITH CONDITIONS [ ]
DENIED [ ]

Signature of Chairman: _____

Date: _____ *approved with conditions, see attached.

NOTE: The applicant or a representative, must be present at the Public Hearing since the Board, at its discretion, may defer action, table, or take decisive action on any application. Rev. 09/16

APPLICATION FOR VARIANCE

FLAGLER COUNTY, FLORIDA
1769 E. Moody Blvd, Suite 105
Bunnell, FL 32110
Telephone: (386) 313-4009 Fax: (386) 313-4109

FLAGLER COUNTY FLORIDA

Subject Property: 3 PELICAN LANE, FLAGLER BEACH

E. *Variance guidelines.* A variance may be granted, upon application, from the terms and provisions of this article as will not be contrary to the public health, safety, welfare and morals where, owing to special conditions, a literal enforcement of the provisions of this article will, in an individual case, result in unnecessary hardship. Such variances may be granted by the planning board in such individual case of unnecessary hardship upon a written finding that: HARDSHIP ON 7,499. SSG UNDERSIZED LOT. THIS POOL HOUSING STRUCTURE WILL ADD PUBLIC HEALTH & SAFTY TO WELFARE.

1. There are extraordinary and exceptional conditions pertaining to particular piece of property in question because of its size, shape, topography, or other unique features that, when considered in whole or part, creates an unnecessary hardship; and HARDSHIP DUE TO UNDERSIZE LOT SQFT. IN MEETING THE 9,000 SQFT. GUIDLINES, THIS PROPERTY IS A CORNER LOT AND IS UNDER BURDENSOME IN TRYING TO MEET THE NEW 9,000 SQFT GUIDELINES SET BY ZONING & PLANNING.

2. Such conditions were not created by the affirmative actions of the applicant and the applicant has acted at all times in good faith; and I'VE ALWAYS BEEN IN GOOD FAITH AND HAVE TRIED TO MEET SUGGESTIONS BY THE ZONING & PLANNING BOARD. I BELIEVE THAT ALL SUGGESTIONS HAVE BEEN EXHAUSTED. THIS NEW APPLICATION IS THE BEST SUITED FOR THE INSTALL OF ELECTRICAL TO MOTORIZED COMPONENTS AND MAINTENCE TO KEEPING OUT OF THE WEATHER.

3. The variance, if granted, would not cause substantial detriment to the public health, welfare, safety, and morals of the community or impair the purpose and intent of this article; and THIS PROPOSAL DON'T CAUSE NO DETRIMENT TO THE PUBLIC HEALTH OR SAFTY WELFARE. THIS PROPOSAL DOES NOT IMPAIR ANYONE'S VEIWS OF THE SUBDIVSION TWO AMENITES OF RIVER BEACH COMMUNITY, THE COVANTS ARTICLES AND RESTRICTIONS FROM 1959 IS ON PROPERTY LINES 4' HEIGHT RESTRICTION.

4. No variance may be granted for a use of land or building that is not permitted by this article.

THIS POOL HOUSING MEETS SHED PERMITING POLICY APRIL 17, 2012 OF 121 SQFT. TO 100 SQFT. IN BOTH CASES NEITHER HAVE TO FULLY DIVULGE WHAT THE STRUCTURE USE WILL HOUSE. I'VE HAVE IN GOOD FAITH FULLY DIVULGE MY INTENSION OF USE AND WILL SUMMITT PROPER PERMITS.

A variance, if granted, shall be the minimum variance necessary to alleviate the hardship. For purposes of this section, an unnecessary hardship shall mean that without the granting of the variance the owner will be deprived of all reasonable use of the property as allowed in the zoning district. WITHOUT HARDSHIP AND VARIANCES BEING GRANTED TO BUILD OF SAFE POOL HOUSING FOR MY FAMILY AND SUBDIVISION COMMUNITY, THIS STRUCTURE IS BEING BUILT TO MATCH MY HOME TO ADD FUTURE VALUE FOR MY FAMILY AND FOR RIVER BEACH SUBDIVISION.

NOTE: The applicant or a representative, must be present at the Public Hearing since the Board, at its discretion, may defer action, table, or take decisive action on any application. Rev. 09/16

Instrument No: 2017033195 9/22/2017 4:29 PM BK: 2231 PG: 845 PAGES: 2 DOCTAX PD $2,660.00
RECORDED IN THE OFFICIAL RECORDS OF Tom Bexley, Clerk of the Circuit Court & Comptroller Flagler, FL

Prepared by and return to:
Seth D Corneal
Manager/Member
First Shore Title LLC
509 Anastasia Blvd
Saint Augustine, FL 32080
904-687-2247
File Number: **FS17-015**
Will Call No.:

Parcel Identification No. **23-11-31-5300-00000-0130**

[Space Above This Line For Recording Data]

Warranty Deed

(STATUTORY FORM - SECTION 689.02, F.S.)

This Indenture made this **22nd** day of **September, 2017** between **Harold Arthur Kretzer and Lori Ann Kretzer** whose post office address is **PO Box 1788, Bunnell, FL 32110-1788** of the County of **Flagler**, State of **Florida**, grantor*, and **Raymond R. Royer, Jr. and Janice L. Paxson**
whose post office address is **3 Pelican Lane, Flagler Beach, FL 32136** of the County of Flagler County, State of **Florida**, grantee*,

Witnesseth that said grantor, for and in consideration of the sum of TEN AND NO/100 DOLLARS ($10.00) and other good and valuable considerations to said grantor in hand paid by said grantee, the receipt whereof is hereby acknowledged, has granted, bargained, and sold to the said grantee, and grantee's heirs and assigns forever, the following described land, situate, lying and being in **Flagler County, Florida**, to-wit:

Lot 13 and the South 8 feet of Lot 16, River Beach, according to the map or plat thereof as recorded in Plat Book 5, Page 36, Public Records of Flagler County, Florida.

and said grantor does hereby fully warrant the title to said land, and will defend the same against lawful claims of all persons whomsoever.

* "Grantor" and "Grantee" are used for singular or plural, as context requires.

In Witness Whereof, grantor has hereunto set grantor's hand and seal the day and year first above written.

Signed, sealed and delivered in our presence:

Witness Name: SETH D. CORNEAL

Karen Jennifer Cook
Witness Name: Karen Jennifer Cook

Harold Arthur Kretzer (Seal)

Witness Name: SETH D. CORNEAL

Karen Jennifer Cook
Witness Name: Karen Jennifer Cook

Lori Ann Kretzer (Seal)

Unofficial Copy

DoubleTime®

State of Florida
County of Saint Johns

The foregoing instrument was acknowledged before me this 22nd day of September, 2017 by Harold Arthur Kretzer and Lori Ann Kretzer, who [_] are personally known or [X] have produced a driver's license as identification.

[Notary Seal]

Notary Public

Printed Name: SETH D. CORNEAL

My Commission Expires: APRIL 30, 2018

SETH DAVID CORNEAL
MY COMMISSION # FF 113594
EXPIRES: April 30, 2018
Bonded Thru Budget Notary Services

Unofficial Copy

NOTE:
1. Fence gates installed on both ends of patio
2. Width of patio not too exceed 18'-6" to ensure property line is withheld

WOODED AREA

10' 5' 10'

50' Right of Way

25' Center of Road

20'-6"

GRASS

DECK

3 Pelican Lane

48' 40'

9' x 14'

5'

4'

12' x 8' x 7'-6"
9'-3" Roof Peak

7'-5"

Property Line to Wall 2'8"

MOCKINGBIRD LANE

* Pump House extends 2' beyond the house

25' 27'

Pump House View 1



10' Easement



Pump House View 2

50' Right of Way

30' 15'

PELICAN LANE

N

2147

Sheet Title

Designed by | Created by | Checked by

731 Industrial Court, Cherryville PA
6108496791
Anthony@fsdesignsolutions.com

3 Pelican Lane
Flagler Beach FL

5/3/2025 Date
2147 Job Number
001 File Number

1 of 3

ADDRESS: 3 PELICAN LANE

JOB #24-3014

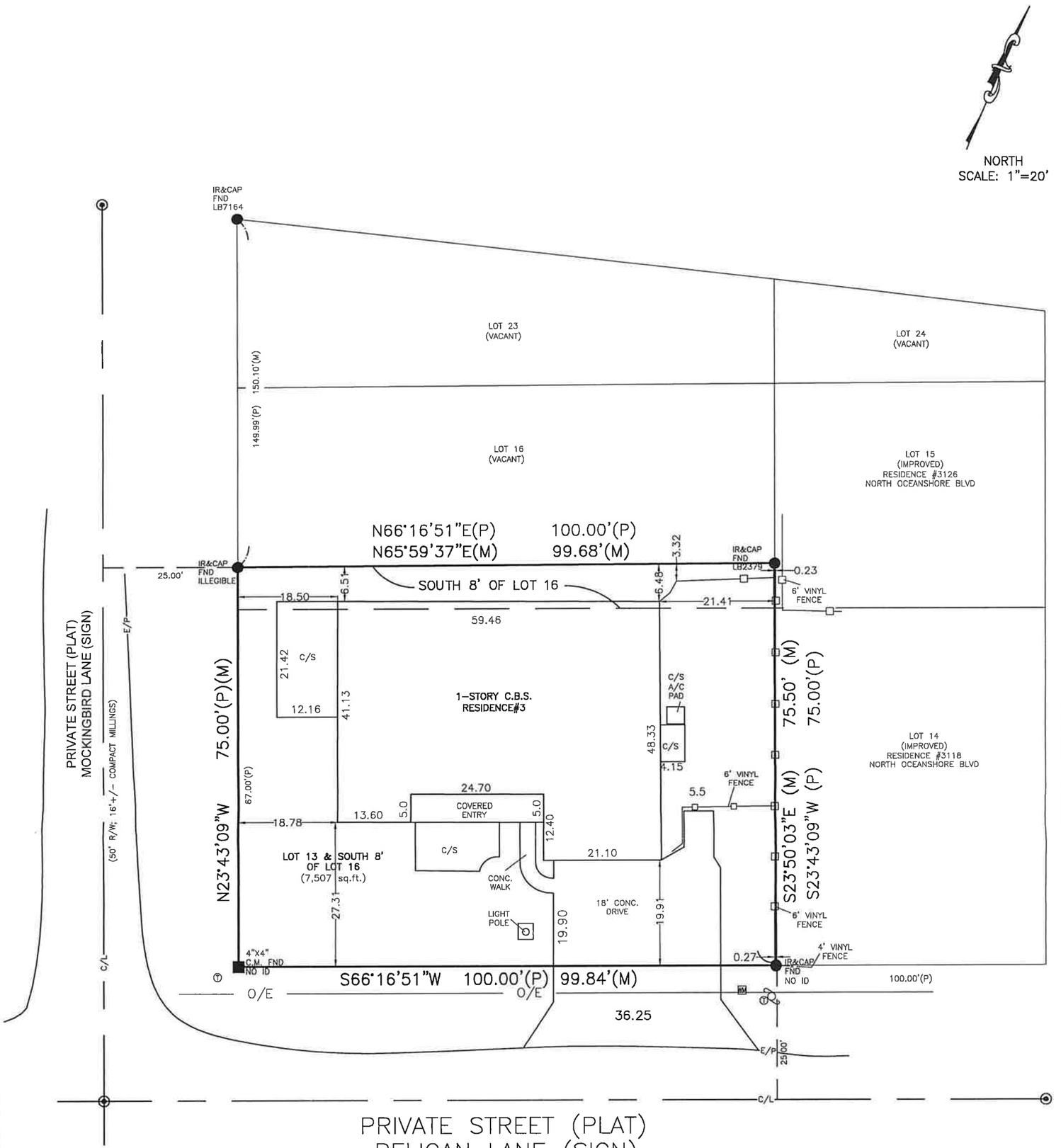

PRIVATE STREET (PLAT)
PELICAN LANE (SIGN)
(50' R/W; 28' SHELL ROAD)

REVISIONS:
--

TYPE OF SURVEY: BOUNDARY / LOCATION
NOTE: THIS SURVEY IS VALID NO MORE THAN 90 DAYS FROM DATE OF LAST FIELD WORK

DESCRIPTION: LOT 13 AND THE SOUTH 8 FEET OF LOT 16, RIVER BEACH SUBDIVISION, ACCORDING TO THE PLAT THEREOF, RECORDED IN MAP BOOK 5, PAGE 37, OF THE PUBLIC RECORDS OF FLAGLER COUNTY, FLORIDA.

LEGEND:

○ IR	1/2" Iron Rod set "LB7672"	(D)	Deed Bearing & Distance	PT	Point of Tangency	A/C	Air Conditioner Pad
● IR	5/8" Iron Rod found	(P)	Plat Bearing & Distance	PI	Point of Intersection	EQP	Pool Equipment Pad
● IP	1/2" Iron Pipe	(M)	Measured Bearing & Distance	U.E.	Utility Easement	PEP	Pretreatment Effluent Pumping Tank
○ N/D	Nail and Disk set "LB7672"	(C)	Calculated Bearing & Distance	D.E.	Drainage Easement		
● N/D	Nail and Disk found	C/L	Center Line	L.E.	Landscape Easement	O/E	Overhead Electric
◉ PCP	Permanent Control Point	E/P	Edge of Pavement	N.G.V.D.	National Geodetic Vertical Datum		P/P – Power Pole
□ CM	Concrete Monument set	E/R	Edge of Road	N.A.V.D.	North American Vertical Datum	Ⓜ	Manhole
■ CM	Concrete Monument found	R/W	Right of Way	MSL	Mean Sea Level	Ⓣ	Telephone Riser
PRM	Permanent Reference Monument	Δ	Delta	B.M.	Bench Mark		Cable Television Riser
FND	Found	R	Radius	T.B.M.	Temporary Bench Mark	Ⓕ	Fiber Optic Riser
LB	Licensed Business	L	Length	TOB	Top Of Bank	WM	Water Meter
LS	Licensed Surveyor	CB	Chord Bearing	TOE	TOE of slope		Electric Meter
PSM	Professional Surveyor & Mapper	CH	Chord Distance	F.F.	Finish Floor Elevation		Fire Hydrant
O.R.	Official Records Book	PC	Point of Curvature	INV.	Invert		Water Valve
PG.	Page	PRC	Point of Reverse Curvature	C.B.S.	Concrete Block & Stucco		Wood Fence
		N.R.	Non-Radial Curve	Conc.	Concrete		Vinyl Fence
				C/S	Concrete Slab		Chain Link Fence

NOTES:
1. The entire map encompassing this survey is recorded in Map Book 5, Pages 36-37.
2. No elevations shown on survey.
3. Underground improvements and utilities not located.
4. Bearings refer to plat datum and to the centerline of PELICAN LANE as being N23°43'09"W.
5. Description provided by client.
6. No search for encumbering instruments was made by surveyor.
7. Error of closure meets or exceeds 1:7500 feet.
8. Fences shown are located with an accuracy of ±0.2'.

CLIENT INFO
RAYMOD ROYER
3 PELICAN LANE
PALM COAST, 32136

STEPHENSON, WILCOX & ASSOCIATES, INC. CA#27726·LB#7672
2729 E. Moody Blvd., Ste. 400
PO Box 186 Bunnell FL 32110
Phone: 386.437.2363 · Email: info.swa@gmail.com
CIVIL ENGINEERS • LAND SURVEYORS • CONSULTANTS • PLANNERS

JOB TYPE:	FIELD DATE	OFFICE DATE	JOB NO.	BY:
Boundary	07/17/24	07/31/24	24-3014	MM
Site Plan				
House Stake				
Formboard				
Foundation				
Final				

I hereby certify that the survey represented hereon meets or exceeds the minimum standards established pursuant to Section 472.027, Florida Statutes, and adopted in Chapter 5J-17 Florida Administrative Code.

07312024

DAN A. WILCOX Jr., PSM No.5749, PE No. 57633
Not valid without the signature and the original raised seal of a Florida Licensed surveyor and mapper.

SHEET 1 of 1

\\Mycloudpr4100\swa-01\CAD SERVER 2014NOV12\SWA\Cad Server\sdsk projects\0000-Flagler\000-PLATS\RiverBeach\Lot 13.dwg

From:	Ray
To:	Simone Kenny, AICP
Subject:	Re: August 12, 2025 Planning and Development Board Agenda
Date:	Friday, August 29, 2025 4:03:42 PM

Hello Simone ,

I only have an ordinance document of 2012 for building a small, medium or large second detached structure on one's property. My application renewal states the medium size of 62 sqft. to 100 sqft.. I seem to have trouble reaching what are the minimum height required for small , medium or large sized structures.

Plus I've had two different applications with a work shop of some departments present to Adam Mengal stating my request can reach the height up to 12' and any further needs I believe another variance request.

So as of now I've been approved for the 12' L x 8' W to the 9'7" H being restricted to 4' minimum height. So where is members of the Zoning and Planning Board arriving on such 4' restricted height. This restriction will bring hardships for installing the mechanical equipment and to safely maintain and make repairs.

This wasn't brought up in early statements in front of the Zoning and Planning but was at earlier workshops. At these workshops I was directed by staff many of these components will need permits after building the Pool House structure.

Examples : like plumbing to electrical and to meeting all building codes for the requested structures including the 4' wall to pool and 12' L x 8' W x 9' 7" H of building structure for the Pool House.

I've tried to reach other placements for the Pool House to reach only further hardships by elements of existing home construction to going outside recommended engineering specifications for the installation of the swimming jets system.

To the Height I requested earlier for 10' variance but trying to attain the 9'7" to hopefully not exceed after final roofing material is completed. I will also state that if possible to go lower than 9'7" if it brings a better matching of the gable roof on the main residence home. I've also stated from the previous review hearing that this Pool House will match my residential home.

Examples: Will be on a code approved 12' L x 8 ' W slab foundation and 8' wall matching block. The gable roof will match but may be a metal roof application.

I've always been in good faith about this application request and have shared above information than really required.

FYI : To Dan statements of Chris from a Manufacturer Distributor Wholesaler. Chris basically stated on my follow up he had a general conversation about the installation of the swimming jets system. Chris stated after learning about my environment of salt air and weather conditions. Chris stated in housing the system will bring less maintenance repairs to better conditions for longer operational periods.

Chris stated he never recommended any housing heights and that he mainly only sales units. He provides engineering advice in literature for peek operations installation instructions. Chris clearly stated all installations are done by pool contractors. The installation are also usually performed to meet their clients high expectations for custom designs that still meet engineering specifications for installation specifications.

I'm putting this in layman terms and hopes to reach a better understanding and consensus by the Zoning and Planning Board.

Please contact me if there is any questions. I will be patiently waiting for how we continue to arrive at 4' as our River Beach Subdivision Restrictions is 4' only on survey property lines. It clearly states no fence and material used is restricted at 4' height.

This was litigated by neighboring parties at the Flagler County Courts ruled 2009 that the

henges over 4’ violated the River Beach Subdivision as it blocked the view of one of the amenities being the River Canal.
Thanks,
Raymond R. Royer Jr.
Janice Paxson (Wife)
3 Pelican Lane
Flagler Beach, Florida 32136
(610)636-5826
fatboy6@ptd.net
Sent from my iPhone

> On Aug 8, 2025, at 2:20 PM, Simone Kenny, AICP <SKenny@flaglercounty.gov> wrote:
>
> Hello Applicants,
>
> The Agenda and Backup for the August 12, 2025 Planning and Development Board have been published and can be accessed here.
>
> Thank you and have a great weekend,
> Simone

Simone Kenny, AICP
Senior Planner
E: SKenny@flaglercounty.gov | V: 386-313-4067 | W: www.flaglercounty.gov
Flagler County Board of County Commissioners
Bunnell, FL 32110

The mission of Flagler County is to provide high-quality services through a responsive workforce committed to excellence, integrity, in collaboration with the cities and to act as a fiscally responsible steward.

From:	PenTeleData Webmail
To:	Simone Kenny, AICP; Hannah Lademann
Cc:	fatboy6; peter
Subject:	Original Height up to 10" on structural request
Date:	Friday, March 27, 2026 11:54:57 PM

To Whom It May Concern,

I attended my TRC scheduled meeting on March 18th to revisit my applications and discuss BOCC January 12, 2026 appeal findings.
My orignal request plus numerous hearings has always stated my request was for 10' with possible built height of 9'7" at the peek point on a gable roof. That will match the residential home gable roof. The 3" buffer is to protect from going over the height as many factors will apply, if a metal roof is installed or the height grade of the 8'x12' slab differs from the surveyed elevations.
The TRC stated in 2025 that this structure can go up to 12' and anything after that will require another application to go above 12' height.
The TRC requested on 3/18/2026 if possible to show why the structure has to be built above the 4' already approved. My response was that I will try my best to get a letter from Tajimir Davis Engineering and Architect who will be drafting the pool and structural building to meet zoning permits. They were recommended by
Ortiz Building and Pool Contractor who will be doing most of the construction. The electrical will be by Anchor Electric installing a 200 amp service for many appliances in this custom pool application. I also stated there is no height limitations on a Pool Pump built structure by Code as did my Attorney, Peter R. McGrath,P.A. Also, my file has a letter from the BADU swim jet Speck Pumps that states they don't evaluate, approve, or disapprove site-specific strutures, neighboring installations, or local zoning interpretations. It also includes that any application of our general guidance to specific projects should be reviewed by the appropriate design professsionals, installers, or local authorities to ensure compliance with all applicable codes and conditions.
They go on to say, we remain available to provide general technical information related to the swim jet system itself, should it be helpful; however, we are not positioned to arbitrate or interpret matters between neighboring parties.
Please review the letter as it has many others statements refering to the overall pool equipment configuration.
Two Planning and Development Board members mentioned their pool pump structures and height to which I stated I don't care what was built and my preferences are to meet my personal safety. As well as daily, weekly and monthly maintenances that will protect my investment from the harsh environment living by the eastern Atlantic ocean.
This email was requested by the TRC to reitterate once again the height. I will be on Monday March 30th to complete another application so the due process is followed with letters being sent and another yard sign posted for public notice of the Planning and Development Board's Meeting on April 14 at 6pm.

Thank you,

Raymond Royer

FLAGLER COUNTY PLANNING AND DEVELOPMENT BOARD REGULAR MEETING
Flagler County Government Services Building,
1769 East Moody Blvd., Board Chambers, Bunnell, FL

MEETING MINUTES

Tuesday, September 9, 2025, at 6:00 P.M.

(Approved at October 10, 2025 PDB Meeting)

1. **Roll Call:** The meeting was called to order by the Chair and a quorum was present.

   Members Present: Michael Boyd (Chair), Ron Long, Timothy Conner, Michael Goodman, Mark Langello and Dan Wilcox.

   Members Absent: Anthony Lombardo (Vice-Chair)

   Present: Adam Mengel, Growth Management Director; Chuck Merenda, Assistant Director; Simone Kenny, Senior Planner; and Hannah Lademann, Planner.

   Board Counsel: Sarah Spector, Assistant County Attorney

2. Pledge to the Flag.

   Mr. Langello informs the Board and public that he has an ongoing medical issue causing pain and medication that may cause him to be groggy. He wants to give a heads up that should the pain be to much, he may need to excuse himself from the meeting early.

3. Approval of August 12, 2025 minutes.

   Motion to approve by: Ron Long
   Seconded by: Mark Langello
   Motion carried unanimously.

Quasi-Judicial Process: The audience should refrain from clapping, booing or shouts of approval or disagreement. To avoid potential legal ramification and possible overturning of a decision by the Courts, a public hearing must be fair in three respects: form, substance and appearance.

Time limits will be observed:
Staff – 10 minute presentation.
Applicant – 15 minute presentation (unless time extended by consensus of Board).
Public Comment – 3 minutes per speaker, 5 minutes if speaking on behalf of a group.
Applicant Rebuttal and Closing Staff Comments – 10 minutes each.

Board Secretary swears in all Applicants and all members of the Public who wish to speak on any item on tonight's agenda.

MOTION: To deviate from the published agenda and move Item #10 to Item #4 as the Applicant has been previously heard before the Board. He would like to ensure the applicant has a full Board, with fresh minds.
Motion by: Michael Goodman
Seconded by: Ron Long
Motion carried unanimously.

4. Quasi-judicial requiring disclosure of ex parte communication:
   Project No. 2025080063 – **REQUEST FOR A VARIANCE IN THE R/C (RESIDENTIAL LIMITED COMMERCIAL) DISTRICT** – request for a Variance in the R/C (Residential Limited Commercial) District for a Pump House at 3 Pelican Lane in the River Beach Subdivision. Parcel Number: 23-11-31-5300-00000-0130; 7,500+/- square feet (0.17+/- acres). Owner/Applicant: Raymond Royer Jr. (AR No. 5921). *(PDB*)

   Board Comments: Mr. Conner asks staff for clarification on how many times an applicant can bring the same item in front of the Board for consideration. He brings forth concerns that this item has been disapproved by this Board in February and appealed to the Commission, then reheard in July and August without approval. Ms. Spector confirms that our code does not restrict an applicant for reapplying for a variance application after being denied.

   Staff Presentation: Simone Kenny, Senior Planner.

   Mr. Long confirmed that the Applicant has the original variance granted in February with the four (4) foot height restriction. Staff confirms.

   Applicant Presentation: Raymond Royer, Jr., Owner. Recaps his previous statements from prior meetings. He also shares a video with the Board demonstrating the size of the pumps.

   Mr. Goodman clarifies the necessity of covering the equipment due to the proximity to the beach. He states that the video Mr. Royer just showed has the equipment outside but stated he needs to cover the equipment due to his proximity to the beach. Mr. Royer confirms and also states he would like to cover the equipment for aesthetics/matching his home.

   Public Comments:

   Dan O'Connell, resident of 7 Mockingbird Lane. He shares a PowerPoint presentation with the Board detailing the previously approved variances, the specs/sizes of the pumps from the sales brochure, and a site plan showing that the computer generated images are misleading. He asks that the variance request be denied.

   Maureen Brunk, resident of 5 Cardinal Lane. She states she has rewatched the recordings on all the previous hearings and due to the fact not all members were present at each meeting, she would like to remind them of the facts. She states that when Mr. Royer purchased this property, he was aware of the size of the lot (being undersized) and the small subdivision consisting of private roads. She states that he has previously addressed her garage as an example of non-compliant structures in the subdivision and contests that he property was developed in 1978 prior to the zoning restrictions. She states that the two recent pools/pool equipment put in the subdivision were able to

appropriately size their pool and permit them without requiring a variance. She asks that the variance request be denied.

Jackie O'Connell, resident of 3 Mockingbird Lane. She states this is her third time speaking in front of this Board regarding the size of this pumphouse. She states that he repeatedly changes his request and makes statements with no material evidence or proof to back up the claims. He states that she has no objections to Mr. Royer receiving permission for a pool or pump house, rather is opposed to the size of the pump house in proximity to Mockingbird Lane. She asks that the variance request be denied as the height is unnecessary to fit the pumps and this is a self-created hardship.

Mr. Long initiates Board discussion relating to the pumps. He states he reached out to numerous contractors from Flagler and Volusia Counties inquiring on whether the current approved pumphouse would accommodate the pumps as described. He states each contractor affirmed that the size/height of the structure as previously approved was sufficient, the only caveat being some of the contractor's recommended ventilation to the structure for the heat of the pumps – but that this would be necessary regardless if the structure was 4' or 9' in height. Mr. Wilcox states that he also did research regarding the pumps and that he reached out to the Baudu manufacture in which they advises that an enclosed structure with more height allows for better ventilation of the pumps. He suggests a middle ground as he believes a 4' height restriction is insufficient.

Mr. Conner states that the problem with the heat load argument is that we don't have any evidence before the Board today to support it, other than hearsay comments. He reminds the Board that this is an evidentiary hearing requiring the applicant to bring forth such supporting evidence for his request. He states that he doesn't doubt that a heat load requirement exists, but that there is no evidence before him today to state whether it can be contained with a 4' or 10' high structure.

Mr. Goodman states that he is a visual person and in effort to understand the request he has driven by the subject property to assess. He states he believes the concerns of the neighbors is nonsense, as he does not believe the pumphouse structure to be obstructive, regardless of the height. Mr. Wilcox states he agrees with Mr. Goodman in regard to the sight triangle visibility perspective. He states he also visited the subject property, and that the volume of the structure does not support a visibility issue from the intersection. Mr. Langello states that he disagrees with Mr. Goodman's statement that the neighbors' arguments are nonsense. He does agree that not all concerns of the neighbors are applicable to the specific request as the height of the structure holds no bearing on the drainage. He states that the character of the neighborhood and how the neighbors perceive is a reasonable concern. He states that the Board has been very generous in their previous approvals allowing Mr. Royer to construct a pool/pool deck/and pumphouse on his property. He states that he could build this on his property today, however, is asking for more that Mr. Langello believes exceeds the minimum relief necessary. He states there is a difference between what someone wants on their property versus what they need in order to function, and he believes the Board has given the approval for the minimum relief necessary in order for the property to function with a pool. Mr. Goodman asks the Board if any of them would be willing to consider a 6' height restriction as opposed to the current 4' height restriction. Mr. Langello states that he believed the reason for the higher pump house request was for privacy concerns. He states that there are other ways to achieve privacy with vegetation. Mr. Long states that he is standing with the current approval as the Board has given the minimum relief necessary. He reminds Mr. Goodman that the reason for the 4' height

restriction was for concurrence with the fence. Mr. Langello restates Mr. Conners' previous statement that this is an evidentiary hearing and that it appears if they were to vote tonight Mr. Royer would not have the majority necessary for approval. He states that it is the applicants right to reapply, and if he were to do so and brought in substantial evidence from an engineer supporting that the pumphouse requires a certain height for ventilation of those specific pumps. Mr. Conner summarizes the previous approved variances given to the applicant, and references LDC Section 3.07.03.E.4 stating that they grant the minimum relief necessary. Mr. Conner states if there is something the Board is missing to support that additional relief is necessary, it is the applicants responsibility to provide that, but that it has not been presented to the Board tonight.

MOTION: The Planning and Development Board finds that all variance criteria as listed in the guidelines at Land Development Code Section 3.07.03.E have been met and therefore approves Project No. 2025080063 for a 22.34 left (West) street side setback variance from the maximum allowed 35 percent lot coverage for a pump house at 3 Pelican Lane (Parcel No. 23-11-31-5300-00000-0130).

Motion to approve by: Michael Goodman
Seconded by: Dan Wilcox

Ron Long – Nay
Dan Wilcox – Ay
Timothy Conner – Nay
Michael Goodman – Ay
Mark Langello – Nay
Michael Boyd (Chair) – Ay

Motion failed 3-3 (Long, Conner, and Langello opposed). The item has been denied.

5. Quasi-judicial requiring disclosure of ex parte communication:
CONTINUED FROM AUGUST 12, 2025 PLANNING AND DEVELOPMENT BOARD REGULAR MEETING
Project No. 2025050047 – **REQUEST FOR A VARIANCE IN THE R-1 (RURAL RESIDENTIAL) DISTRICT** – Request for a Variance in the R-1 (Rural Residential) District for an Addition to a Single-family Dwelling at 4278 Old A1A South. Parcel Number: 09-11-31-0000-01080-0021; 28,629+/- square feet (0.66+/- acres). Owners: Steve and Jeanne Burkhardt, H&W/Applicant: Robert E. Dickinson (AR No. 5693). *(TRC, PDB)*

Board Comment: None

Staff Presentation: Simone Kenney, Senior Planner

Applicant Presentation: Robert Dickinson, Applicant on behalf of the owners. He states that he highlighted in red on the site plan the key elements that play into their need for the variance.

Mr. Langello asks if there is any hardening on the waterway behind the home. Mr. Dickinson states he believes it is coquina that slopes down quite a bit (approximately 15-20' in grade change). Mr. Langello asks how close that grade change is to the addition. Mr. Dickinson points out the proposed grade near the rear of the addition and states in that location it is pretty flat. Mr. Conner asks who owns the property between the rear of the home and waterway. Staff states on Mr. Dickinsons behalf

Instrument No: 2025038206 9/17/2025 8:58 AM BK: 2991 PG: 1571 PAGES: 3 -
RECORDED IN THE OFFICIAL RECORDS OF Tom Bexley, Clerk of the Circuit Court & Comptroller Flagler, FL

FLAGLER COUNTY
PLANNING AND DEVELOPMENT BOARD ORDER NO. 5921
PROJECT NO. 2025080063

Owner: Raymond R. Royer Jr. and Janice L. Paxson
Applicant: Raymond R. Royer Jr.
Location: 3 Pelican Lane, Flagler Beach, FL 32136
Parcel #: 23-11-31-5300-00000-0130
Legal Description: Lot 13 and the South 8 feet of Lot 16, River Beach, according to the map or plat thereof as recorded in Plat Book 5, Page 36, Public Records of Flagler County, Florida

Request: This request is for a 22.34 foot left (West) street side setback variance from the minimum required 25 foot street side setback and a 1.2 percent lot coverage variance from the maximum 35 percent lot coverage in the R/C (Residential/Limited Commercial Use) district at 3 Pelican Lane.

Section 1. Findings.

In accordance with Section 3.07.03. of the Flagler County Land Development Code, the Planning and Development Board, having considered the application at their regular meetings on September 9, 2025 testimony and evidence in the record presented by staff and the parties, other written documentation of record, and comments made during the public hearing portion of the proceedings, finds that the Owners do not meet the criteria of Section 3.07.03.E.1. through 4.:

1. There are extraordinary and exceptional conditions pertaining to the particular piece of property in question because of its size, shape, topography, or other unique features that, when considered in whole or in part, creates an unnecessary hardship.

   The subject property is an undersized Lot of Record being part of the River Beach subdivision dating back to 1959 and being approximately 1,500 square feet under the minimum lot size of 9,000 square feet in the R/C district.

2. Such conditions were not created by the affirmative actions of the applicant and the applicant has acted at all times in good faith.

   This is a before-the-fact variance request and the applicant is seeking permission before applying for a building permit.

3. The variance, if granted, would not cause substantial detriment to the public health, welfare, safety, and morals of the community or impair the purpose and intent of this article.

The granting of a variance will not cause substantial detriment to the public health, welfare, safety, and morals of the community. The applicant has submitted renderings showing that the pump house will be designed and built to be consistent with the existing dwelling.

4. No variance may be granted for a use of land or building that is not permitted by this article.

   Pools, pool decks, and pump houses are permitted accessory uses and structures within the R/C zoning district.

A variance, if granted, shall be the minimum variance necessary to alleviate the hardship. For purposes of this section, an unnecessary hardship shall mean that without the granting of the variance the owner will be deprived of all reasonable use of the property as allowed in the zoning district.

The newly proposed location of the pump house reduces the necessary relief for the street side setback but increases the necessary relief for lot coverage. The current four-foot height limitation does reduce the accessibility and use of the pump house. While the requested variances are before-the-fact and the property is an undersized Lot of Record, the hardship is self-created. The Board could not reach a majority conclusion related to the need for the variances in excess of those as previously approved by the Board.

Section 2. **Denied.**

Based on the foregoing and following the September 9, 2025 hearing of the Planning and Development Board, the requested variances stated above are denied, with a 3-3 vote in favor of approval (tie vote results in a denial of the request).

Section 3. Appeal Rights.

An aggrieved party, including the local governing body, may appeal a Planning and Development Board's order regarding a variance request to the Board of County Commissioners of Flagler County. The appeal shall be conducted in accordance with Section 3.07.03.C. of the Land Development Code. The original application for appeal, accompanied by the required one hundred fifty dollar ($150.00) application fee, with the cost of any required public notice to be borne by the applicant, shall be filed with the Planning and Zoning Director no later than thirty (30) calendar days of the rendition date shown below.

SO ORDERED AND RENDERED, this 16th day of September 2025, by the Planning and Development Board of Flagler County, Florida, by and through its Chairman.

FLAGLER COUNTY
PLANNING AND DEVELOPMENT BOARD

ATTEST:

Adrian Mayol for
Hannah Lademann, Board Secretary

Michael Boyd, Chairman

Approved as to Form:

Sarah Spector, Assistant County Attorney

CERTIFICATE OF SERVICE

PLANNING AND DEVELOPMENT BOARD ORDER NO. 5921
PROJECT NO.: 2025080063

As Secretary to the Planning and Development Board, I hereby certify that on this 19th day of September, 2025, copies of this Planning and Development Board Order No. 5921 were mailed first class, postage prepaid or sent by inter-office government mail to the following:

Raymond R. Royer Jr. and Janice L. Paxson
3 Pelican Lane
Flagler Beach, FL 32136

Attested by: _____ for
Hannah Lademann, Board Secretary

ITEM 9B – THIS ITEM WILL NOT BE HEARD: QUASI-JUDICIAL – PROJECT NO. 2025080074 – REQUEST FOR A REZONING FROM THE AC (AGRICULTURAL) DISTRICT TO THE PUD (PLANNED UNIT DEVELOPMENT) DISTRICT. PARCEL NUMBERS: 28-12-31-0000-01010-0000 AND 29-12-31- 0000-01010-0000; PARCEL SIZE: 119+/- ACRES. OWNER: MPC LOTS LLC/APPLICANTS: RICHARD SMITH AND NIKA HOSSEINI. (AR NO. 5931)

There has been a request for the BOCC to open and continue to the Board's March 16, 2026, Regular Meeting at 5:30 p.m.

ITEM 9C – QUASI-JUDICIAL – PROJECT NO. 2025080063 – REQUEST FOR AN APPEAL OF THE PLANNING AND DEVELOPMENT BOARD'S DECISION DENYING VARIANCES FROM THE MINIMUM REQUIRED REAR SETBACK, MINIMUM REQUIRED STREETSIDE (WEST) SETBACK, AND MAXIMUM LOT COVERAGE REQUIREMENT FOR A PROPOSED POOL, POOL DECK, AND PUMP HOUSE IN THE R/C (RESIDENTIAL/LIMITED COMMERCIAL) DISTRICT AT 3 PELICAN LANE. PARCEL NUMBER: 23-11- 31-5300-00000-0130; 7,500+/- SQUARE FEET (0.17+/- ACRES). OWNERS: RAYMOND R. ROYER, JR., AND JANICE L. PAXSON/APPELLANT: RAYMOND R. ROYER, JR./AGENT: PETER R. MCGRATH, ESQ. (AR NO. 6024)

This item was requested by Adam Mengel, Growth Management Director:

THIS SPACE INTENTIONALLY LEFT BLANK

(Item 9c – Continued)

FLAGLER COUNTY BOARD OF COUNTY COMMISSIONERS
PUBLIC HEARING/AGENDA ITEM #9c

SUBJECT: QUASI-JUDICIAL – Project No. 2025080063 – Request for an Appeal of the Planning and Development Board's Decision Denying Variances from the Minimum Required Rear Setback, Minimum Required Streetside (West) Setback, and Maximum Lot Coverage Requirement for a Proposed Pool, Pool Deck, and Pump House in the R/C (Residential/Limited Commercial) District at 3 Pelican Lane. Parcel Number: 23-11-31-5300-00000-0130; 7,500+/- square feet (0.17+/- acres). Owners: Raymond R. Royer, Jr., and Janice L. Paxson/Appellant: Raymond R. Royer, Jr./Agent: Peter R. McGrath, Esq. (AR No. 6024).

DATE OF MEETING: January 12, 2026

OVERVIEW/SUMMARY: This request is quasi-judicial in nature and requires disclosure of ex parte communication.

An appeal was filed by the Owners on October 16, 2025, related to the Planning and Development Board's most recent variance denial for variances related to the construction of a pool, pool deck, and pump house at 3 Pelican Lane. Specifically, the Appellants'/Owners' most recent appeal requests:

> "Owners will be deprived of all reasonable use of the property as allowed in the zoning district. At the Technical Review Committee (TRC) which two reviews stated this application property R/C District can go to 12' high on the proposal structure. Applications requested in February to request 10' high as a buffer. But matching the residential home the owners would try reaching a 9'7" gable roof for pleasing appeal."

The appeal application cites the Planning and Development Board's Order No. 5921 from its September 9, 2025, regular meeting, where the Board's decision is provided by the appellant as: "3-3 vote in favor of approval (tie vote results in a denial of the request)."

This is Mr. Royer's second appeal to the Board of County Commissioners. His first appeal – like this appeal – sought the elimination of the Planning and Development Board's four-foot height limitation on the proposed pump house, with all other requested variances for the pool and pool deck's location and a variance to exceed lot coverage all approved by the Planning Board at its February 11, 2025, regular meeting. The Planning and Development Board's approval (vote on the motion was unanimous) stated:

> "The Planning and Development Board find that all the variance criteria as listed in the guidelines at Land Development Code Section 3.07.03.E have been met and therefore approves Project No. 2024110031 for 3.49 foot rear (North) variance from the minimum required 10 foot rear setback for a pool and pool deck, a 25 foot left streetside (West) variance from the minimum required 25 foot streetside

(Item 9c – Continued)

FLAGLER COUNTY BOARD OF COUNTY COMMISSIONERS
PUBLIC HEARING/AGENDA ITEM #9c

setback for a pool and pool deck, a 22-foot left streetside (West) variance from the minimum required 25-foot streetside setback for a pump house, a 0.82 percent lot coverage variance from the maximum allowed 35 percent lot coverage at 3 Pelican Lane (Parcel No. 23-11-31-5300-00000-0130), subject to the following condition:

1. The pump house is to be within the boundaries of the block wall (pool barrier) and not taller than 4 feet in height."

This first appeal was heard by the Board of County Commissioners at its May 5, 2025, regular meeting. After considering the appeal request, the Board denied (on a unanimous vote) the appeal (as copied below from the approved meeting minutes):

> "A motion was made by Commissioner Hansen to deny the appeal on the basis that the Planning and Development Board's decision was supported by competent substantial evidence, the [sic] due process was accorded to the applicant, and the essential requirements of law, primarily the four criteria for variances within the LDC, have been observed. Seconded by Commissioner Carney. Chair Dance called the question. Motion carried unanimously."

Unlike other land use requests, variance requests are not time-barred: a reapplication could be made at any time, and the Board's comments from the May 5, 2025, meeting concluded with this acknowledgement (again from the minutes):

> "Chair Dance noted Mr. Royer would have to re-apply, bring additional evidence, and modify his plan."

Mr. Royer did file a subsequent variance application (Project No. 2025050043), which was ultimately denied at the Planning and Development Board's August 12, 2025, regular meeting following a tie vote (2-2) on a motion to approve: a tie vote results in a denial of the request (see Order No. 5689). Due to discrepancies in the vote (and the County's hearing process) from the August Planning Board meeting, Mr. Royer was allowed by staff to reapply for his variance requests without requiring an application fee, seeking (according to his application):

> "Hardship relief on undersize lot, variance relief for pool housing structure: on height roof coverage."

The Planning and Development Board considered his third variance application at the Board's September 9, 2025, regular meeting, which again ended in a denial – a 3-3 tie vote on a motion to approve – of his variance requests. Mr. Royer had requested that County staff allow this appeal application to be submitted without an application fee, which was rejected by County staff: this delayed his appeal application submittal.

(Item 9c – Continued)

FLAGLER COUNTY BOARD OF COUNTY COMMISSIONERS
PUBLIC HEARING/AGENDA ITEM #9c

As a reminder to the Board, the subject parcel lies on the North side of Pelican Lane, East of Mockingbird Lane):



The Board of County Commissioners is the appellate authority following a decision by the Planning and Development Board pursuant to Section 3.07.03.C.1 of the Land Development Code. In turn, the decision of the Board of County Commissioners may ultimately be appealed to the Circuit Court. It is noted that the Board's denial of Mr. Royer's original appeal was not further appealed to the Circuit Court.

The appeal must be reviewed based on the record presented at the Planning and Development Board meetings and also argument of the appellant before the County Commission. No new evidence or testimony may be provided. In deciding, the Board of County Commissioners must make three determinations:

1. **Whether the Planning and Development Board's decision was supported by competent substantial evidence;**
2. **Whether due process was accorded; and**

(Item 9c – Continued)

FLAGLER COUNTY BOARD OF COUNTY COMMISSIONERS
PUBLIC HEARING/AGENDA ITEM #9c

3. **Whether the essential requirements of law (primarily, the four Criteria for Variances within the LDC) have been observed.**

As a variance request, the necessary detail is provided to the Planning and Development Board through a site plan. Initial site plan requirements for both variances and special exceptions are listed at LDC Section 3.07.03.A.2. The Planning and Development Board considered the applicants' site plans, which are included in the back up material attached hereto. It is noted that since the initial variance request, Mr. Royer had added to his submittal elevation views depicting the proposed construction.

Specific to variances, the LDC requires (at LDC Sec. 3.07.03.E.) demonstration that the four variance guidelines are considered by a variance applicant, with these guidelines typically depicted on a site plan and through a written narrative (and where "the board [Planning and Development Board] shall be guided by the following"):

> "*Variance guidelines.* A variance may be granted from the terms and provisions of this article where, owing to special conditions relating to the property, a literal enforcement of the provisions of this article will, in an individual case, result in unnecessary hardship. Variances may be granted by the Planning and Development Board in such an individual case of unnecessary hardship upon a written finding based on competent, substantial evidence in the official record that:
>
> 1. There are extraordinary and exceptional conditions pertaining to the particular piece of property in question because of its size, shape, topography, or other unique features that, when considered in whole or in part, creates an unnecessary hardship; and
> 2. Such conditions were not created by the affirmative actions of the applicant and the applicant has acted at all times in good faith; and
> 3. The variance, if granted, would not cause substantial detriment to the public health, welfare, safety, and morals of the community or impair the purpose and intent of this article; and
> 4. No variance may be granted for a use of land or building that is not permitted by this article.
>
> A variance, if granted, shall be the minimum variance necessary to alleviate the hardship. For purposes of this section, an unnecessary hardship shall mean that without the granting of the variance the owner will be deprived of all reasonable use of the property as allowed in the zoning district."

The Planning and Development Board's findings regarding these criteria are stated in the Planning Board's Order regarding the variance and are reflected in the Planning Board's technical staff report attached to this report.

(Item 9c – Continued)

FLAGLER COUNTY BOARD OF COUNTY COMMISSIONERS
PUBLIC HEARING/AGENDA ITEM #9c

It is assumed that the Appellants' appeal request claims that the four (4) foot-height limitation originally imposed on the pump house (through the original variance approval) deprives him of his use of the pump house in the intended manner. However, the final paragraph of the Variance guidelines listed above states, ***"A variance, if granted, shall be the minimum variance necessary to alleviate the hardship."*** (Emphasis added). The Planning and Development Board's intent with the imposed condition was to ensure that the granted variances were the minimum variances necessary to alleviate the hardship, providing space for a pump house but arguably not for housing pool furniture.

This appeal iteration alleges that the "Owners will be deprived of all reasonable use of the property as allowed in the zoning district." Staff counters that the Planning Board's decision – with two tie-votes – was indicative of the difficulty posed by his request, where the Planning Board seeks to balance reasonable requests for relief from the strict application of the Land Development Code's requirements with limitations that respect the adjacent neighborhood and uphold the Code's intent to protect the health, safety, and general welfare. In staff's opinion, the Planning Board correctly weighed the evidence and testimony provided in the variance application and at the public hearing, and could not come to a majority consensus resulting in approval; however, the deprivation of "all reasonable use" is not the end result. The previously granted variances – inclusive of the pump house height limitation – provided for the proposed pool development. In the end, the "reasonable use" was not deprived, but instead it was conditioned on a requirement to limit the pump house height. The appeal goes on to state that: "At the Technical Review Committee (TRC) which two reviews stated this application property R/C District can go to 12' high on the proposal structure." This is correct, but the Planning Board opted to restrict the pump house height to less than 12 feet as a condition of granting the requested variances. This is the Board's prerogative: if the pump house can be placed on the parcel without the variances, then the 12-foot height applies. The appeal further (appears) to seek a 9-foot, 7-inch pump house height to match the height of the existing dwelling's gable roof: "But matching the residential home the owners would try reaching a 9'7" gable roof for pleasing appeal." The Board heard this proposal, and the vote – effectively considered at two separate consecutive meetings – resulted in a tie-vote (and a denial of the variance request) at each of these Planning and Development Board meetings.

This agenda item is:
__X__ quasi-judicial, requiring disclosure of ex-parte communication; or
_____ legislative, not requiring formal disclosure of ex-parte communication.

STRATEGIC PLAN:
Focus Area: Effective Government
- Goal 2 – Build & Maintain Relationships to Support Effective & Efficient Government
  - Objective EG 2.4: Establish joint strategies to identify and address needs through leveraging of local resources.

(Item 9c – Continued)

FLAGLER COUNTY BOARD OF COUNTY COMMISSIONERS
PUBLIC HEARING/AGENDA ITEM #9c

DEPARTMENT CONTACT:
Adam Mengel, Growth Management Director, (386) 313-4065

Public notice has been provided for this application according to Land Development Code (LDC) Section 2.07.00.

OPTIONS FOR THE BOARD: As a reminder, the Board of County Commissioners is sitting in an appellate capacity as it relates to this matter. It is limited by LDC Section 3.07.03.C. to determining whether:

1. The Planning and Development Board's decision was supported by competent, substantial evidence;
2. Whether due process was accorded; and
3. Whether the essential requirements of the law have been observed.

The Board of County Commissioners may take ONE of the following actions:

1. APPROVE the Appeal request, overturning the Planning and Development Board's denial of the Variances for the Pool, Pool Deck, and Pump House in the R/C (Residential/Limited Commercial Use) District at 3 Pelican Lane. With this course of action, the Board of County Commissioners will be **OVERTURNING** the decision of the Planning and Development Board's condition to limit the height of the proposed Pump House to Four (4) Feet. The Board of County Commissioners will need to set the maximum height of the Pump House; otherwise, the maximum height will be limited to a maximum height of twelve (12) feet.

2. DENY the Appeal request, upholding the Planning and Development Board's denial of the Variance – along with affirming the original Variance condition to limit the height of the proposed Pump House to Four (4) Feet at 3 Pelican Lane. With this course of action, the Board of County Commissioners will be **AFFIRMING** the Planning and Development Board's decision to grant the Variance *with the condition as to the Pump House as originally imposed by the Planning and Development Board.*

3. REMAND the Variance denial back to the Planning and Development Board for further proceedings with direction on how the Planning and Development Board failed to base its decision on competent substantial evidence, accord due process, and/or observe the essential requirements of law. The Variance use is held in abeyance until the Planning and Development Board renders a decision on the Variance as remanded.

4. CONTINUE the Board of County Commissioners' review of the appeals to a time and date certain. A continuance should be for the appellants or for staff to provide additional information to the Board of County Commissioners.

(Item 9c – Continued)

FLAGLER COUNTY BOARD OF COUNTY COMMISSIONERS
PUBLIC HEARING/AGENDA ITEM #9c

It should be noted that, unlike a rezoning request that is limited to no more than one request for the same parcel of land every six months, a variance application submittal is not time-barred (see LDC Sec. 3.07.05.G.). Accordingly, should the Board of County Commissioners uphold the Planning and Development Board's denial of the variance, the owner may (again) immediately refile a variance request with the County for a similar request.

QUASI-JUDICIAL: Commissioner Hansen disclosed having communication with the applicant, Mr. Royer. Stated Mr. Royer was upset about the application denial, so he attempted to plead his case.

Adam Mengel, Growth Management Director, provided a presentation that included a summary of the staff report referenced above.

Commissioner Richardson inquired whether all structures within the community would be required to be four feet in height or less if the appeal request were denied.

Mr. Mengel explained that the Planning Board had considered the number of variances previously granted to the applicant and, as a result, elected to further limit the height of the pump house as a condition of approving the additional variances. He added that the height could be as much as twelve feet.

Commissioner Carney asked how many members serve on the Planning Board.

Mr. Mengel stated that there are typically seven members on the Planning Board; however, only six members were present at the September 9th meeting.

Commissioner Pennington requested confirmation that there had been a tie vote at the September 9th meeting.

Mr. Mengel confirmed that there was a tie vote.

Commissioner Hansen expressed concern regarding potential unfairness, noting that three Planning Board members had previously voted in favor of approving the variance request. He further observed that there had also been a tie vote on Mr. Royer's initial variance request.

Mr. Mengal commented on the even number of Planning Board members being problematic.

(Item 9c – Continued)

Commissioner Dance stated this is not a denial of due process.

Commissioner Carney agreed that an even number of Planning Board members is problematic. Asked for confirmation that the four-foot limitation was imposed by the Planning Board.

Mr. Mengal responded with yes. Explained how the Planning Board made the determination on the limitation.

Chair Pennington called for the applicant.

Peter McGrath, Appellant's Attorney, stated there has been an assumption that there is a four-foot height limitation with respect to hedges and walls based on a set of covenants and restrictions. Noted he has an opinion letter.

Commissioner Dance asked if the opinion letter is new evidence.

Mr. McGrath answered yes.

Commissioner Dance stated no new evidence could be considered.

Michael Rodriguez, County Attorney, noted new evidence falls outside the scope of the appeal.

Mr. McGrath spoke about how Mr. Royer voluntarily limited the height of the wall and that the restrictions have dropped off his title. Further stated that a six-foot wall would still comply with the Land Development Code (LDC) requirements. He noted that while the LDC does not specifically address pool pump houses, it does regulate accessory structures, and that under those provisions Mr. Royer would be permitted a height of up to twelve feet. Mr. McGrath stated that Mr. Royer intends to construct the pump house to a height of nine feet, seven inches, and is requesting a ten-foot allowance to accommodate minor variation. Emphasized that the pump house must contain two four-horsepower motors, a pool pump, a filtration system, and a pool heater, and that a four-foot height limitation would create a hardship by failing to provide sufficient space for the equipment and adequate ventilation. Further noted that there has been a tie vote on more than one occasion.

Raymond Royer, Appellant, spoke about his due process being violated and the Planning Board members being biased. Added there is no justification on the four-foot limitation.

Mr. McGrath stated the licensed contractor was present to discuss the issue concerning the four-foot limitation on the height of the structure.

(Item 9c – Continued)

Chair Pennington clarified the procedures. Asked whether the Planning Board had discussed the issues of equipment space and ventilation within the structure.

Mr. Mengal stated there had been a suggestion for the pump installer to appear before the Planning Board, but that this did not occur. Added that the pump installation manual was submitted as evidence. Explained that Mr. Royer indicated the additional room would be necessary to accommodate the pumps. Further noted that there is a four-foot height limitation for structures and fencing in front yards, and the shed could not be placed in its current location without a variance. Stated that the Planning Board granted the variance on the condition that the height of the structure be limited to four feet. Also noted that this is a corner lot and further clarified the applicable LDC requirements for the residential zoning district.

Commissioner Dance stated that the four-foot height limitation is not arbitrary.

Mr. Mengal stated it is not. Added that there may be private covenants and restrictions; however, those were not reviewed because the LDC requirements governed the analysis.

There was extensive BOCC discussion on the appeal request.

Mr. McGrath and Mr. Royer gave a rebuttal statement.

Chair Pennington called for public comment and there was none.

Chair Pennington called for public comment.

Tamara Daniels, Contractor Representative, commented on the pool equipment and proposed structure.

Michael Rodriguez, County Attorney, stated only the appellant and interested parties with standing that have been permitted to intervene may present oral argument on the established record, but no new testimony or other evidence shall be taken. Clarified this is not a matter for public comment because this is an appeal limited to the record before it. Asked the BOCC to disregard Ms. Daniel's testimony.

Commissioner Carney inquired what CFMs are.

Mr. Mengal responded with Cubic Feet per Minute. Noted it is measure of air flow.

The BOCC entered into further discussion on the appeal request.

(Item 9c – Continued)

Mr. Rodriguez stated the Planning Board did not render a decision to affirm or overturn. Clarified the rules and procedures and advised the BOCC on how they could take action on the item.

There was BOCC discussion on the variance requests.

A motion was made by Commissioner Dance to remand the variance denial back to the Planning and Development Board for further proceedings, with direction on reviewing the height of the accessory structure and for compliance with the Land Development Code.

Mr. Rodriguez noted what should be included in the motion.

Commissioner Dance asked for clarification.

Mr. Rodriguez clarified.

Chair Pennington asked if the BOCC should vote on the motion without public comment.

Mr. Rodriguez advised the BOCC.

The motion was seconded by Commissioner Carney.

An amended motion was made by Commissioner Dance to remand the variance denial back to the Planning and Development Board for reconsideration of the variance and the additional request for the increase of the height of the accessory structure to 10 feet, and that the variance meets the criteria for a variance under the Land Development Code. Seconded by Commissioner Carney.

Chair Pennington called for a roll call vote.

Tiffani Smith, Deputy Clerk, took a roll call vote and captured the following responses:

- **Commissioner Richardson: "Yes"**
- **Commissioner Hansen: "Aye"**
- **Chair Pennington: "Yes"**
- **Commissioner Carney: "Yes"**
- **Commissioner Dance: "Aye"**

Motion carried unanimously.

Instrument No: 2026009025 3/2/2026 3:01 PM BK: 3034 PG: 754 PAGES: 3 -
RECORDED IN THE OFFICIAL RECORDS OF Tom Bexley, Clerk of the Circuit Court & Comptroller Flagler, FL

FLAGLER COUNTY
BOARD OF COUNTY COMMISSIONERS ORDER NO. 6024
PROJECT NO. 2025080063

Appellants: Raymond R. Royer Jr. and Janice L. Paxson
Owners: Raymond R. Royer Jr. and Janice L. Paxson
Applicant: Raymond R. Royer Jr.
Location: 3 Pelican Lane, Flagler Beach, FL 32136
Parcel #: 23-11-31-5300-00000-0130
Legal Description: Lot 13 and the South 8 feet of Lot 16, River Beach, according to the map or plat thereof as recorded in Plat Book 5, Page 36, Public Records of Flagler County, Florida

Request: The appellants filed an application for the Board of County Commissioners to consider an appeal of the Planning and Development Board's denial (Planning and Development Board Order No. 5921 rendered September 16, 2025 and recorded on September 17, 2025 at Official Records Book 2991, Page 1571, Public Records of Flagler County, Florida) for a 22.34 foot left (West) street side setback variance from the minimum required 25 foot street side setback and a 1.2 percent lot coverage variance from the maximum 35 percent lot coverage in the R/C (Residential/Limited Commercial Use) district at 3 Pelican Lane (Parcel Number: 23-11-31-5300-00000-0130). The appellants specifically requested that:

"Owners will be deprived of all reasonable use of the property as allowed in the zoning district. At the Technical Review Committee (TRC) which two reviews stated this application property R/C District can go to 12' high on the proposal structure. Applications requested in February to request 10' high as a buffer. But matching the residential home the owners would try reaching a 9'7" gable roof for pleasing appeal."

Section 1. **Findings.**

The Board of County Commissioners, having considered the appeal application at its regular meeting on January 12, 2026, testimony and evidence in the record presented by staff and the parties, other written documentation of record, and comments made during the public hearing portion of the proceedings, determined that:

1. Whether the Planning and Development Board's decision was supported by competent substantial evidence;

   The Board found that the Planning and Development Board's decision denying the variance request was neither supported or not supported by competent substantial evidence. The Board's decision denying the

application request was based on the Board's tie-vote resulting in a denial.

2. Whether due process was accorded; and

   The Board of County Commissioners found that due process was accorded to all parties by the Planning and Development Board.

3. Whether the essential requirements of law (primarily, the four Criteria for Variances within the LDC) have been observed.

   The Board of County Commissioners found that the essential requirements of law – including primarily the four Criteria for Variances within the LDC – have been observed by the Planning and Development Board. However, the Board's denial of the application request – due to the tie-vote – necessitates the Board's reconsideration of the variance request on remand to make a determination on the variance application for reconsideration of the variance request inclusive of the increase in height of the pump house accessory structure to 9 feet, 7 inches, finding that the request meets the criteria for approval of a variance under the LDC.

Section 2. **Remanded.**

Based on the foregoing and following the January 12, 2026 hearing of the Board of County Commissioners, the requested appeal stated above is remanded to the Planning and Development Board for reconsideration.

Section 3. **Appeal Rights.**

An aggrieved party, including the local governing body, may appeal a Board of County Commissioners' order regarding an appeal request by filing such appeal with the Circuit Court of Flagler County, Florida, within thirty (30) days of the rendering of the order by the Board. Such appeal shall be by writ of certiorari and shall not be a hearing de novo.

FLAGLER COUNTY
BOARD OF COUNTY COMMISSIONERS ORDER NO. 6024
PROJECT NO. 2025080063

SO ORDERED AND RENDERED, this 2nd day of March 2026, by the Board of County Commissioners of Flagler County, Florida, by and through its Chair.

FLAGLER COUNTY
BOARD OF COUNTY COMMISSIONERS

ATTEST:

D.C.
Tom Bexley, Clerk of the Circuit Court
and Comptroller

Leann Pennington, Chair

Approved as to Form:

Sarah Spector, Assistant County Attorney

Adam Mengel, AICP, LEED AP BD+C

From: Jackie OConnell <[redacted]yahoo.com>
Sent: Tuesday, June 3, 2025 10:02 AM
To: Planning Dept
Subject: Zoning variance

Hello,
Would you confirm whether a new request has been submitted for
3 Pelican Lane, Flagler Beach.

If so, please provide the online (guest) access code for the request.

Will it be presented at July meeting?
Thank you,
Jackie O'C

Please excuse typos! Sent from my iPhone

Adam Mengel, AICP, LEED AP BD+C

From: Hannah Lademann
Sent: Tuesday, June 3, 2025 10:07 AM
To: Jackie OConnell; Planning Dept
Subject: RE: Zoning variance

Good morning,

Yes, Mr. Royer did submit a new variance application for 3 Pelican Lane. You can find it using AR #5689 on our online portal. He is set to be on the June 18th Technical Review Committee agenda and then should subsequently fall on the July 8th Planning and Development Board agenda. Let me know if you have any other questions.

Hannah Lademann
Planner
E: [redacted]flaglercounty.gov | V: 386-313-4069 | W: www.flaglercounty.gov

Flagler County Board of County Commissioners

Bunnell, FL 32110

The mission of Flagler County is to provide high-quality services through a responsive workforce committed to excellence, integrity, in collaboration with the cities and to act as a fiscally responsible steward.

-----Original Message-----
From: Jackie OConnell <[redacted]yahoo.com>
Sent: Tuesday, June 3, 2025 10:02 AM
To: Planning Dept <[redacted]flaglercounty.gov>
Subject: Zoning variance

Hello,
Would you confirm whether a new request has been submitted for
3 Pelican Lane, Flagler Beach.

If so, please provide the online (guest) access code for the request.

Will it be presented at July meeting?
Thank you,
Jackie O'C

Please excuse typos! Sent from my iPhone

Adam Mengel, AICP, LEED AP BD+C

From: Jackie OConnell <[redacted]yahoo.com>
Sent: Thursday, June 19, 2025 8:17 AM
To: Planning Dept; Sean S. Moylan
Subject: Feb 11, 2025 Minutes Correction re Project 2024110031 3 Pelican Lane

Planning/Zoning and Legal Team,

As discussed at the June Planning and Development Board meeting, the minutes from the February Board meeting are being revised for voting correction(s) and will be submitted to the Board at the July meeting. **The February minutes also omit any mention of the Public Comments, submitted via email by me and Ms. Nancye Walls, which were referenced by Mr. Mengel at the February meeting and copies provided to the Board members.** By only referencing the two Public Commenters who spoke in favor of the variance request, and omitting the two who submitted opposition, **there is a significant bias in the meeting minutes and public records.** You'll recall that I alerted you to this omission and sent an objection when Applicant took an appeal to the County Commission.

Please revise the February Board minutes to reflect the public comments in opposition to the variance request which were presented at the February meeting. (These Board minutes may be referenced in the updated variance request which Applicant is pursuing.)

Thank you,

Jackie O'Connell
7 and 8 Mockingbird Lane, FB

336.512.9671 mobile
Excuse brevity and typos, sent from mobile device

Adam Mengel, AICP, LEED AP BD+C

From: Jackie OConnell <[redacted]yahoo.com>
Sent: Thursday, July 3, 2025 1:18 PM
To: Hannah Lademann; Planning Dept
Subject: Re: Zoning meeting July 8 - Agenda

Will the Agenda and Backup for next Tuesday's meeting be posted today? I don't yet see it on your website.
Thanks, Jackie O'Connell
336.512.9671 mobile
Excuse brevity and typos, sent from mobile device

> On Jun 3, 2025, at 10:07 AM, Hannah Lademann <[redacted]flaglercounty.gov> wrote:
>
> Good morning,
>
> Yes, Mr. Royer did submit a new variance application for 3 Pelican Lane. You can find it using AR #5689 on our online portal. He is set to be on the June 18th Technical Review Committee agenda and then should subsequently fall on the July 8th Planning and Development Board agenda. Let me know if you have any other questions.
>
>
> Hannah Lademann
> Planner
> E: [redacted]flaglercounty.gov | V: 386-313-4069 | W: www.flaglercounty.gov
>
> Flagler County Board of County Commissioners
>
> Bunnell, FL 32110
>
> The mission of Flagler County is to provide high-quality services through a responsive workforce committed to excellence, integrity, in collaboration with the cities and to act as a fiscally responsible steward.
>
> -----Original Message-----
> From: Jackie OConnell <[redacted]yahoo.com>
> Sent: Tuesday, June 3, 2025 10:02 AM
> To: Planning Dept <[redacted]flaglercounty.gov>
> Subject: Zoning variance
>
> Hello,
> Would you confirm whether a new request has been submitted for
> 3 Pelican Lane, Flagler Beach.
>
> If so, please provide the online (guest) access code for the request.
>
> Will it be presented at July meeting?
> Thank you,
> Jackie O'C
>
> Please excuse typos! Sent from my iPhone

Adam Mengel, AICP, LEED AP BD+C

From: Hannah Lademann
Sent: Thursday, July 3, 2025 2:08 PM
To: Jackie OConnell; Planning Dept
Subject: RE: Zoning meeting July 8 - Agenda

Yes, it should be posted before the end of the day. They are finishing up some staff reports as we speak.

Hannah Lademann
Planner
E: [redacted]flaglercounty.gov | V: 386-313-4069 | W: www.flaglercounty.gov

Flagler County Board of County Commissioners

Bunnell, FL 32110

The mission of Flagler County is to provide high-quality services through a responsive workforce committed to excellence, integrity, in collaboration with the cities and to act as a fiscally responsible steward.

-----Original Message-----
From: Jackie OConnell <[redacted]yahoo.com>
Sent: Thursday, July 3, 2025 1:18 PM
To: Hannah Lademann <[redacted]flaglercounty.gov>; Planning Dept <[redacted]flaglercounty.gov>
Subject: Re: Zoning meeting July 8 - Agenda

Will the Agenda and Backup for next Tuesday's meeting be posted today? I don't yet see it on your website.
Thanks, Jackie O'Connell
336.512.9671 mobile
Excuse brevity and typos, sent from mobile device

> On Jun 3, 2025, at 10:07 AM, Hannah Lademann <[redacted]flaglercounty.gov> wrote:
>
> Good morning,
>
> Yes, Mr. Royer did submit a new variance application for 3 Pelican Lane. You can find it using AR #5689 on our online portal. He is set to be on the June 18th Technical Review Committee agenda and then should subsequently fall on the July 8th Planning and Development Board agenda. Let me know if you have any other questions.
>
>
> Hannah Lademann
> Planner
> E: [redacted]flaglercounty.gov | V: 386-313-4069 | W: www.flaglercounty.gov
>
> Flagler County Board of County Commissioners
>
> Bunnell, FL 32110
>
> The mission of Flagler County is to provide high-quality services through a responsive workforce committed to excellence, integrity, in collaboration with the cities and to act as a fiscally responsible steward.

>
> -----Original Message-----
> From: Jackie OConnell <[redacted]yahoo.com>
> Sent: Tuesday, June 3, 2025 10:02 AM
> To: Planning Dept <[redacted]flaglercounty.gov>
> Subject: Zoning variance
>
> Hello,
> Would you confirm whether a new request has been submitted for
> 3 Pelican Lane, Flagler Beach.
>
> If so, please provide the online (guest) access code for the request.
>
> Will it be presented at July meeting?
> Thank you,
> Jackie O'C
>
> Please excuse typos! Sent from my iPhone

Adam Mengel, AICP, LEED AP BD+C

From: Jackie OConnell <[redacted]yahoo.com>
Sent: Thursday, July 3, 2025 2:18 PM
To: Hannah Lademann
Cc: Planning Dept
Subject: Re: Zoning meeting July 8 - Agenda

Thanks. Happy 4th to you!
336.512.9671 mobile
Excuse brevity and typos, sent from mobile device

> On Jul 3, 2025, at 2:07 PM, Hannah Lademann <[redacted]flaglercounty.gov> wrote:
>
> Yes, it should be posted before the end of the day. They are finishing up some staff reports as we speak.
>
> Hannah Lademann
> Planner
> E: [redacted]flaglercounty.gov | V: 386-313-4069 | W: www.flaglercounty.gov
>
> Flagler County Board of County Commissioners
>
> Bunnell, FL 32110
>
> The mission of Flagler County is to provide high-quality services through a responsive workforce committed to excellence, integrity, in collaboration with the cities and to act as a fiscally responsible steward.
>
> -----Original Message-----
> From: Jackie OConnell <[redacted]yahoo.com>
> Sent: Thursday, July 3, 2025 1:18 PM
> To: Hannah Lademann <[redacted]flaglercounty.gov>; Planning Dept <[redacted]flaglercounty.gov>
> Subject: Re: Zoning meeting July 8 - Agenda
>
> Will the Agenda and Backup for next Tuesday's meeting be posted today? I don't yet see it on your website.
> Thanks, Jackie O'Connell
> 336.512.9671 mobile
> Excuse brevity and typos, sent from mobile device
>
>> On Jun 3, 2025, at 10:07 AM, Hannah Lademann <[redacted]flaglercounty.gov> wrote:
>>
>> Good morning,
>>
>> Yes, Mr. Royer did submit a new variance application for 3 Pelican Lane. You can find it using AR #5689 on our online portal. He is set to be on the June 18th Technical Review Committee agenda and then should subsequently fall on the July 8th Planning and Development Board agenda. Let me know if you have any other questions.
>>
>>
>> Hannah Lademann
>> Planner
>> E: [redacted]flaglercounty.gov | V: 386-313-4069 | W: www.flaglercounty.gov

>>
>> Flagler County Board of County Commissioners
>>
>> Bunnell, FL 32110
>>
>> The mission of Flagler County is to provide high-quality services through a responsive workforce committed to excellence, integrity, in collaboration with the cities and to act as a fiscally responsible steward.
>>
>> -----Original Message-----
>> From: Jackie OConnell <[redacted]yahoo.com>
>> Sent: Tuesday, June 3, 2025 10:02 AM
>> To: Planning Dept <[redacted]flaglercounty.gov>
>> Subject: Zoning variance
>>
>> Hello,
>> Would you confirm whether a new request has been submitted for
>> 3 Pelican Lane, Flagler Beach.
>>
>> If so, please provide the online (guest) access code for the request.
>>
>> Will it be presented at July meeting?
>> Thank you,
>> Jackie O'C
>>
>> Please excuse typos! Sent from my iPhone
>

Adam Mengel, AICP, LEED AP BD+C

From: rental POC, Nan <[redacted]gmail.com>
Sent: Monday, July 7, 2025 9:52 AM
To: Planning Dept
Subject: Scanned Document 6
Attachments: Scanned Document 6.pdf

Nancye walls comments on 3 Pelican Lane, Project 2025050042-AR 5689

Adam Mengel, AICP, LEED AP BD+C

From: Adam Mengel, AICP, LEED AP BD+C
Sent: Monday, July 7, 2025 10:09 AM
To: Adam Mengel, AICP, LEED AP BD+C
Subject: FW: Scanned Document 6 (Planning and Development Board public comment on Item No. 8)
Attachments: Scanned Document 6.pdf

Importance: High

Hello Planning and Development Board members:

Please see below and attached regarding public comment received after publication of the Planning and Development Board meeting agenda. This comment is related to Item No. 8, Mr. Royer's resubmitted variance application at 3 Pelican Lane (Project No. 2025050043/AR No. 5689).

Please contact us with any questions.

Thank you,

Adam

Adam Mengel, AICP, LEED AP BD+C
Growth Management Director

E: [redacted]flaglercounty.gov | V: 386-313-4065 | W: www.flaglercounty.gov

Flagler County Board of County Commissioners
1769 E. Moody Blvd., Bldg 2
Bunnell, FL 32110

The mission of Flagler County is to provide high-quality services through a responsive workforce committed to excellence, integrity, in collaboration with the cities and to act as a fiscally responsible steward.

From: rental POC, Nan <[redacted]gmail.com>
Sent: Monday, July 7, 2025 9:52 AM
To: Planning Dept <[redacted]flaglercounty.gov>
Subject: Scanned Document 6

Nancye walls comments on 3 Pelican Lane, Project 2025050042-AR 5689

Comments Regarding 3 Pelican Lane Project No. 2025050042- AR5689-
Variance in the Residential Limited Commercial District

Good Morning,

My name is Nancye Walls. I am the owner of 7 Pelican Lane which is on the west side of Mockingbird Lane directly across from 3 Pelican Lane.
I do not agree to approve any variance beyond accommodating the house footprint that existed when Mr. Royner purchased 3 Pelican Lane in 2017.

The variance request is to build pool pump house and fence that would extend almost to his west side property line adjacent to the 50 foot wide road – Mockingbird. There are 6 residences and vacant lots on Mockingbird. Building this close to the road will prevent parallel parking for cars, RVs, boats that are used by residence and/or come in the neighborhood with friends and family. Also space is needed for the routine Amazon truck, other delivery and Emergency vehicles. Additionally the height of the pool house is a safety issue that can block the view of children and adult pedestrians and vehicles and the structure on planned location would be an eye-sore.

As background:
There are 20 Plus lots in this River-Beach development started in 1960s. There are 3 roads in the development – Pelican, Mockingbird and Cardinal Lanes – each is a 50 foot wide parcel of land. Some portion of each road is a combination of gravel, sand and grass. The gravel passageway is a single lane section within the road so it may appear that parking is available on the grass and sand, but technically vehicles should not park on the road. Each home owner should have an easement on their property wide enough for extra and visitors parking and for rainwater drainage. Dealing with rain water is a growing concern that will increase when the 3-4 vacant lots along Mockingbird are developed.
Mr. Royner has a large house (3,500 sqare feet including driveway and porches) but his lot is only 7,500 square feet. The east side and front of his property may be an option or the rear section or some portion of his house which has a permanent roof may be repurposed for his endless lap pool and pumping equipment.

Respectfully,

NANCYE WALLS, 571-426-2867

Adam Mengel, AICP, LEED AP BD+C

From: Simone Kenny, AICP
Sent: Tuesday, July 8, 2025 3:15 PM
To: Simone Kenny, AICP
Cc: Adam Mengel, AICP, LEED AP BD+C; Hannah Lademann; Chuck Merenda
Subject: FW: Scanned Document 6 (Planning and Development Board public comment on Item No. 8)
Attachments: Public Comment (AR 5689).pdf

Importance: High

Hello Planning and Development Board members,

Please see the attached document for another public comment regarding Item No. 8, Mr. Royer's resubmitted variance application at 3 Pelican Lane (Project No. 2025050043/AR No. 5689).

Please contact us with any questions,
Simone

Simone Kenny, AICP
Senior Planner

E: [redacted]flaglercounty.gov | V: 386-313-4067 | W: www.flaglercounty.gov

Flagler County Board of County Commissioners

Bunnell, FL 32110

The mission of Flagler County is to provide high-quality services through a responsive workforce committed to excellence, integrity, in collaboration with the cities and to act as a fiscally responsible steward.

From: Adam Mengel, AICP, LEED AP BD+C <[redacted]flaglercounty.gov>
Sent: Monday, July 7, 2025 10:09 AM
To: Adam Mengel, AICP, LEED AP BD+C <[redacted]flaglercounty.gov>
Subject: FW: Scanned Document 6 (Planning and Development Board public comment on Item No. 8)
Importance: High

Hello Planning and Development Board members:

Please see below and attached regarding public comment received after publication of the Planning and Development Board meeting agenda. This comment is related to Item No. 8, Mr. Royer's resubmitted variance application at 3 Pelican Lane (Project No. 2025050043/AR No. 5689).

Please contact us with any questions.

Thank you,

Adam

Adam Mengel, AICP, LEED AP BD+C
Growth Management Director

E: [redacted]flaglercounty.gov | V: 386-313-4065 | W: www.flaglercounty.gov

Flagler County Board of County Commissioners
1769 E. Moody Blvd., Bldg 2
Bunnell, FL 32110

The mission of Flagler County is to provide high-quality services through a responsive workforce committed to excellence, integrity, in collaboration with the cities and to act as a fiscally responsible steward.

From: rental POC, Nan <[redacted]gmail.com>
Sent: Monday, July 7, 2025 9:52 AM
To: Planning Dept <[redacted]flaglercounty.gov>
Subject: Scanned Document 6

Nancye walls comments on 3 Pelican Lane, Project 2025050042-AR 5689

July 8, 2025

Flagler County Planning and Development Board
1769 E. Moody Blvd., Bldg 2
Bunnell, FL 32110

RE: Project No. 2025050042 – AR 5689 – Variance in the R/C (Residential Limited Commercial) District

Dear sirs:

I am opposed to the requested variance for the following reasons:

1. I own two properties at the end of Pelican Lane. Pelican Lane slopes from route A1A down to the intracoastal waterway and all the stormwater runoff ends up in both of my yards every time we have a heavy rain.

2. The lots in the subdivision are all small under 10,000 ft.^{2}.

3. Granting a variance for a large shed roof will add to the water runoff and more accumulation on my property, which I don't need.

4. By approving this variance you will be setting a precedent for this type of request.

5. See 3 photos.

   a. Pelican Lane looking up to A1A.
   b. Sand and stone that washes down after storms.
   c. Flooded yard.

Sincerely,

George E. Benoit

Adam Mengel, AICP, LEED AP BD+C

From: Adam Mengel, AICP, LEED AP BD+C
Sent: Friday, July 18, 2025 4:20 PM
To: Jackie OConnell
Cc: PublicRecords; Simone Kenny, AICP
Subject: Variances within River Beach subdivision

Hi Ms. O'Connell:

I checked Department records for variances within River Beach using the following search terms:

- "23-11-31-5300"
- "Cardinal"
- "Mockingbird"
- "Pelican"
- "River Beach"

No files were found other than the variance files associated with Mr. Royer's request at 3 Pelican Lane.

Please contact me with any questions.

Thank you,

Adam

Adam Mengel, AICP, LEED AP BD+C
Growth Management Director

E: [redacted]flaglercounty.gov | V: 386-313-4065 | W: www.flaglercounty.gov

Flagler County Board of County Commissioners
1769 E. Moody Blvd., Bldg 2
Bunnell, FL 32110

The mission of Flagler County is to provide high-quality services through a responsive workforce committed to excellence, integrity, in collaboration with the cities and to act as a fiscally responsible steward.

Adam Mengel, AICP, LEED AP BD+C

From: Jackie OConnell <[redacted]yahoo.com>
Sent: Sunday, July 20, 2025 5:46 PM
To: Adam Mengel, AICP, LEED AP BD+C
Cc: PublicRecords; Simone Kenny, AICP
Subject: Re: Variances within River Beach subdivision

Follow Up Flag: Follow up
Flag Status: Flagged

Thanks to you and Simone for the assistance on Friday. At the next meeting, I plan to say/write "As confirmed in a recent search of public records, no other variances have been sought, nor granted, in our subdivision."
Let me know of any objection.

Jackie O'Connell
336.512.9671 mobile
Excuse brevity and typos, sent from mobile device

On Jul 18, 2025, at 4:20 PM, Adam Mengel, AICP, LEED AP BD+C <[redacted]flaglercounty.gov> wrote:

Hi Ms. O'Connell:

I checked Department records for variances within River Beach using the following search terms:

1. "23-11-31-5300"
2. "Cardinal"
3. "Mockingbird"
4. "Pelican"
5. "River Beach"

No files were found other than the variance files associated with Mr. Royer's request at 3 Pelican Lane.

Please contact me with any questions.

Thank you,

Adam

Adam Mengel, AICP, LEED AP BD+C
Growth Management Director

E: [redacted]flaglercounty.gov | V: 386-313-4065 | W: www.flaglercounty.gov

Flagler County Board of County Commissioners
1769 E. Moody Blvd., Bldg 2
Bunnell, FL 32110

The mission of Flagler County is to provide high-quality services through a responsive workforce committed to excellence, integrity, in collaboration with the cities and to act as a fiscally responsible steward.

Adam Mengel, AICP, LEED AP BD+C

From: Jackie O'Connell <[redacted]yahoo.com>
Sent: Friday, August 8, 2025 8:51 AM
To: Simone Kenny, AICP; Planning Dept
Subject: 3 Pelican Lane - Badu Stream II info
Attachments: Badu Stream plumbing photo.pdf; Installation-Manual-BaduStream-II description.pdf

Good morning Simone,
I did a quick google search of the Badu pumps which Mr. Royer says he will install. Here is the link to the full Installation guide. I've attached two excerpts which would be helpful to send to the Board in their package.
Thank you, Jackie

From Badu site

https://www.badujet.com/wp-content/uploads/2021/03/Installation-Manual-BaduStream-II.pdf

Jackie O'Connell

Plumbing installation for the BaduStream ***Package D (system include three jet housings & two pumps)***

NOTE: ***(Three Jet Installation)*** *Increase the pipe size to 6" when jets are more than 30 ft. from the pump. Use 6" x 4" bushings after 4" manifold tees.*

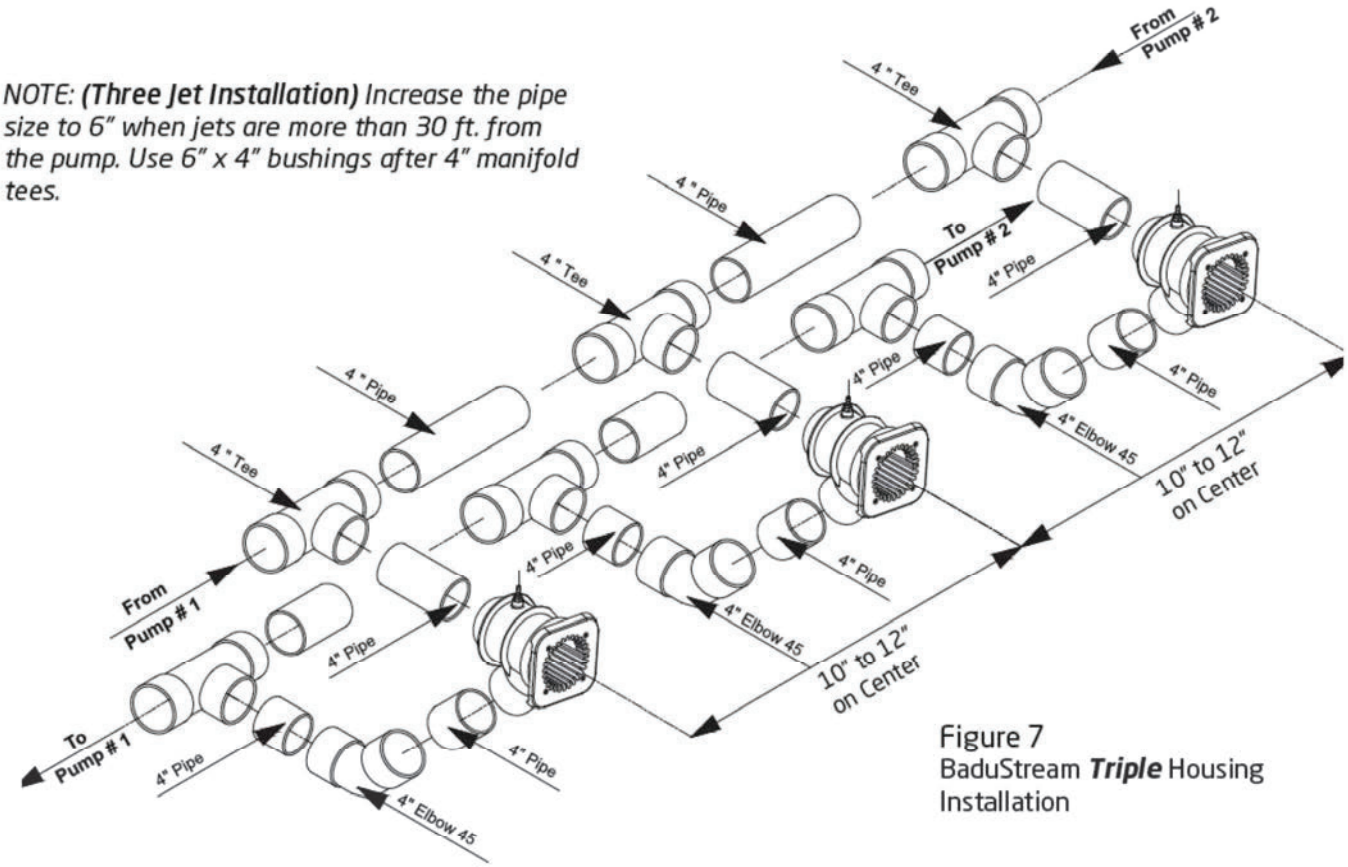

Figure 7
BaduStream ***Triple*** Housing Installation

IMPORTANT NOTE: ***CHECK VALVES <u>MUST BE</u>*** *used on the discharge side of each pump. Minimum 4" pipe between pump and BaduStream plumbing manifold.*





Figure 8
Check Valves Installed

2 General Description

Badu®Stream *II*

The Badu SwimJet Systems from Speck Pumps are designed to be installed during the construction of your pool to create a water treadmill for anyone wanting a therapeutic and effective exercise.

The Badu SwimJet Systems can be installed in any type of pool, large or small, from gunite to vinyl liner. It has no protruding parts ensuring pool user's safety, is very compact and installs at minimal cost. The self-contained, flush-mounted unit is a jet-propulsion system that pumps water into the pool creating a current in excess of 5,700 gallons per minute from a single recessed jet housing.

Topping off the experience is the pulsating massage hose which can be attached to the jet nozzles for easy and convenient massage treatments for joints and muscles. *(NOTE: The massage hose is sold separately.)*

3 Installation Information

Receiving Information

1. Upon receipt of the swimjet system, check the cartons for damage. Open each carton and check the pump(s), jet housing(s), and control box for concealed damage, such as cracks, dents, or a bent base. If damage is found, contact the shipper or distributor where the swimjet was purchased.

2. Inspect the contents of each carton and verify that all parts are included. *(See Image 1)*

A. Flush-mount jet housing

B. Square, anti-entrapment cover (8¼" x 8¼") undetectable pump suction. *(Optional Round Cover available)*

C. Adjustable water flow jet nozzle

D. Air regulator adjusts amount of air bubbles in water flow.

E. Control box complete with GFCI and WiFi control module.

F. SPECK Model 21-80/33GS 4.0 HP (or a SPECK Model 72-VI 3.5 HP) self-priming, single phase plastic pump with built-in thermal overload *(no motor starter required)*. Optional three phase pump and control box available. (*NOTE: Flooded suction pump available for installation below water level.)*

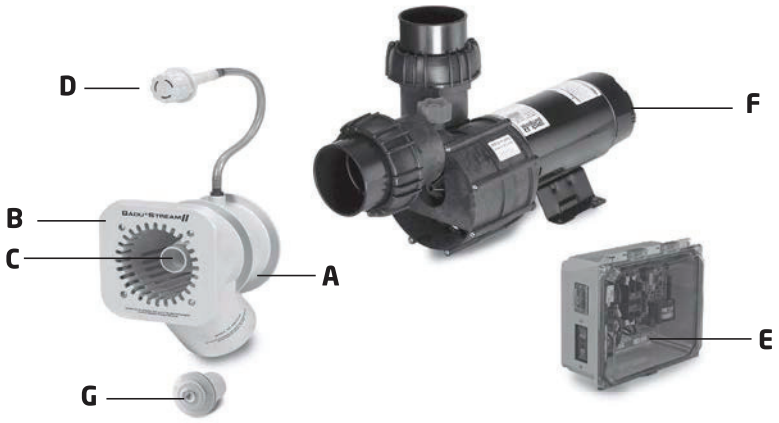

Image 1
BaduStream II System (1 jet & 4 HP pump)

G. System (ON/OFF) LED Touch Button - Complete with 1.5" threaded housing fits into any 1.5" return fitting. The Touch button turns the swimjet system ON/OFF. Waterproof button may be installed below water level.

Adam Mengel, AICP, LEED AP BD+C

From: Jackie OConnell <[redacted]yahoo.com>
Sent: Sunday, August 10, 2025 3:58 PM
To: Planning Dept; Sean S. Moylan
Subject: July Minutes - 3 Pelican

I noticed that there is no mention of the two Public Comments sent via email, from Ms Walls and Mr Benoit, in opposition to the Pelican variance request. Would you please update the minutes to reference this opposition before the Board approves.
Thank you,
Jackie O'Connell

Excuse brevity and typos, sent from mobile device

Adam Mengel, AICP, LEED AP BD+C

From: Sean S. Moylan
Sent: Monday, August 11, 2025 7:59 AM
To: Adam Mengel, AICP, LEED AP BD+C; Simone Kenny, AICP; Hannah Lademann; Sarah Spector
Subject: Fw: July Minutes - 3 Pelican

The written comments are part of the record but don't have to be mentioned or spread on the mins. I suggest treating these written cmts just as have historically treated any other.

Get Outlook for iOS

From: Jackie OConnell <[redacted]yahoo.com>
Sent: Sunday, August 10, 2025 3:57:32 PM
To: Planning Dept <[redacted]flaglercounty.gov>; Sean S. Moylan <[redacted]flaglercounty.gov>
Subject: July Minutes - 3 Pelican

I noticed that there is no mention of the two Public Comments sent via email, from Ms Walls and Mr Benoit, in opposition to the Pelican variance request. Would you please update the minutes to reference this opposition before the Board approves.
Thank you,
Jackie O'Connell

Excuse brevity and typos, sent from mobile device

Adam Mengel, AICP, LEED AP BD+C

From: Simone Kenny, AICP
Sent: Monday, August 11, 2025 8:08 AM
To: Jackie OConnell; Planning Dept; Sean S. Moylan
Subject: RE: July Minutes - 3 Pelican

Hello Jackie,

The meeting minutes reflect discussion and actions taken during the meeting. Public Comments are included in the record of each item which are published as part of the backup. They are not included in the minutes.

Thank you,
Simone

Simone Kenny, AICP
Senior Planner
E: [redacted]flaglercounty.gov | V: 386-313-4067 | W: www.flaglercounty.gov

Flagler County Board of County Commissioners

Bunnell, FL 32110

The mission of Flagler County is to provide high-quality services through a responsive workforce committed to excellence, integrity, in collaboration with the cities and to act as a fiscally responsible steward.

-----Original Message-----
From: Jackie OConnell <[redacted]yahoo.com>
Sent: Sunday, August 10, 2025 3:58 PM
To: Planning Dept <[redacted]flaglercounty.gov>; Sean S. Moylan <[redacted]flaglercounty.gov>
Subject: July Minutes - 3 Pelican

I noticed that there is no mention of the two Public Comments sent via email, from Ms Walls and Mr Benoit, in opposition to the Pelican variance request. Would you please update the minutes to reference this opposition before the Board approves.
Thank you,
Jackie O'Connell

Excuse brevity and typos, sent from mobile device

Adam Mengel, AICP, LEED AP BD+C

From: Jackie OConnell <[redacted]yahoo.com>
Sent: Monday, August 11, 2025 9:46 AM
To: Simone Kenny, AICP
Cc: Planning Dept; Sean S. Moylan
Subject: Re: July Minutes - 3 Pelican

Thanks for your quick response. Let me clarify…I'm not suggesting the actual emailed comments be included in the minutes. I'm requesting that the minutes reflect there were (the existence of) two (emailed) opposing "public comments" received and shared with the Board. If a reference isn't part of the official record of the meeting, no one will know there was additional opposition.

When Mr Royer recently appealed to County Commission, a similar omission was in the Planning Board's February minutes. Mr. Mengel had to verbally state to the Commission there was additional opposition, not referenced in the Planning minutes. Subsequently, the Planning Board minutes for February were amended to reference the emailed opposition.

Shouldn't a similar reference, noting that two opposing emailed comments were received, be included in the July minutes for the Planning Board?

336.512.9671 mobile
Excuse brevity and typos, sent from mobile device

> On Aug 11, 2025, at 8:08 AM, Simone Kenny, AICP <[redacted]flaglercounty.gov> wrote:
>
> Hello Jackie,
>
> The meeting minutes reflect discussion and actions taken during the meeting. Public Comments are included in the record of each item which are published as part of the backup. They are not included in the minutes.
>
> Thank you,
> Simone
>
>
>
>
> Simone Kenny, AICP
> Senior Planner
> E: [redacted]flaglercounty.gov | V: 386-313-4067 | W: www.flaglercounty.gov
>
> Flagler County Board of County Commissioners
>
> Bunnell, FL 32110
>
> The mission of Flagler County is to provide high-quality services through a responsive workforce committed to excellence, integrity, in collaboration with the cities and to act as a fiscally responsible steward.
>
> -----Original Message-----

> From: Jackie OConnell <[redacted]yahoo.com>
> Sent: Sunday, August 10, 2025 3:58 PM
> To: Planning Dept <[redacted]flaglercounty.gov>; Sean S. Moylan <[redacted]flaglercounty.gov>
> Subject: July Minutes - 3 Pelican
>
> I noticed that there is no mention of the two Public Comments sent via email, from Ms Walls and Mr Benoit, in opposition to the Pelican variance request. Would you please update the minutes to reference this opposition before the Board approves.
> Thank you,
> Jackie O'Connell
>
> Excuse brevity and typos, sent from mobile device

Adam Mengel, AICP, LEED AP BD+C

From: Adam Mengel, AICP, LEED AP BD+C
Sent: Tuesday, August 12, 2025 2:18 PM
To: Adam Mengel, AICP, LEED AP BD+C
Cc: Chuck Merenda; Simone Kenny, AICP
Subject: FW: Objection to Variance Request
Attachments: 3 Pelican Ray - GEB ltr to County.pdf

Importance: High

Planning and Development Board members:

Please see below and attached regarding Agenda Item No. 5.

Please contact us with any questions.

Thank you,

Adam

From: George Benoit <[redacted]icloud.com>
Sent: Tuesday, August 12, 2025 2:01 PM
To: Simone Kenny, AICP <[redacted]flaglercounty.gov>
Cc: O'Connell Daniel & Jacqueline <[redacted]yahoo.com>
Subject: Objection to Variance Request

Flagler County Zoning and Planning Department,

Re: Project No. 2025050043
Please include my objection to the requested variance that I had sent in for a previous hearing.

George E Benoit
17 Pelican Ln.

George

July 8, 2025

Flagler County Planning and Development Board
1769 E. Moody Blvd., Bldg 2
Bunnell, FL 32110

RE: Project No. 2025050042 – AR 5689 – Variance in the R/C (Residential Limited Commercial) District

Dear sirs:

I am opposed to the requested variance for the following reasons:

1. I own two properties at the end of Pelican Lane. Pelican Lane slopes from route A1A down to the intracoastal waterway and all the stormwater runoff ends up in both of my yards every time we have a heavy rain.

2. The lots in the subdivision are all small under 10,000 ft.^{2}.

3. Granting a variance for a large shed roof will add to the water runoff and more accumulation on my property, which I don't need.

4. By approving this variance you will be setting a precedent for this type of request.

5. See 3 photos.

   a. Pelican Lane looking up to A1A.
   b. Sand and stone that washes down after storms.
   c. Flooded yard.

Sincerely,

George E. Benoit





Adam Mengel, AICP, LEED AP BD+C

From: Jackie OConnell <[redacted]yahoo.com>
Sent: Monday, August 18, 2025 4:16 PM
To: Planning Dept
Subject: Fwd: 3 Pelican - meeting tomorrow - Tuesday morning

Wanted to give a heads up that we will come to your office tomorrow (Tuesday) between 10-noon to discuss questions regarding R/C zoning requirements, procedures for PDB meetings, and appeals to BOCC.
If the appropriate staff won't be available during that time frame, we can shift to 1-3p. Pls advise by 8:30am if the afternoon works better.
Thank you,
Jackie O'Connell

336.512.9671 mobile
Excuse brevity and typos, sent from mobile device

Begin forwarded message:

> **From:** Jackie OConnell <[redacted]yahoo.com>
> **Date:** August 13, 2025 at 11:19:28 AM EDT
> **To:** Simone Kenny AICP <[redacted]flaglercounty.gov>
> **Subject: 3 Pelican**
>
> Hi Simone,
> Would you be available to meet w Dan and me to answer a couple of questions regarding the zoning code/requirements? Probably 30 minutes[redacted] your office.
>
> How does your schedule look for Monday 8/18, anytime, or this Friday 8/15, 11am-5pm. If either will work, you pick the time.
> Thank you,
> Jackie O'Connell
>
> 336.512.9671 mobile
> Excuse brevity and typos, sent from mobile device

Adam Mengel, AICP, LEED AP BD+C

From: Jackie OConnell <[redacted]yahoo.com>
Sent: Monday, August 18, 2025 8:14 PM
To: Simone Kenny, AICP
Cc: Planning Dept
Subject: Re: 3 Pelican - meeting tomorrow - Tuesday morning

Will do, thx
Please excuse typos! Sent from my iPhone

On Aug 18, 2025, at 4:25 PM, Simone Kenny, AICP <[redacted]flaglercounty.gov> wrote:

Hello,

Apologies for missing your earlier email. We have a meeting from 11 am to 12pm and I will be out of the office for meeting after 2pm. To make sure we have enough time to answer your questions, I'd recommend coming a little before 10.

Thank you,
Simone

Simone Kenny, AICP
Senior Planner

E: [redacted]flaglercounty.gov | V: 386-313-4067 | W: www.flaglercounty.gov

Flagler County Board of County Commissioners

Bunnell, FL 32110

<image002.png>

<image001.png> <image003.png>

<image004.png>

<image005.png>

From: Jackie OConnell <[redacted]yahoo.com>
Sent: Monday, August 18, 2025 4:16 PM
To: Planning Dept <[redacted]flaglercounty.gov>
Subject: Fwd: 3 Pelican - meeting tomorrow - Tuesday morning

Wanted to give a heads up that we will come to your office tomorrow (Tuesday) between 10-noon to discuss questions regarding R/C zoning requirements, procedures for PDB meetings, and appeals to BOCC.
If the appropriate staff won't be available during that time frame, we can shift to 1-3p. Pls advise by 8:30am if the afternoon works better.
Thank you,
Jackie O'Connell

336.512.9671 mobile
Excuse brevity and typos, sent from mobile device

Begin forwarded message:

> **From:** Jackie OConnell <[redacted]yahoo.com>
> **Date:** August 13, 2025 at 11:19:28 AM EDT
> **To:** Simone Kenny AICP <[redacted]flaglercounty.gov>
> **Subject: 3 Pelican**
>
> Hi Simone,
> Would you be available to meet w Dan and me to answer a couple of questions regarding the zoning code/requirements? Probably 30 minutes [redacted] your office.
>
> How does your schedule look for Monday 8/18, anytime, or this Friday 8/15, 11am-5pm. If either will work, you pick the time.
> Thank you,
> Jackie O'Connell
>
> 336.512.9671 mobile
> Excuse brevity and typos, sent from mobile device

Adam Mengel, AICP, LEED AP BD+C

From: Jackie OConnell <[redacted]yahoo.com>
Sent: Tuesday, August 19, 2025 3:43 PM
To: Sarah Spector
Cc: Adam Mengel, AICP, LEED AP BD+C; Sean S. Moylan
Subject: Re: follow up Board/Commission meetings

Hello Ms. Spector,

Your email came in while my husband and I were meeting w Ms. Kenny and Lademann. They have probably shared w you a bit more color around our inquiries.

Regarding a tie vote. As you confirmed, the LDC states that in case of quorum and tie-vote, the item fails. This was the situation at the Aug 12 meeting. There was a motion and vote to approve, resulting in a tie, and thus the decision of the Board was that the variance did not pass. The Acting Chair and another Board member stated it was appropriate to move to the next agenda item. The Board vote was not rescinded. Only after the "inquiry/guidance" from Staff did the invalid discussions, motion and vote to continue ensue.

Regarding continuance. The LDC states that only one continuance may be allowed. If your position is that more continuances may be granted in cases of tie vote, then an infinite number of continuances could be needed/granted; this is not documented in Code, nor is it reasonable. In the PDB meeting, Staff stated that there is a maximum of two ("just two") continuances allowed. Which code section (or precedence) states any circumstances that allows for more than one continuance?

Given the importance of timing in "decisions", we request these procedural errors be addressed as soon as possible, certainly within a week. Should the invalid continuance be perpetuated at Sept meeting, there is compounding of a procedural error, not to mention bias in favor of Applicant.

Jackie O'Connell

336.512.9671 mobile
Excuse brevity and typos, sent from mobile device

On Aug 19, 2025, at 10:26 AM, Sarah Spector <[redacted]flaglercounty.gov> wrote:

Good morning, Ms. O'Connell-

As to your first question, Section 2.02.03(5) of the Land Development Code provides that each decision of the planning and development board must be approved by a majority vote of the members present at a meeting in which a quorum is in attendance and voting. In the absence of a majority vote, the item fails.

As to the second question, Section 3.07.03(B)(3) of the Land Development Code allows for one continuance due to lack of necessary info ("If the planning board determines that sufficient factual data was not presented, the planning board may continue the hearing until the next scheduled meeting to allow for the preparation of such factual data. Only one (1) such continuation shall be allowed for each requested variance and/or special exception."). However, there is nothing in the Code that prohibits an additional continuance for other reasons like, here, where the Board had an even number of members and wanted to wait to vote again when there would possibly be an odd number in attendance.

Sarah Spector
Assistant County Attorney

E: [redacted]flaglercounty.gov | V: 386-313-4058 | W: www.flaglercounty.gov

Flagler County Board of County Commissioners
1769 E. Moody Blvd., Bldg 2
Bunnell, FL 32110

The mission of Flagler County is to provide high-quality services through a responsive workforce committed to excellence, integrity, in collaboration with the cities and to act as a fiscally responsible steward.

-----Original Message-----
From: Jackie OConnell <[redacted]yahoo.com>
Sent: Monday, August 18, 2025 9:50 AM
To: Sean S. Moylan <[redacted]flaglercounty.gov>
Subject: Re: follow up Board/Commission meetings

Thank you. In regard to the two other open items:

1) Would you provide the LDC Code (or relevant procedural code) section which addresses a Planning and Development Board "tie vote" and resulting decision.
2) Would you provide the Code reference(s) which indicates the situation(s)when the PDB may grant a second continuance for a variance request in an R/C district. (The only related section I identified is FC 3.07.03.B.3.)

Jackie O'Connell

336.512.9671 mobile
Excuse brevity and typos, sent from mobile device

> On Aug 18, 2025, at 8:07 AM, Sean S. Moylan <[redacted]flaglercounty.gov> wrote:
> Good morning,
> I verified your comments/emails were not made part of the record on appeal. I instructed staff that the entire record must be presented to the BCC on appeals.
>
>
> Sean S. Moylan
> Deputy County Attorney

> Board Certified City, County, and Local Government Law
> E: [redacted]flaglercounty.gov | V: 386-313-4056
>
> Flagler County Board of County Commissioners
> 1769 E. Moody Blvd., Bldg 2
> Bunnell, FL 32110
>
>
> -----Original Message-----
> From: Jackie OConnell <[redacted]yahoo.com>
> Sent: Sunday, August 17, 2025 2:02 PM
> To: Sean S. Moylan <[redacted]flaglercounty.gov>
> Subject: follow up Board/Commission meetings
>
> Hello Mr. Moylan,
> I appreciate the time you took to talk with me last Wednesday. There were a couple of items, relating to meetings on May 5 and Aug 12, that you were going to verify or research. Would you be able to provide an update (call or email) sometime on Monday, 8/18?
> Thanks,
> Jackie O'Connell
>
> 336.512.9671 mobile
> Excuse brevity and typos, sent from mobile device

Adam Mengel, AICP, LEED AP BD+C

From: Jackie OConnell <[redacted]yahoo.com>
Sent: Tuesday, August 26, 2025 12:23 PM
To: Sarah Spector
Cc: Adam Mengel, AICP, LEED AP BD+C; Sean S. Moylan
Subject: Re: follow up Board/Commission meetings

Thank you for the update. Is Mr. Royer aware that procedural questions were raised by me (using my name) or was a generic reason given (public inquiry, staff question, etc)? Also would you provide the portal access # for his new application?
Jackie
Please excuse typos! Sent from my iPhone

On Aug 26, 2025, at 9:50 AM, Sarah Spector <[redacted]flaglercounty.gov> wrote:

Good morning, Ms. O'Connell-

I apologize for the delay in responding to you. We were addressing your comments and concerns internally last week and can now report to you that Mr. Royer has submitted a new application. Thus, while we do not necessarily agree with the conclusions that you have drawn below, the procedural issues raised will no longer cloud the underlying issue of whether the variance criteria have been met.

The first stop for the new application will be the Technical Review Committee on September 17, 2025. From there it will be scheduled for hearing by the Planning and Development Board, likely in October but this will be decided at the TRC meeting.

Should you have any questions regarding the foregoing, please do not hesitate to reach out.

Sarah Spector
Assistant County Attorney

E: [redacted]flaglercounty.gov | V: 386-313-4058 | W: www.flaglercounty.gov

Flagler County Board of County Commissioners
1769 E. Moody Blvd., Bldg 2
Bunnell, FL 32110








The mission of Flagler County is to provide high-quality services through a responsive workforce committed to excellence, integrity, in collaboration with the cities and to act as a fiscally responsible steward.

From: Jackie OConnell <[redacted]yahoo.com>
Sent: Tuesday, August 19, 2025 3:43 PM
To: Sarah Spector <[redacted]flaglercounty.gov>
Cc: Adam Mengel, AICP, LEED AP BD+C <[redacted]flaglercounty.gov>; Sean S. Moylan <[redacted]flaglercounty.gov>
Subject: Re: follow up Board/Commission meetings

Hello Ms. Spector,

Your email came in while my husband and I were meeting w Ms. Kenny and Lademann. They have probably shared w you a bit more color around our inquiries.

Regarding a tie vote. As you confirmed, the LDC states that in case of quorum and tie-vote, the item fails. This was the situation at the Aug 12 meeting. There was a motion and vote to approve, resulting in a tie, and thus the decision of the Board was that the variance did not pass. The Acting Chair and another Board member stated it was appropriate to move to the next agenda item. The Board vote was not rescinded. Only after the "inquiry/guidance" from Staff did the invalid discussions, motion and vote to continue ensue.

Regarding continuance. The LDC states that only one continuance may be allowed. If your position is that more continuances may be granted in cases of tie vote, then an infinite number of continuances could be needed/granted; this is not documented in Code, nor is it reasonable. In the PDB meeting, Staff stated that there is a maximum of two ("just two") continuances allowed. Which code section (or precedence) states any circumstances that allows for more than one continuance?

Given the importance of timing in "decisions", we request these procedural errors be addressed as soon as possible, certainly within a week. Should the invalid continuance be perpetuated at Sept meeting, there is compounding of a procedural error, not to mention bias in favor of Applicant.

Jackie O'Connell

336.512.9671 mobile
Excuse brevity and typos, sent from mobile device

> On Aug 19, 2025, at 10:26 AM, Sarah Spector <[redacted]flaglercounty.gov> wrote:

Good morning, Ms. O'Connell-

As to your first question, Section 2.02.03(5) of the Land Development Code provides that each decision of the planning and development board must be approved by a majority vote of the members present at a meeting in which a quorum is in attendance and voting. In the absence of a majority vote, the item fails.

As to the second question, Section 3.07.03(B)(3) of the Land Development Code allows for one continuance due to lack of necessary info ("If the planning board determines that sufficient factual data was not presented, the planning board may continue the hearing until the next scheduled meeting to allow for the preparation of such factual data. Only one (1) such continuation shall be allowed for each requested variance and/or special exception."). However, there is nothing in the Code that prohibits an additional continuance for other reasons like, here, where the Board had an even number of members and wanted to wait to vote again when there would possibly be an odd number in attendance.

Sarah Spector
Assistant County Attorney

E: [redacted]flaglercounty.gov | V: 386-313-4058 | W: www.flaglercounty.gov

Flagler County Board of County Commissioners
1769 E. Moody Blvd., Bldg 2
Bunnell, FL 32110

<image002.png>

<image001.png> <image003.png>

<image004.png>

<image005.png>

The mission of Flagler County is to provide high-quality services through a responsive workforce committed to excellence, integrity, in collaboration with the cities and to act as a fiscally responsible steward.

-----Original Message-----
From: Jackie OConnell <[redacted]yahoo.com>
Sent: Monday, August 18, 2025 9:50 AM
To: Sean S. Moylan <[redacted]flaglercounty.gov>
Subject: Re: follow up Board/Commission meetings

Thank you. In regard to the two other open items:

1) Would you provide the LDC Code (or relevant procedural code) section which addresses a Planning and Development Board "tie vote" and resulting decision.
2) Would you provide the Code reference(s) which indicates the situation(s)when the PDB may grant a second continuance for a variance request in an R/C district. (The only related section I identified is FC 3.07.03.B.3.)

Jackie O'Connell

336.512.9671 mobile
Excuse brevity and typos, sent from mobile device

> On Aug 18, 2025, at 8:07 AM, Sean S. Moylan <[redacted]flaglercounty.gov> wrote:
> Good morning,
> I verified your comments/emails were not made part of the record on appeal. I instructed staff that the entire record must be presented to the BCC on appeals.
>
>
> Sean S. Moylan
> Deputy County Attorney
> Board Certified City, County, and Local Government Law
> E: [redacted]flaglercounty.gov | V: 386-313-4056
>
> Flagler County Board of County Commissioners
> 1769 E. Moody Blvd., Bldg 2
> Bunnell, FL 32110
>
>
> -----Original Message-----
> From: Jackie OConnell <[redacted]yahoo.com>
> Sent: Sunday, August 17, 2025 2:02 PM
> To: Sean S. Moylan <[redacted]flaglercounty.gov>
> Subject: follow up Board/Commission meetings
>
> Hello Mr. Moylan,
> I appreciate the time you took to talk with me last Wednesday. There were a couple of items, relating to meetings on May 5 and Aug 12, that you were going to verify or research. Would you be able to provide an update (call or email) sometime on Monday, 8/18?
> Thanks,
> Jackie O'Connell
>
> 336.512.9671 mobile
> Excuse brevity and typos, sent from mobile device

Adam Mengel, AICP, LEED AP BD+C

From: Jackie OConnell <[redacted]yahoo.com>
Sent: Wednesday, August 27, 2025 8:04 AM
To: Sarah Spector
Cc: Adam Mengel, AICP, LEED AP BD+C; Sean S. Moylan
Subject: Re: follow up Board/Commission meetings

Surely there could have been a more objective way, without my name or inference, to address this w Mr Royer and, if not too late, with PDB.

How was, or will, my inquiries be conveyed to the Chair/Vice, and rest of members?
What will August draft minutes reflect as outcome? A decision "rendered"?

Regarding the reapplication, which procedures (vote, # of continuances, etc.) will be followed?

Not being argumentative, I simply need to know to whom and how I've been identified and which rules apply.

Thank you, Jackie

336.512.9671 mobile
Excuse brevity and typos, sent from mobile device

On Aug 26, 2025, at 4:31 PM, Sarah Spector <[redacted]flaglercounty.gov> wrote:

The new AR # is 5921.

I cannot state with certainty whether you were referred to by name, but I do know that Mr. Royer was aware of the inquiry you made.

From: Jackie OConnell <[redacted]yahoo.com>
Sent: Tuesday, August 26, 2025 12:23 PM
To: Sarah Spector <[redacted]flaglercounty.gov>
Cc: Adam Mengel, AICP, LEED AP BD+C <[redacted]flaglercounty.gov>; Sean S. Moylan <[redacted]flaglercounty.gov>
Subject: Re: follow up Board/Commission meetings

Thank you for the update. Is Mr. Royer aware that procedural questions were raised by me (using my name) or was a generic reason given (public inquiry, staff question, etc)? Also would you provide the portal access # for his new application?
Jackie
Please excuse typos! Sent from my iPhone

On Aug 26, 2025, at 9:50 AM, Sarah Spector <[redacted]flaglercounty.gov> wrote:

Good morning, Ms. O'Connell-

I apologize for the delay in responding to you. We were addressing your comments and concerns internally last week and can now report to you that Mr. Royer has submitted a new application. Thus, while we do not necessarily agree with the conclusions that you have drawn below, the procedural issues raised will no longer cloud the underlying issue of whether the variance criteria have been met.

The first stop for the new application will be the Technical Review Committee on September 17, 2025. From there it will be scheduled for hearing by the Planning and Development Board, likely in October but this will be decided at the TRC meeting.

Should you have any questions regarding the foregoing, please do not hesitate to reach out.

Sarah Spector
Assistant County Attorney

E: [redacted]flaglercounty.gov | V: 386-313-4058 | W: www.flaglercounty.gov

Flagler County Board of County Commissioners
1769 E. Moody Blvd., Bldg 2
Bunnell, FL 32110







The mission of Flagler County is to provide high-quality services through a responsive workforce committed to excellence, integrity, in collaboration with the cities and to act as a fiscally responsible steward.

From: Jackie OConnell <[redacted]yahoo.com>
Sent: Tuesday, August 19, 2025 3:43 PM
To: Sarah Spector <[redacted]flaglercounty.gov>
Cc: Adam Mengel, AICP, LEED AP BD+C <[redacted]flaglercounty.gov>; Sean S. Moylan

<[redacted]flaglercounty.gov>
Subject: Re: follow up Board/Commission meetings

Hello Ms. Spector,

Your email came in while my husband and I were meeting w Ms. Kenny and Lademann. They have probably shared w you a bit more color around our inquiries.

Regarding a tie vote. As you confirmed, the LDC states that in case of quorum and tie-vote, the item fails. This was the situation at the Aug 12 meeting. There was a motion and vote to approve, resulting in a tie, and thus the decision of the Board was that the variance did not pass. The Acting Chair and another Board member stated it was appropriate to move to the next agenda item. The Board vote was not rescinded. Only after the "inquiry/guidance" from Staff did the invalid discussions, motion and vote to continue ensue.

Regarding continuance. The LDC states that only one continuance may be allowed. If your position is that more continuances may be granted in cases of tie vote, then an infinite number of continuances could be needed/granted; this is not documented in Code, nor is it reasonable. In the PDB meeting, Staff stated that there is a maximum of two ("just two") continuances allowed. Which code section (or precedence) states any circumstances that allows for more than one continuance?

Given the importance of timing in "decisions", we request these procedural errors be addressed as soon as possible, certainly within a week. Should the invalid continuance be perpetuated at Sept meeting, there is compounding of a procedural error, not to mention bias in favor of Applicant.

Jackie O'Connell

336.512.9671 mobile
Excuse brevity and typos, sent from mobile device

> On Aug 19, 2025, at 10:26 AM, Sarah Spector <[redacted]flaglercounty.gov> wrote:
>
> Good morning, Ms. O'Connell-
>
> As to your first question, Section 2.02.03(5) of the Land Development Code provides that each decision of the planning and development board must be approved by a majority vote of the members present at a

meeting in which a quorum is in attendance and voting. In the absence of a majority vote, the item fails.

As to the second question, Section 3.07.03(B)(3) of the Land Development Code allows for one continuance due to lack of necessary info ("If the planning board determines that sufficient factual data was not presented, the planning board may continue the hearing until the next scheduled meeting to allow for the preparation of such factual data. Only one (1) such continuation shall be allowed for each requested variance and/or special exception."). However, there is nothing in the Code that prohibits an additional continuance for other reasons like, here, where the Board had an even number of members and wanted to wait to vote again when there would possibly be an odd number in attendance.

Sarah Spector
Assistant County Attorney

E: [redacted]flaglercounty.gov | V: 386-313-4058 | W: www.flaglercounty.gov

Flagler County Board of County Commissioners
1769 E. Moody Blvd., Bldg 2
Bunnell, FL 32110

The mission of Flagler County is to provide high-quality services through a responsive workforce committed to excellence, integrity, in collaboration with the cities and to act as a fiscally responsible steward.

-----Original Message-----
From: Jackie OConnell <[redacted]yahoo.com>
Sent: Monday, August 18, 2025 9:50 AM
To: Sean S. Moylan <[redacted]flaglercounty.gov>
Subject: Re: follow up Board/Commission meetings

Thank you. In regard to the two other open items:

1) Would you provide the LDC Code (or relevant procedural code) section which addresses a Planning and Development Board "tie vote" and resulting decision.
2) Would you provide the Code reference(s) which indicates the situation(s)when the PDB may grant a second continuance for a variance request in an R/C district. (The only related section I identified is FC 3.07.03.B.3.)

Jackie O’Connell

336.512.9671 mobile
Excuse brevity and typos, sent from mobile device

> On Aug 18, 2025, at 8:07 AM, Sean S. Moylan
<[redacted]flaglercounty.gov> wrote:
> Good morning,
> I verified your comments/emails were not made part of the record on appeal. I instructed staff that the entire record must be presented to the BCC on appeals.
>
>
> Sean S. Moylan
> Deputy County Attorney
> Board Certified City, County, and Local Government Law
> E: [redacted]flaglercounty.gov | V: 386-313-4056
>
> Flagler County Board of County Commissioners
> 1769 E. Moody Blvd., Bldg 2
> Bunnell, FL 32110
>
>
> -----Original Message-----
> From: Jackie OConnell <[redacted]yahoo.com>
> Sent: Sunday, August 17, 2025 2:02 PM
> To: Sean S. Moylan <[redacted]flaglercounty.gov>
> Subject: follow up Board/Commission meetings
>
> Hello Mr. Moylan,
> I appreciate the time you took to talk with me last Wednesday. There were a couple of items, relating to meetings on May 5 and Aug 12, that you were going to verify or research. Would you be able to provide an update (call or email) sometime on Monday, 8/18?
> Thanks,
> Jackie O’Connell
>
> 336.512.9671 mobile
> Excuse brevity and typos, sent from mobile device

Adam Mengel, AICP, LEED AP BD+C

From: Jackie OConnell <[redacted]yahoo.com>
Sent: Friday, August 29, 2025 3:43 PM
To: Sarah Spector; Simone Kenny, AICP
Cc: Adam Mengel, AICP, LEED AP BD+C; Sean S. Moylan; Planning Dept
Subject: Re: follow up Board meetings DATE??

Which date is correct??
Below is the email from Ms Spector which indicates PDB no earlier than October.
My neighbor just received notice that Royer variance is on Planning Board's agenda for September 9. Won't he need to go to TRC before Board?
Pls confirm the PDB date asap (don't wait until Sept 2) so I can try to reschedule my plans, again.
Jackie O'Connell

Please excuse typos! Sent from my iPhone

On Aug 26, 2025, at 9:50 AM, Sarah Spector <[redacted]flaglercounty.gov> wrote:

Good morning, Ms. O'Connell-

I apologize for the delay in responding to you. We were addressing your comments and concerns internally last week and can now report to you that Mr. Royer has submitted a new application. Thus, while we do not necessarily agree with the conclusions that you have drawn below, the procedural issues raised will no longer cloud the underlying issue of whether the variance criteria have been met.

The first stop for the new application will be the Technical Review Committee on September 17, 2025. From there it will be scheduled for hearing by the Planning and Development Board, likely in October but this will be decided at the TRC meeting.

Should you have any questions regarding the foregoing, please do not hesitate to reach out.

Sarah Spector
Assistant County Attorney

E: [redacted]flaglercounty.gov | V: 386-313-4058 | W: www.flaglercounty.gov

Flagler County Board of County Commissioners
1769 E. Moody Blvd., Bldg 2
Bunnell, FL 32110

The mission of Flagler County is to provide high-quality services through a responsive workforce committed to excellence, integrity, in collaboration with the cities and to act as a fiscally responsible steward.

From: Jackie OConnell <[redacted]yahoo.com>
Sent: Tuesday, August 19, 2025 3:43 PM
To: Sarah Spector <[redacted]flaglercounty.gov>
Cc: Adam Mengel, AICP, LEED AP BD+C <[redacted]flaglercounty.gov>; Sean S. Moylan <[redacted]flaglercounty.gov>
Subject: Re: follow up Board/Commission meetings

Hello Ms. Spector,

Your email came in while my husband and I were meeting w Ms. Kenny and Lademann. They have probably shared w you a bit more color around our inquiries.

Regarding a tie vote. As you confirmed, the LDC states that in case of quorum and tie-vote, the item fails. This was the situation at the Aug 12 meeting. There was a motion and vote to approve, resulting in a tie, and thus the decision of the Board was that the variance did not pass. The Acting Chair and another Board member stated it was appropriate to move to the next agenda item. The Board vote was not rescinded. Only after the "inquiry/guidance" from Staff did the invalid discussions, motion and vote to continue ensue.

Regarding continuance. The LDC states that only one continuance may be allowed. If your position is that more continuances may be granted in cases of tie vote, then an infinite number of continuances could be needed/granted; this is not documented in Code, nor is it reasonable. In the PDB meeting, Staff stated that there is a maximum of two ("just two") continuances allowed. Which code section (or precedence) states any circumstances that allows for more than one continuance?

Given the importance of timing in "decisions", we request these procedural errors be addressed as soon as possible, certainly within a week. Should the invalid continuance be perpetuated at Sept meeting, there is compounding of a procedural error, not to mention bias in favor of Applicant.

Jackie O'Connell

336.512.9671 mobile
Excuse brevity and typos, sent from mobile device

On Aug 19, 2025, at 10:26 AM, Sarah Spector <[redacted]flaglercounty.gov> wrote:

Good morning, Ms. O'Connell-

As to your first question, Section 2.02.03(5) of the Land Development Code provides that each decision of the planning and development board must be approved by a majority vote of the members present at a meeting in which a quorum is in attendance and voting. In the absence of a majority vote, the item fails.

As to the second question, Section 3.07.03(B)(3) of the Land Development Code allows for one continuance due to lack of necessary info ("If the planning board determines that sufficient factual data was not presented, the planning board may continue the hearing until the next scheduled meeting to allow for the preparation of such factual data. Only one (1) such continuation shall be allowed for each requested variance and/or special exception."). However, there is nothing in the Code that prohibits an additional continuance for other reasons like, here, where the Board had an even number of members and wanted to wait to vote again when there would possibly be an odd number in attendance.

Sarah Spector
Assistant County Attorney

E: [redacted]flaglercounty.gov | V: 386-313-4058 | W: www.flaglercounty.gov

Flagler County Board of County Commissioners
1769 E. Moody Blvd., Bldg 2
Bunnell, FL 32110

<image002.png>

<image001.png>

<image003.png>

<image004.png>

<image005.png>

The mission of Flagler County is to provide high-quality services through a responsive workforce committed to excellence, integrity, in collaboration with the cities and to act as a fiscally responsible steward.

-----Original Message-----
From: Jackie OConnell <[redacted]yahoo.com>
Sent: Monday, August 18, 2025 9:50 AM
To: Sean S. Moylan <[redacted]flaglercounty.gov>
Subject: Re: follow up Board/Commission meetings

Thank you. In regard to the two other open items:

1) Would you provide the LDC Code (or relevant procedural code) section which addresses a Planning and Development Board "tie vote" and resulting decision.
2) Would you provide the Code reference(s) which indicates the situation(s)when the PDB may grant a second continuance for a variance request in an R/C district. (The only related section I identified is FC 3.07.03.B.3.)

Jackie O'Connell

336.512.9671 mobile
Excuse brevity and typos, sent from mobile device

> On Aug 18, 2025, at 8:07 AM, Sean S. Moylan <[redacted]flaglercounty.gov> wrote:
> Good morning,
> I verified your comments/emails were not made part of the record on appeal. I instructed staff that the entire record must be presented to the BCC on appeals.
>
>
> Sean S. Moylan
> Deputy County Attorney
> Board Certified City, County, and Local Government Law
> E: [redacted]flaglercounty.gov | V: 386-313-4056
>
> Flagler County Board of County Commissioners
> 1769 E. Moody Blvd., Bldg 2
> Bunnell, FL 32110
>
>
> -----Original Message-----
> From: Jackie OConnell <[redacted]yahoo.com>
> Sent: Sunday, August 17, 2025 2:02 PM
> To: Sean S. Moylan <[redacted]flaglercounty.gov>
> Subject: follow up Board/Commission meetings
>
> Hello Mr. Moylan,
> I appreciate the time you took to talk with me last Wednesday. There were a couple of items, relating to meetings on May 5 and Aug 12, that you were going to verify or research. Would you be able to provide an update (call or email) sometime on Monday, 8/18?
> Thanks,
> Jackie O'Connell
>
> 336.512.9671 mobile
> Excuse brevity and typos, sent from mobile device

Adam Mengel, AICP, LEED AP BD+C

From: Jackie OConnell <[redacted]yahoo.com>
Sent: Friday, August 29, 2025 4:20 PM
To: Adam Mengel, AICP, LEED AP BD+C
Cc: Sean S. Moylan; Planning Dept; Sarah Spector; Simone Kenny, AICP
Subject: Re: follow up Board meetings DATE??

Wouldn't Mr Royer need to post sign for 30 days prior to meeting?

Please excuse typos! Sent from my iPhone

On Aug 29, 2025, at 3:56 PM, Adam Mengel, AICP, LEED AP BD+C <[redacted]flaglercounty.gov> wrote:

Hi Ms. O'Connell:

The Planning and Development Board meeting scheduled for Tuesday, September 9, 2025 is correct, and Mr. Royer's variance application will be part of this meeting's agenda. Ms. Spector provided her email reply to you before we had reviewed Mr. Royer's application. His application has not materially changed since his previous application that was reviewed by the Technical Review Committee: there would be nothing more for the Committee to review on his new application.

The public notice has now been provided for the September 9, 2025 Planning and Development Board meeting. Ms. Spector's email is not the Board's public notice.

I hope that this information is helpful and please contact us with any questions.

Thank you,

Adam

Adam Mengel, AICP, LEED AP BD+C
Growth Management Director

E: [redacted]flaglercounty.gov | V: 386-313-4065 | W: www.flaglercounty.gov

Flagler County Board of County Commissioners
1769 E. Moody Blvd., Bldg 2
Bunnell, FL 32110

<image001.png>

<image002.png>

<image003.png>





The mission of Flagler County is to provide high-quality services through a responsive workforce committed to excellence, integrity, in collaboration with the cities and to act as a fiscally responsible steward.

From: Jackie OConnell <[redacted]yahoo.com>
Sent: Friday, August 29, 2025 3:43 PM
To: Sarah Spector <[redacted]flaglercounty.gov>; Simone Kenny, AICP <[redacted]flaglercounty.gov>
Cc: Adam Mengel, AICP, LEED AP BD+C <[redacted]flaglercounty.gov>; Sean S. Moylan <[redacted]flaglercounty.gov>; Planning Dept <[redacted]flaglercounty.gov>
Subject: Re: follow up Board meetings DATE??

Which date is correct??
Below is the email from Ms Spector which indicates PDB no earlier than October.
My neighbor just received notice that Royer variance is on Planning Board's agenda for September 9. Won't he need to go to TRC before Board?
Pls confirm the PDB date asap (don't wait until Sept 2) so I can try to reschedule my plans, again.
Jackie O'Connell

Please excuse typos! Sent from my iPhone

> On Aug 26, 2025, at 9:50 AM, Sarah Spector <[redacted]flaglercounty.gov> wrote:
>
> Good morning, Ms. O'Connell-
>
> I apologize for the delay in responding to you. We were addressing your comments and concerns internally last week and can now report to you that Mr. Royer has submitted a new application. Thus, while we do not necessarily agree with the conclusions that you have drawn below, the procedural issues raised will no longer cloud the underlying issue of whether the variance criteria have been met.
>
> The first stop for the new application will be the Technical Review Committee on September 17, 2025. From there it will be scheduled for hearing by the Planning and Development Board, likely in October but this will be decided at the TRC meeting.

Should you have any questions regarding the foregoing, please do not hesitate to reach out.

Sarah Spector
Assistant County Attorney

E: [redacted]flaglercounty.gov | V: 386-313-4058 | W: www.flaglercounty.gov

Flagler County Board of County Commissioners
1769 E. Moody Blvd., Bldg 2
Bunnell, FL 32110

<image002.png>

<image001.png> <image003.png>

<image004.png>

<image005.png>

The mission of Flagler County is to provide high-quality services through a responsive workforce committed to excellence, integrity, in collaboration with the cities and to act as a fiscally responsible steward.

From: Jackie OConnell <[redacted]yahoo.com>
Sent: Tuesday, August 19, 2025 3:43 PM
To: Sarah Spector <[redacted]flaglercounty.gov>
Cc: Adam Mengel, AICP, LEED AP BD+C <[redacted]flaglercounty.gov>; Sean S. Moylan <[redacted]flaglercounty.gov>
Subject: Re: follow up Board/Commission meetings

Hello Ms. Spector,

Your email came in while my husband and I were meeting w Ms. Kenny and Lademann. They have probably shared w you a bit more color around our inquiries.

Regarding a tie vote. As you confirmed, the LDC states that in case of quorum and tie-vote, the item fails. This was the situation at the Aug 12 meeting. There was a motion and vote to approve, resulting in a tie, and thus the decision of the Board was that the variance did not pass. The Acting Chair and another Board member stated it was appropriate to move to the next agenda item. The Board vote was not rescinded. Only after the "inquiry/guidance" from Staff did the invalid discussions, motion and vote to continue ensue.

Regarding continuance. The LDC states that only one continuance may be allowed. If your position is that more continuances may be granted in cases

of tie vote, then an infinite number of continuances could be needed/granted; this is not documented in Code, nor is it reasonable. In the PDB meeting, Staff stated that there is a maximum of two ("just two") continuances allowed. Which code section (or precedence) states any circumstances that allows for more than one continuance?

Given the importance of timing in "decisions", we request these procedural errors be addressed as soon as possible, certainly within a week. Should the invalid continuance be perpetuated at Sept meeting, there is compounding of a procedural error, not to mention bias in favor of Applicant.

Jackie O'Connell

336.512.9671 mobile
Excuse brevity and typos, sent from mobile device

On Aug 19, 2025, at 10:26 AM, Sarah Spector <[redacted]flaglercounty.gov> wrote:

Good morning, Ms. O'Connell-

As to your first question, Section 2.02.03(5) of the Land Development Code provides that each decision of the planning and development board must be approved by a majority vote of the members present at a meeting in which a quorum is in attendance and voting. In the absence of a majority vote, the item fails.

As to the second question, Section 3.07.03(B)(3) of the Land Development Code allows for one continuance due to lack of necessary info ("If the planning board determines that sufficient factual data was not presented, the planning board may continue the hearing until the next scheduled meeting to allow for the preparation of such factual data. Only one (1) such continuation shall be allowed for each requested variance and/or special exception."). However, there is nothing in the Code that prohibits an additional continuance for other reasons like, here, where the Board had an even number of members and wanted to wait to vote again when there would possibly be an odd number in attendance.

Sarah Spector
Assistant County Attorney

E: [redacted]flaglercounty.gov | V: 386-313-4058 | W: www.flaglercounty.gov

Flagler County Board of County Commissioners
1769 E. Moody Blvd., Bldg 2
Bunnell, FL 32110

<image002.png>

<image001.png>

<image003.png>

<image004.png>

<image005.png>

The mission of Flagler County is to provide high-quality services through a responsive workforce committed to excellence, integrity, in collaboration with the cities and to act as a fiscally responsible steward.

-----Original Message-----
From: Jackie OConnell <[redacted]yahoo.com>
Sent: Monday, August 18, 2025 9:50 AM
To: Sean S. Moylan <[redacted]flaglercounty.gov>
Subject: Re: follow up Board/Commission meetings

Thank you. In regard to the two other open items:

1) Would you provide the LDC Code (or relevant procedural code) section which addresses a Planning and Development Board "tie vote" and resulting decision.
2) Would you provide the Code reference(s) which indicates the situation(s)when the PDB may grant a second continuance for a variance request in an R/C district. (The only related section I identified is FC 3.07.03.B.3.)

Jackie O'Connell

336.512.9671 mobile
Excuse brevity and typos, sent from mobile device

> On Aug 18, 2025, at 8:07 AM, Sean S. Moylan
<[redacted]flaglercounty.gov> wrote:
> Good morning,
> I verified your comments/emails were not made part of the record on appeal. I instructed staff that the entire record must be presented to the BCC on appeals.
>
>
> Sean S. Moylan
> Deputy County Attorney
> Board Certified City, County, and Local Government Law
> E: [redacted]flaglercounty.gov | V: 386-313-4056
>
> Flagler County Board of County Commissioners
> 1769 E. Moody Blvd., Bldg 2

> Bunnell, FL 32110
>
>
> -----Original Message-----
> From: Jackie OConnell <[redacted]yahoo.com>
> Sent: Sunday, August 17, 2025 2:02 PM
> To: Sean S. Moylan <[redacted]flaglercounty.gov>
> Subject: follow up Board/Commission meetings
>
> Hello Mr. Moylan,
> I appreciate the time you took to talk with me last Wednesday. There were a couple of items, relating to meetings on May 5 and Aug 12, that you were going to verify or research. Would you be able to provide an update (call or email) sometime on Monday, 8/18?
> Thanks,
> Jackie O'Connell
>
> 336.512.9671 mobile
> Excuse brevity and typos, sent from mobile device

Adam Mengel, AICP, LEED AP BD+C

From: Jackie OConnell <[redacted]yahoo.com>
Sent: Tuesday, September 2, 2025 3:35 PM
To: Sarah Spector
Cc: Adam Mengel, AICP, LEED AP BD+C; Sean S. Moylan; Simone Kenny, AICP
Subject: Re: follow up Board meetings DATE??

I left a voicemail message last Friday (Aug 29) to clarify meeting dates, before receiving Mr. Mengel's email later that day.

Mr. Royer's application is dated Friday, August 22

Public notice letter is dated and postmarked (Monday), August 25. Staff review of Mr. Royer's application, decision to waive TRC and schedule for Sept PDB meeting must have been made before or on that day.

Effectively, Mr. Royer got another continuance.

Your email of August 26 noted a TRC meeting in September, followed by PDB meeting likely in October.

In any case, I understand that the PDB meeting is September 9.

Thank you.

Please excuse typos! Sent from my iPhone

> On Sep 2, 2025, at 1:45 PM, Sarah Spector <[redacted]flaglercounty.gov> wrote:
>
> Ms. O'Connell-
>
> I was out of the office as of last Wednesday afternoon, but I was following email traffic. Because the email from Mr. Mengel went out at the end of the day on Friday, I did not realize until I received your voicemail today that you still had a question regarding the TRC hearing date on Mr. Royer's new application.
>
> As Mr. Mengel mentioned in his email below, my August 26 email was sent in the brief period of time after Mr. Royer submitted his application but before it had been reviewed by staff. Once it was determined that TRC review was not needed, notice was provided as required for the September 9 Planning and Development Board meeting.
>
> Mr. Royer's application will be heard by the Planning and Development Board on September 9, 2025.
>
> **Sarah Spector**
> Assistant County Attorney

E: [redacted]flaglercounty.gov | V: 386-313-4058 | W: www.flaglercounty.gov

Flagler County Board of County Commissioners
1769 E. Moody Blvd., Bldg 2
Bunnell, FL 32110









The mission of Flagler County is to provide high-quality services through a responsive workforce committed to excellence, integrity, in collaboration with the cities and to act as a fiscally responsible steward.

From: Adam Mengel, AICP, LEED AP BD+C <[redacted]flaglercounty.gov>
Sent: Friday, August 29, 2025 4:34 PM
To: Jackie OConnell <[redacted]yahoo.com>
Cc: Sean S. Moylan <[redacted]flaglercounty.gov>; Planning Dept <[redacted]flaglercounty.gov>; Sarah Spector <[redacted]flaglercounty.gov>; Simone Kenny, AICP <[redacted]flaglercounty.gov>
Subject: RE: follow up Board meetings DATE??

No, it is 14 days, and the signs are posted by County staff.

From: Jackie OConnell <[redacted]yahoo.com>
Sent: Friday, August 29, 2025 4:20 PM
To: Adam Mengel, AICP, LEED AP BD+C <[redacted]flaglercounty.gov>
Cc: Sean S. Moylan <[redacted]flaglercounty.gov>; Planning Dept <[redacted]flaglercounty.gov>; Sarah Spector <[redacted]flaglercounty.gov>; Simone Kenny, AICP <[redacted]flaglercounty.gov>
Subject: Re: follow up Board meetings DATE??

Wouldn't Mr Royer need to post sign for 30 days prior to meeting?

Please excuse typos! Sent from my iPhone

> On Aug 29, 2025, at 3:56 PM, Adam Mengel, AICP, LEED AP BD+C <[redacted]flaglercounty.gov> wrote:
>
> Hi Ms. O'Connell:
>
> The Planning and Development Board meeting scheduled for Tuesday, September 9, 2025 is correct, and Mr. Royer's variance application will be part of this meeting's agenda. Ms. Spector provided her email reply to you before we had reviewed Mr. Royer's application. His application has not materially changed since his previous application that was reviewed by the Technical Review Committee: there would be nothing more for the Committee to review on his new application.

The public notice has now been provided for the September 9, 2025 Planning and Development Board meeting. Ms. Spector's email is not the Board's public notice.

I hope that this information is helpful and please contact us with any questions.

Thank you,

Adam

Adam Mengel, AICP, LEED AP BD+C
Growth Management Director

E: [redacted]flaglercounty.gov | V: 386-313-4065 | W: www.flaglercounty.gov

Flagler County Board of County Commissioners
1769 E. Moody Blvd., Bldg 2
Bunnell, FL 32110

<image002.png>

<image001.png>

<image003.png>

<image004.png>

<image005.png>

The mission of Flagler County is to provide high-quality services through a responsive workforce committed to excellence, integrity, in collaboration with the cities and to act as a fiscally responsible steward.

From: Jackie OConnell <[redacted]yahoo.com>
Sent: Friday, August 29, 2025 3:43 PM
To: Sarah Spector <[redacted]flaglercounty.gov>; Simone Kenny, AICP <[redacted]flaglercounty.gov>
Cc: Adam Mengel, AICP, LEED AP BD+C <[redacted]flaglercounty.gov>; Sean S. Moylan <[redacted]flaglercounty.gov>; Planning Dept <[redacted]flaglercounty.gov>
Subject: Re: follow up Board meetings DATE??

Which date is correct??
Below is the email from Ms Spector which indicates PDB no earlier than October.
My neighbor just received notice that Royer variance is on Planning Board's agenda for September 9. Won't he need to go to TRC before Board?
Pls confirm the PDB date asap (don't wait until Sept 2) so I can try to reschedule my plans, again.
Jackie O'Connell

Please excuse typos! Sent from my iPhone

On Aug 26, 2025, at 9:50 AM, Sarah Spector <[redacted]flaglercounty.gov> wrote:

Good morning, Ms. O'Connell-

I apologize for the delay in responding to you. We were addressing your comments and concerns internally last week and can now report to you that Mr. Royer has submitted a new application. Thus, while we do not necessarily agree with the conclusions that you have drawn below, the procedural issues raised will no longer cloud the underlying issue of whether the variance criteria have been met.

The first stop for the new application will be the Technical Review Committee on September 17, 2025. From there it will be scheduled for hearing by the Planning and Development Board, likely in October but this will be decided at the TRC meeting.

Should you have any questions regarding the foregoing, please do not hesitate to reach out.

Sarah Spector
Assistant County Attorney

E: [redacted]flaglercounty.gov | V: 386-313-4058 | W: www.flaglercounty.gov

Flagler County Board of County Commissioners
1769 E. Moody Blvd., Bldg 2
Bunnell, FL 32110

<image002.png>
<image001.png>
<image003.png>
<image004.png>
<image005.png>

The mission of Flagler County is to provide high-quality services through a responsive workforce committed to excellence, integrity, in collaboration with the cities and to act as a fiscally responsible steward.

From: Jackie OConnell <[redacted]yahoo.com>
Sent: Tuesday, August 19, 2025 3:43 PM
To: Sarah Spector <[redacted]flaglercounty.gov>
Cc: Adam Mengel, AICP, LEED AP BD+C <[redacted]flaglercounty.gov>; Sean S. Moylan <[redacted]flaglercounty.gov>
Subject: Re: follow up Board/Commission meetings

Hello Ms. Spector,

Your email came in while my husband and I were meeting w Ms. Kenny and Lademann. They have probably shared w you a bit more color around our inquiries.

Regarding a tie vote. As you confirmed, the LDC states that in case of quorum and tie-vote, the item fails. This was the situation at the Aug 12 meeting. There was a motion and vote to approve, resulting in a tie, and thus the decision of the Board was that the variance did not pass. The Acting Chair and another Board member stated it was appropriate to move to the next agenda item. The Board vote was not rescinded. Only after the "inquiry/guidance" from Staff did the invalid discussions, motion and vote to continue ensue.

Regarding continuance. The LDC states that only one continuance may be allowed. If your position is that more continuances may be granted in cases of tie vote, then an infinite number of continuances could be needed/granted; this is not documented in Code, nor is it reasonable. In the PDB meeting, Staff stated that there is a maximum of two ("just two") continuances allowed. Which code section (or precedence) states any circumstances that allows for more than one continuance?

Given the importance of timing in "decisions", we request these procedural errors be addressed as soon as possible, certainly within a week. Should the invalid continuance be perpetuated at Sept meeting, there is compounding of a procedural error, not to mention bias in favor of Applicant.

Jackie O'Connell

336.512.9671 mobile
Excuse brevity and typos, sent from mobile device

On Aug 19, 2025, at 10:26 AM, Sarah Spector <[redacted]flaglercounty.gov> wrote:

Good morning, Ms. O'Connell-

As to your first question, Section 2.02.03(5) of the Land Development Code provides that each decision of the planning and development board must be approved by a majority vote of the members present at a meeting in which a quorum is in attendance and voting. In the absence of a majority vote, the item fails.

As to the second question, Section 3.07.03(B)(3) of the Land Development Code allows for one continuance due to lack of necessary info ("If the planning board determines that sufficient factual data was not presented, the planning board may continue the hearing until the next scheduled meeting to allow for the preparation of such factual data. Only one (1) such continuation shall be allowed for each requested variance and/or special exception."). However, there is nothing in the Code that prohibits an additional continuance for other reasons like, here, where the Board had an even number of members and wanted to wait to vote again when there would possibly be an odd number in attendance.

Sarah Spector
Assistant County Attorney

E: [redacted]flaglercounty.gov | V: 386-313-4058 | W: www.flaglercounty.gov

Flagler County Board of County Commissioners
1769 E. Moody Blvd., Bldg 2
Bunnell, FL 32110

<image002.png>

<image001.png>

<image003.png>

<image004.png>

<image005.png>

The mission of Flagler County is to provide high-quality services through a responsive workforce committed to excellence, integrity, in

collaboration with the cities and to act as a fiscally responsible steward.

-----Original Message-----
From: Jackie OConnell <[redacted]yahoo.com>
Sent: Monday, August 18, 2025 9:50 AM
To: Sean S. Moylan <[redacted]flaglercounty.gov>
Subject: Re: follow up Board/Commission meetings

Thank you. In regard to the two other open items:

1) Would you provide the LDC Code (or relevant procedural code) section which addresses a Planning and Development Board "tie vote" and resulting decision.
2) Would you provide the Code reference(s) which indicates the situation(s)when the PDB may grant a second continuance for a variance request in an R/C district. (The only related section I identified is FC 3.07.03.B.3.)

Jackie O'Connell

336.512.9671 mobile
Excuse brevity and typos, sent from mobile device

> On Aug 18, 2025, at 8:07 AM, Sean S. Moylan <[redacted]flaglercounty.gov> wrote:
> Good morning,
> I verified your comments/emails were not made part of the record on appeal. I instructed staff that the entire record must be presented to the BCC on appeals.
>
>
> Sean S. Moylan
> Deputy County Attorney
> Board Certified City, County, and Local Government Law
> E: [redacted]flaglercounty.gov | V: 386-313-4056
>
> Flagler County Board of County Commissioners
> 1769 E. Moody Blvd., Bldg 2
> Bunnell, FL 32110
>
>
> -----Original Message-----
> From: Jackie OConnell <[redacted]yahoo.com>
> Sent: Sunday, August 17, 2025 2:02 PM
> To: Sean S. Moylan <[redacted]flaglercounty.gov>
> Subject: follow up Board/Commission meetings
>
> Hello Mr. Moylan,

> I appreciate the time you took to talk with me last Wednesday. There were a couple of items, relating to meetings on May 5 and Aug 12, that you were going to verify or research. Would you be able to provide an update (call or email) sometime on Monday, 8/18?
> Thanks,
> Jackie O'Connell
>
> 336.512.9671 mobile
> Excuse brevity and typos, sent from mobile device

Adam Mengel, AICP, LEED AP BD+C

From: Jackie OConnell <[redacted]yahoo.com>
Sent: Friday, September 5, 2025 8:52 AM
To: Simone Kenny, AICP; Planning Dept
Subject: Information for PDB package re 3 Pelican
Attachments: Fact Checker 3 Pelican variance.pptx

Hello Simone and Planning Team,

Attached is a file of 9 slides for inclusion in the PDB's packet re 3 Pelican variance request. There is a one-page summary of pertinent statements/assertions, compared to "facts", followed by 8 supporting documents.

If you have any issues accessing the file, don't hesitate to call me.

Kindly
confirm receipt and thank you,

Jackie O'Connell
Mockingbird Ln

Applicant - 3 Pelican Lane	Fact-checking
Pumps are "special", "unique" [from Germany] and need more space than standard pumps. (all meetings)	Badu manufacturer tech data: "**compact system", 4'H more than sufficient** for pumps and cover. **Public submitted data at August meeting. See Slides 1-2**
Does not want to place pump house on back *[NW]* corner of house because it is made of plywood. (Jan, Feb, May, July)	Flagler Co Property Appraiser website shows house **footprint as concrete/stucco with masonry** frame. No back porch is indicated. **Public submitted data at February meeting. Slides 3-4**
Pump house needed for **pumps "90% of the time**, 10% of the time needed for outdoor furniture storage" (July)	**Minimum relief** with condition of 4' height for pump house/cover was **granted**.
Pump house has **grown from 72 sf** (Feb) **to 96 sf** (July, Sept)	The pump house is essentially the size of a **house addition, proposed within 2 1/2 feet of property line, street side**. Non-conforming with neighborhood character or safe sightlines.
"Runoff issues have been settled with County Attorney" (Aug)	**Mr. Moylan did not** indicate that he **concurred** with this statement. **Existing downspouts extend beyond** Royer **property. No plan for excess lot coverage.** Public submitted **photo at February meeting. Slide 5**
"Restrictive covenants require 4' [*maximum]* on property line for fences/walls." (May, Aug)	**Correct. Public submitted recorded data at January meeting. Slide 6**
If road was properly platted, the road/ROW would be much closer to my property line [*than existing pavement]* . (Aug)	Correct. **Renderings not drawn to scale or reality**. Street/pool setback required 25'. Variance of 22.34' due to **oversized pump house. Slide 7**



Slide 1

Badu Jet Stream II pump system, per Speck Pumps (German manufacturer)

Height less than 4’

Badu Jet Stream Package D system (per Applicant's youtube link)

Safe Search | Flagler County | Politics Chat, | qPublic.net - | Public Comm | Microsoft Out | Microsoft Out | Microsoft Out | Badu Stream

File file:///C:/Users/Jackie/OneDrive/Flagler/Final%20Variance%20%232%20presentation/Badu%20Stream%20plumbing%20photo.pdf

Badu Stream plumbing photo.pdf 1 / 1 75%



1

Plumbing installation for the BaduStream ***Package D (system include three jet housings & two pumps)***

NOTE: ***(Three Jet Installation)*** *Increase the pipe size to 6" when jets are more than 30 ft. from the pump. Use 6" x 4" bushings after 4" manifold tees.*

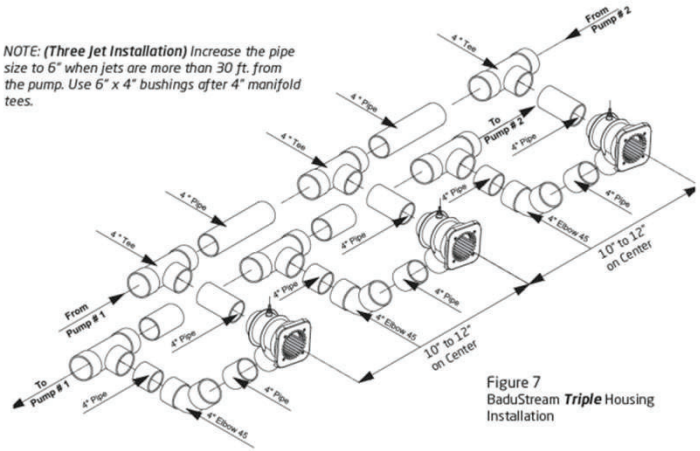

Figure 7
BaduStream ***Triple*** Housing Installation

IMPORTANT NOTE: ***CHECK VALVES MUST BE*** *used on the discharge side of each pump. Minimum 4" pipe between pump and BaduStream plumbing manifold.*

sample photos





Figure 8

Slide 3

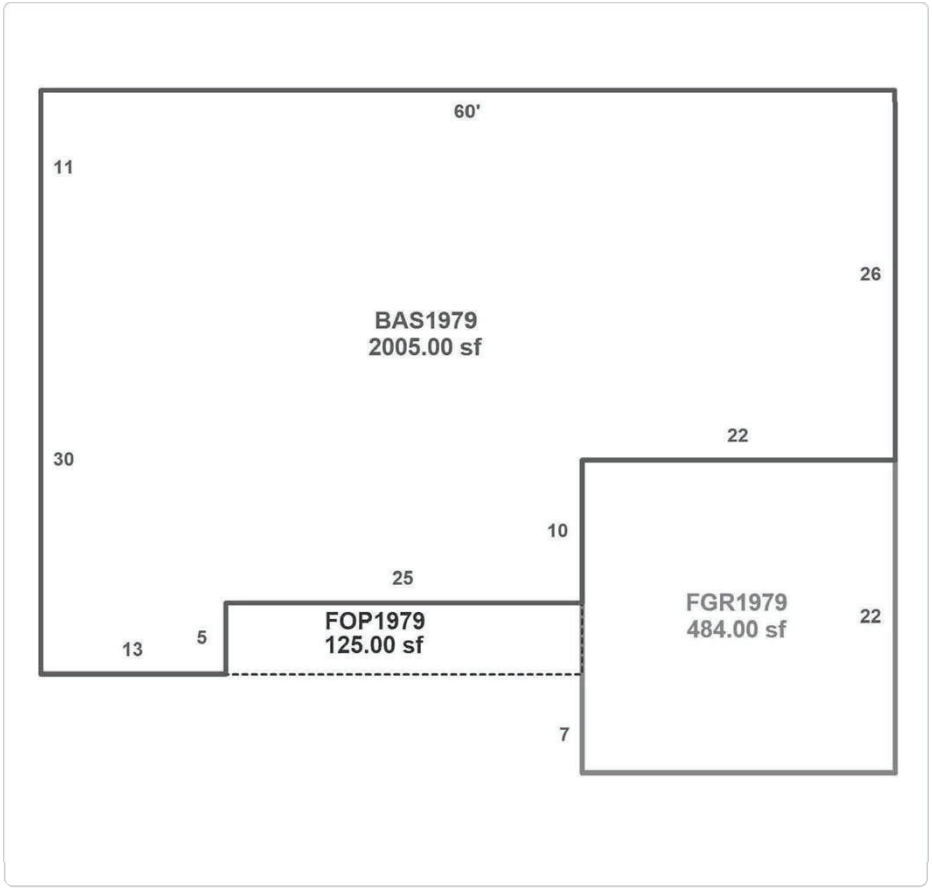

3 Pelican Ln

FOOTPRINT and WALLS – NO back porch (or plywood) indicated

Source: Flagler Co. Property Appraisers Office

Building Area Types

Type	Description	Sq. Footage	Act Year
BAS	BASE AREA	2,005	1979
FGR	F GARAGE	484	1979
FOP	F OPN PRCH	125	1979

Slide 4

Owner Information

Primary Owner
Royer Raymond R Jr & Janice L
Paxson
3 Pelican Lane
Flagler Beach, FL 32136

Parcel Summary

Parcel ID	23-11-31-5300-00000-0130
Prop ID	72186
Location Address	3 PELICAN LN FLAGLER BEACH, FL 32136
Brief Tax Description*	RIVER BEACH SUBD LOT 13 & S 8' OF LOT 16 OR 98 PG 436 OR 117 PG 673 OR 282 PG 842 OR 446 PG 1875 OR 607 PG 593 OR 989 PG 468 OR 1349 PG 424 OR 1637 PG 1824-CD OR 1664/1311-CT OR 1684/843 OR 2123/1590 OR 2231/845 (Note: *The Description above is not to be used on legal documents.)
Property Use Code	SINGLE FAMILY (000100)
Tax District	UNINCORPORATED AREA WITH MOSQUITO CONTROL (District 1)
Millage Rate	14.1324
Homestead	Y
GIS sqft	7,499.556

View Map

Residential Buildings

Building	1
Type	SINGLE FAM
Total Area	2614
Heated Area	2005
Exterior Walls	CON.STUCCO
Roof Cover	ASP/COM SH
Interior Walls	DRYWALL
Frame Type	MASONRY
Floor Cover	CERA/CLAY; HARDWOOD
Heat	FO AIR DCT
Air Conditioning	CENTRAL
Bedrooms	3
Bathrooms	2
Actual Year Built	1979
Effective Year Built	2009

Sketches

Exterior Walls: Con/Stucco
Frame: Masonry

Slide 5 – Backyard 3 Pelican



Property markers placed by Applicant

Existing downspouts extend onto adjacent property.

Impervious pool deck will extend to west property line.

Adding large pool/pump house, beyond minimum needed, will worsen runoff onto Pelican and Mockingbird.

Recorded Covenants

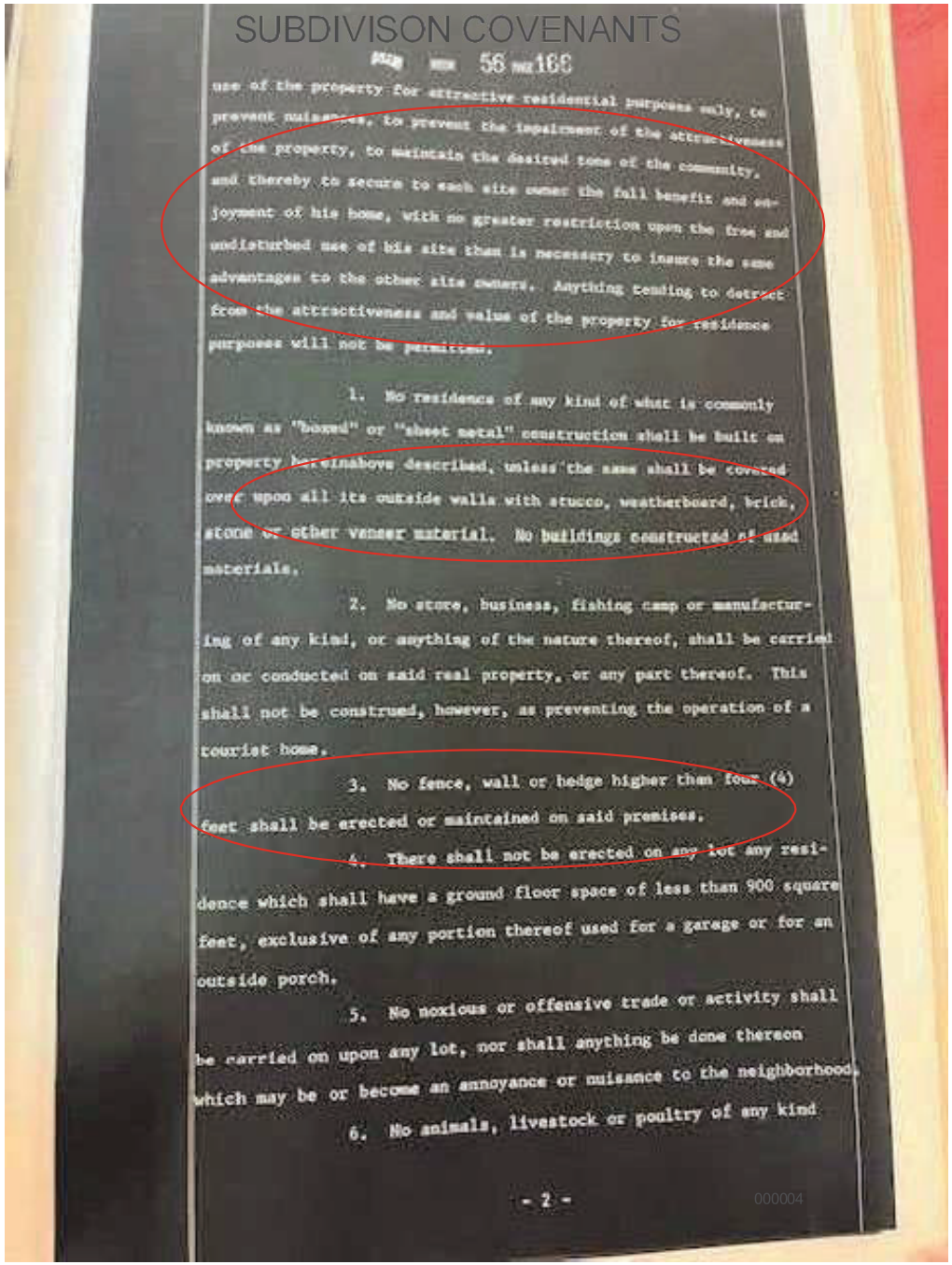

SUBDIVISON COVENANTS

Map ... 56 ... 166

use of the property for attractive residential purposes only, to prevent nuisances, to prevent the impairment of the attractiveness of the property, to maintain the desired tone of the community, and thereby to secure to each site owner the full benefit and enjoyment of his home, with no greater restriction upon the free and undisturbed use of his site than is necessary to insure the same advantages to the other site owners. Anything tending to detract from the attractiveness and value of the property for residence purposes will not be permitted.

1. No residence of any kind of what is commonly known as "boxed" or "sheet metal" construction shall be built on property hereinabove described, unless the same shall be covered over upon all its outside walls with stucco, weatherboard, brick, stone or other veneer material. No buildings constructed of used materials.

2. No store, business, fishing camp or manufacturing of any kind, or anything of the nature thereof, shall be carried on or conducted on said real property, or any part thereof. This shall not be construed, however, as preventing the operation of a tourist home.

3. No fence, wall or hedge higher than four (4) feet shall be erected or maintained on said premises.

4. There shall not be erected on any lot any residence which shall have a ground floor space of less than 900 square feet, exclusive of any portion thereof used for a garage or for an outside porch.

5. No noxious or offensive trade or activity shall be carried on upon any lot, nor shall anything be done thereon which may be or become an annoyance or nuisance to the neighborhood.

6. No animals, livestock or poultry of any kind

- 2 -

000004

River Beach Covenants

- "maintain the tone of the community"
- "not detract...from value"
- Limit fence height to 4' [property lines]

Applicant's artist drawing:
"computer-generated, not to scale"



Actual photo taken from street level.
Mockup of impaired sightlines, extending to 2.5' of property line.



Required street side setback 25'
Variance requested 22'+, for oversized pump house.

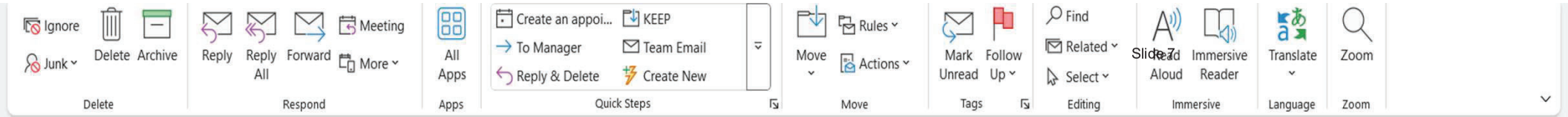

Slide 7

Variances within River Beach subdivision

Reply | Reply All | Forward | ...

Fri 7/18/2025 4:20 PM

AM

Adam Mengel, AICP, LEED AP BD+C <amengel@flaglercounty.gov>
To Jackie OConnell
Cc PublicRecords; Simone Kenny, AICP

This message has been replied to or forwarded.

Hi Ms. O'Connell:

I checked Department records for variances within River Beach using the following search terms:

- "23-11-31-5300"
- "Cardinal"
- "Mockingbird"
- "Pelican"
- "River Beach"

No files were found other than the variance files associated with Mr. Royer's request at 3 Pelican Lane.

Please contact me with any questions.

Thank you,

Adam

Adam Mengel, AICP, LEED AP BD+C
Growth Management Director

E: amengel@flaglercounty.gov | V: 386-313-4065 | W: www.flaglercounty.gov

Email from Mr. Mengel – no variances in River Beach subdivision.

Two new houses and two new pools since 2017 – undersized lots, no variances.

Owners value the neighborhood character.

From:	George Benoit
To:	Simone Kenny, AICP
Cc:	O"Connell Daniel & Jacqueline; Hare Robert & Natalie; Ayer Sari; Lane Terri
Subject:	Objection to Royer Variance Request
Date:	Sunday, September 7, 2025 2:00:57 PM
Attachments:	3 Pelican Ray-GEB 2.pdf

George

September 6, 2025

Flagler County Planning & Development

Dear sirs:

Re: Project No. 2025080063

Please include my objection again to the requested variance. I had provided the attached letter and photos for previous hearings on this matter.

Sincerely,

George E Benoit

17 Pelican Lane &
6 Driftway Terrace
Flagler Beach, FL 32136

July 8, 2025

Flagler County Planning and Development Board
1769 E. Moody Blvd., Bldg 2
Bunnell, FL 32110

RE: Project No. 2025050042 – AR 5689 – Variance in the R/C (Residential Limited Commercial) District

Dear sirs:

I am opposed to the requested variance for the following reasons:

1. I own two properties at the end of Pelican Lane. Pelican Lane slopes from route A1A down to the intracoastal waterway and all the stormwater runoff ends up in both of my yards every time we have a heavy rain.

2. The lots in the subdivision are all small under 10,000 ft.^{2}.

3. Granting a variance for a large shed roof will add to the water runoff and more accumulation on my property, which I don't need.

4. By approving this variance you will be setting a precedent for this type of request.

5. See 3 photos.

   a. Pelican Lane looking up to A1A.
   b. Sand and stone that washes down after storms.
   c. Flooded yard.

Sincerely,

George C Benoit

George E. Benoit


STOP





From:	Teresa Lane
To:	Simone Kenny, AICP
Subject:	Project No. 2025050042-AR 5689 Variance
Date:	Monday, September 8, 2025 8:22:09 AM

September 8, 2025

Flagler County Planning and Development
1768 E. Moody Blvd. Bldg. 2
Bunnell. Fl 32110

Dear Sirs;

The residents of 6 Cardinal Lane, in the River Beach Subdivision, are against the passing of the variance requested by Mr. Royer. We are concerned that his project will cause more deterioration of our roads, due to improper drainage.
We feel that granting this variance will entitle all other homeowners the same consideration.
We realize that Mr. Royer has been very persistent with his request for the variance and this has continued for many months. We ask that you please not approve this variance just to bring an end to his request.

Sincerely,

Theresa Lane
386-517-8731
Sari Ayer
386-793-4166

Sent from my iPhone

Adam Mengel, AICP, LEED AP BD+C

From: rental POC, Nan <[redacted]gmail.com>
Sent: Monday, September 8, 2025 9:02 AM
To: Planning Dept; Jackie OConnell
Subject: Sep 9 Planning Board Mtg, proj# 2025080063- 3 Pelican Lane
Attachments: Scanned Document.pdf

Pls vote NO and see my attached comments

From:	Jajlo
To:	Simone Kenny, AICP; Jeff Rizk ICE
Subject:	Project No. 2025050042-AR5689 Variance in the Residential/Limited Commercial District.
Date:	Monday, September 8, 2025 9:50:14 AM
Attachments:	To Flagler County Planning and Development.docx

Please read attached letter.
Thank you,
Dawn Harris

To: Flagler County Planning and Development

1468E Moody Blvd

Bldg 2

Bunnell Fl 32110

Project No. 2025050042-AR5689 Variance in the residential/limited commercial district.

Dear Sir/Ma'am,

The residents at 3 Cardinal Ln in the River Beach Subdivision are against the passing of the variance requested by Mr. Royer. We are concerned about this project causing further damage to our roads and this will set precedence for future homeowners to do the same thing. We know Ray Royer has been very persistent in trying to get his variance, but we ask that you do not approve this variance.

On a personal note, I grew up in this neighborhood and most of the homes were built by my great uncle Charles "Red" Bourland, who was also the mayor of Flagler Beach back in the 80' s. My goal is to keep the integrity of our neighborhood as was set down by my family.

Thank you,

Dawn Harris

5867385237

Jeff Rizk

5865562279

Adam Mengel, AICP, LEED AP BD+C

From: Simone Kenny, AICP
Sent: Monday, September 8, 2025 1:43 PM
To: Simone Kenny, AICP
Cc: Adam Mengel, AICP, LEED AP BD+C; Chuck Merenda
Subject: FW: Objection to Royer Variance Request
Attachments: 3 Pelican Ray-GEB 2.pdf

Good afternoon Planning and Development Board members:

Please see below and attached regarding Item No. 10 on tomorrow's Planning and Development Board regular meeting agenda.

Please contact us with any questions.

Thank you,

Adam

Simone Kenny, AICP
Senior Planner

E: [redacted]flaglercounty.gov | V: 386-313-4067 | W: www.flaglercounty.gov

Flagler County Board of County Commissioners

Bunnell, FL 32110

The mission of Flagler County is to provide high-quality services through a responsive workforce committed to excellence, integrity, in collaboration with the cities and to act as a fiscally responsible steward.

From: George Benoit <[redacted]icloud.com>
Sent: Sunday, September 7, 2025 2:00 PM
To: Simone Kenny, AICP <[redacted]flaglercounty.gov>
Cc: O'Connell Daniel & Jacqueline <[redacted]yahoo.com>; Hare Robert & Natalie <[redacted]bellsouth.net>; Ayer Sari <[redacted]bellsouth.net>; Lane Terri <[redacted]bellsouth.net>
Subject: Objection to Royer Variance Request

George

Adam Mengel, AICP, LEED AP BD+C

From: Simone Kenny, AICP
Sent: Monday, September 8, 2025 2:00 PM
To: [redacted]ptd.net
Cc: Adam Mengel, AICP, LEED AP BD+C; Chuck Merenda
Subject: FW: Objection to Royer Variance Request
Attachments: 3 Pelican Ray-GEB 2.pdf

Mr. Royer,

Please see below and attached regarding your item on tomorrow's Planning and Development Board regular meeting agenda.

Best,
Simone

Simone Kenny, AICP
Senior Planner

E: [redacted]flaglercounty.gov | V: 386-313-4067 | W: www.flaglercounty.gov

Flagler County Board of County Commissioners

Bunnell, FL 32110

The mission of Flagler County is to provide high-quality services through a responsive workforce committed to excellence, integrity, in collaboration with the cities and to act as a fiscally responsible steward.

From: Simone Kenny, AICP
Sent: Monday, September 8, 2025 1:43 PM
To: Simone Kenny, AICP <[redacted]flaglercounty.gov>
Cc: Adam Mengel, AICP, LEED AP BD+C <[redacted]flaglercounty.gov>; Chuck Merenda <[redacted]flaglercounty.gov>
Subject: FW: Objection to Royer Variance Request

Good afternoon Planning and Development Board members:

Please see below and attached regarding Item No. 10 on tomorrow's Planning and Development Board regular meeting agenda.

Please contact us with any questions.

Thank you,

Adam

Simone Kenny, AICP
Senior Planner

E: [redacted]flaglercounty.gov | V: 386-313-4067 | W: www.flaglercounty.gov

Flagler County Board of County Commissioners

Bunnell, FL 32110

The mission of Flagler County is to provide high-quality services through a responsive workforce committed to excellence, integrity, in collaboration with the cities and to act as a fiscally responsible steward.

From: George Benoit <[redacted]icloud.com>
Sent: Sunday, September 7, 2025 2:00 PM
To: Simone Kenny, AICP <[redacted]flaglercounty.gov>
Cc: O'Connell Daniel & Jacqueline <[redacted]yahoo.com>; Hare Robert & Natalie <[redacted]bellsouth.net>; Ayer Sari <[redacted]bellsouth.net>; Lane Terri <[redacted]bellsouth.net>
Subject: Objection to Royer Variance Request

George

September 6, 2025

Flagler County Planning & Development

Dear sirs:

Re: Project No. 2025080063

Please include my objection again to the requested variance. I had provided the attached letter and photos for previous hearings on this matter.

Sincerely,

George E Benoit

17 Pelican Lane &
6 Driftway Terrace
Flagler Beach, FL 32136

July 8, 2025

Flagler County Planning and Development Board
1769 E. Moody Blvd., Bldg 2
Bunnell, FL 32110

RE: Project No. 2025050042 – AR 5689 – Variance in the R/C (Residential Limited Commercial) District

Dear sirs:

I am opposed to the requested variance for the following reasons:

1. I own two properties at the end of Pelican Lane. Pelican Lane slopes from route A1A down to the intracoastal waterway and all the stormwater runoff ends up in both of my yards every time we have a heavy rain.

2. The lots in the subdivision are all small under 10,000 ft.^{2}.

3. Granting a variance for a large shed roof will add to the water runoff and more accumulation on my property, which I don't need.

4. By approving this variance you will be setting a precedent for this type of request.

5. See 3 photos.

   a. Pelican Lane looking up to A1A.
   b. Sand and stone that washes down after storms.
   c. Flooded yard.

Sincerely,

George E. Benoit

STOP





Adam Mengel, AICP, LEED AP BD+C

From: Dan OConnell <[redacted]yahoo.com>
Sent: Monday, September 8, 2025 2:40 PM
To: Planning Dept; Simone Kenny, AICP
Subject: 3 Pelican Variance Sept hearing
Attachments: Installation Manual - BaduStream II ENG.pdf

Attached is email correspondence with Badu Customer Service Manager confirming pumps would not be impacted by 4 foot height limit on the pump house. This was submitted last month but would like it to be included again.
Please include in public record and send to the board
Thank You

Begin forwarded message:

From: Chris Calise <c.[redacted]speck-pumps.com>
Date: August 11, 2025 at 11:49:28 AM EDT
To: Dan OConnell <[redacted]yahoo.com>
Subject: RE: Test - requirements

That's correct,

Very important, the 4" check valves will need to be installed on top of the discharge side of each pump.

Chris Calise
Customer Service Manager

Speck Pumps · 8125 Bayberry Road · Jacksonville, FL 32256 · USA
Phone: 904-739-2626 | Toll Free: 800-BADUJET (223-8538) | Fax: 904-737-5261
E-mail: c.[redacted]speck-pumps.com | Website: www.speck-pumps.com
Download Page for Brochures & Manuals: Click Here
Download the 2025 Catalog here: English Version & Spanish Version

-----Original Message-----
From: Dan OConnell <[redacted]yahoo.com>
Sent: Monday, August 11, 2025 11:34 AM
To: Chris Calise <c.[redacted]speck-pumps.com>
Subject:

Thanks. Just to confirm the pipes coming out of the pump would be less than a total of 4 feet including pump so the height of the pump house doesn't need to be higher than 4 feet correct?

Dan

Sent from my iPhone

On Aug 11, 2025, at 11:24 AM, Chris Calise <c.[redacted]speck-pumps.com> wrote:

Hi Dan,

Brochure attached with measurements. Also attached a couple of install pictures for the (2) 21-80/33GS pumps. Any questions let us know.

Thanks
Chris Calise
Customer Service Manager
Speck Pumps • 8125 Bayberry Road • Jacksonville, FL 32256 • USA
Phone: 904-739-2626 | Toll Free: 800-BADUJET (223-8538) | Fax: 904-737-5261
E-mail: c.[redacted]speck-pumps.com | Website: www.speck-pumps.com
Download Page for Brochures & Manuals: Click Here Download the 2025 Catalog here: English Version & Spanish Version

-----Original Message-----
From: Dan OConnell <[redacted]yahoo.com>
Sent: Monday, August 11, 2025 11:19 AM
To: Chris Calise <c.[redacted]speck-pumps.com>

Chris to confirm the Jet Stream Package D with 3 jets and 2 pumps only requires a pad less than 4 feet and the height required is less than 3 feet

Thanks
Dan OConnell

Sent from my iPhone

_____

NOTICE OF CONFIDENTIALITY: This e-mail from Speck Pumps-Pool Products, Inc. is intended only for the use of the individual or entity to whom it is addressed and may contain confidential, copyrighted and/or legally privileged information. If you are not the intended recipient, you are hereby notified that any dissemination, distribution or copying of this e-mail is strictly prohibited. It is strictly forbidden to share any part of this message with any third party, without written consent of the sender. If you received this e-mail in error please return it to the sender and destroy the original message. Thank you.

While anti-virus software is in place the recipient should be aware that this e-mail and any attachments might not be free from viruses in their various forms. Speck Pumps-Pool Products, Inc. accepts no liability for any loss or damage that may occur as a result of the transmission to the recipient.

<Cut sheet - Model 21-80 G GS.pdf>

<Check Valve Install -1.jpg>

<Check Valve Install -4.jpg>

_____

NOTICE OF CONFIDENTIALITY: This e-mail from Speck Pumps-Pool Products, Inc. is intended only for the use of the individual or entity to whom it is addressed and may contain confidential, copyrighted and/or legally privileged information. If you are not the intended recipient, you are hereby notified that any dissemination, distribution or copying of this e-mail is strictly prohibited. It is strictly forbidden to share any part of this message with any third party, without written consent of the sender. If you received this e-mail in error please return it to the sender and destroy the original message. Thank you.

While anti-virus software is in place the recipient should be aware that this e-mail and any attachments might not be free from viruses in their various forms. Speck Pumps-Pool Products, Inc. accepts no liability for any loss or damage that may occur as a result of the transmission to the recipient.

From:	Dan OConnell
To:	Planning Dept; Simone Kenny, AICP
Subject:	3 Pelican Variance Sept hearing
Date:	Monday, September 8, 2025 2:42:28 PM
Attachments:	Installation Manual - BaduStream II ENG.pdf

Attached is email correspondence with Badu Customer Service Manager confirming pumps would not be impacted by 4 foot height limit on the pump house. This was submitted last month but would like it to be included again.
Please include in public record and send to the board
Thank You

Begin forwarded message:

From: Chris Calise <c.[redacted]speck-pumps.com>
Date: August 11, 2025 at 11:49:28 AM EDT
To: Dan OConnell <[redacted]yahoo.com>
Subject: RE: Test - requirements

That's correct,

Very important, the 4" check valves will need to be installed on top of the discharge side of each pump.

Chris Calise
Customer Service Manager

Speck Pumps · 8125 Bayberry Road · Jacksonville, FL 32256 · USA
Phone: 904-739-2626 | Toll Free: 800-BADUJET (223-8538) | Fax: 904-737-5261
E-mail: c.[redacted]speck-pumps.com | Website: www.speck-pumps.com
Download Page for Brochures & Manuals: Click Here
Download the 2025 Catalog here: English Version & Spanish Version

-----Original Message-----
From: Dan OConnell <[redacted]yahoo.com>
Sent: Monday, August 11, 2025 11:34 AM
To: Chris Calise <c.[redacted]speck-pumps.com>
Subject:

Thanks. Just to confirm the pipes coming out of the pump would be less than a total of 4 feet including pump so the height of the pump house doesn't need to be higher than 4 feet correct?

Dan

Sent from my iPhone

On Aug 11, 2025, at 11:24 AM, Chris Calise <c[redacted]speck-pumps.com> wrote:

Hi Dan,

Brochure attached with measurements. Also attached a couple of install pictures for the (2) 21-80/33GS pumps. Any questions let us know.

Thanks

Chris Calise

Customer Service Manager

Speck Pumps • 8125 Bayberry Road • Jacksonville, FL 32256 • USA

Phone: 904-739-2626 | Toll Free: 800-BADUJET (223-8538) | Fax:

904-737-5261

E-mail: c[redacted]speck-pumps.com | Website: www.speck-pumps.com

Download Page for Brochures & Manuals: Click Here Download the 2025

Catalog here: English Version & Spanish Version

-----Original Message-----

From: Dan OConnell <[redacted]yahoo.com>

Sent: Monday, August 11, 2025 11:19 AM

To: Chris Calise <c[redacted]speck-pumps.com>

Chris to confirm the Jet Stream Package D with 3 jets and 2 pumps only

requires a pad less than 4 feet and the height required is less than 3

feet

Thanks

Dan OConnell

Sent from my iPhone

NOTICE OF CONFIDENTIALITY: This e-mail from Speck Pumps-Pool Products, Inc. is intended only for the use of the individual or entity to whom it is addressed and may contain confidential, copyrighted and/or legally privileged information. If you are not the intended recipient, you are hereby notified that any dissemination, distribution or copying of this e-mail is strictly prohibited. It is strictly forbidden to share any part of this message with any third party, without written consent of the sender. If you received this e-mail in error please return it to the sender and destroy the original message. Thank you.

While anti-virus software is in place the recipient should be aware that this e-mail and any attachments might not be free from viruses in their various forms. Speck Pumps-Pool Products, Inc. accepts no liability for any loss or damage that may occur as a result of the transmission to the recipient.

<Cut sheet - Model 21-80 G GS.pdf>

<Check Valve Install -1.jpg>

<Check Valve Install -4.jpg>

NOTICE OF CONFIDENTIALITY: This e-mail from Speck Pumps-Pool Products, Inc. is intended only for the use of the individual or entity to whom it is addressed and may contain confidential, copyrighted and/or legally privileged

information. If you are not the intended recipient, you are hereby notified that any dissemination, distribution or copying of this e-mail is strictly prohibited. It is strictly forbidden to share any part of this message with any third party, without written consent of the sender. If you received this e-mail in error please return it to the sender and destroy the original message. Thank you.

While anti-virus software is in place the recipient should be aware that this e-mail and any attachments might not be free from viruses in their various forms. Speck Pumps-Pool Products, Inc. accepts no liability for any loss or damage that may occur as a result of the transmission to the recipient.

From:	Jan
To:	Simone Kenny, AICP; Adam Mengel, AICP, LEED AP BD+C
Subject:	Request for Fair Review Application #2025080063 of Pool House/Pump House/Shed Project
Date:	Tuesday, September 9, 2025 12:36:25 AM

Dear Simone,

I am writing this letter as the homeowner. My husband, Raymond Royer, has been submitting and presenting applications to the county since February 2025. He has attended the TRC meetings prior to each application, asked questions, and sought guidance every step of the way — and yet we are still at a dead end.

Our project includes a small pool and a pool house/pump house/shed designed to be 9’7” high. The county’s suggestion that we should use a 4-foot high shed is not practical or realistic. The structure must allow someone to stand inside to properly service the pool motor and to store patio furniture and equipment during storms. Our design is professional, aesthetically matches our home, and fully complies.

Instead of focusing on the facts and zoning requirements, we have been subjected to months of irrelevant and baseless objections from a small group of neighbors, two of which do not even reside in our community full-time. These property owners have been the most vocal about our project, even though it does not directly affect their property or rights as owners. Their objections are nothing more than ridiculous guessing and misunderstandings. To suggest we “swim in the ocean,” “throw patio furniture into the pool,” or that the pool house could somehow become living quarters or an Airbnb has no basis in reality.

One neighbor even claimed our professional renderings are “just computer-generated pictures” instead of recognizing that they were created to county specifications. This same neighbor went so far as to take a photo of our home and use a marker tool to draw their own version of what they thought we were requesting. That type of misrepresentation is absurd and misleading.

We have always spoken with our neighbors cordially and have acted in good faith throughout this process, following every rule, request, and requirement from the county. The truth is that some neighbors are using unrelated disputes — like our private roadway disagreements — to stir up conflict and delay our project.

It is our request that the county:

1. Disregard irrelevant, speculative, and inaccurate objections that are not tied to this project or zoning requirements.
2. Recognize that our project meets county requirements and is designed responsibly.
3. Provide a fair and timely resolution so we can move forward without further hardship.

This situation has cost us significant personal time, reapplication fees, rendering design expenses, and repeated document submissions. It has also caused unnecessary stress and division in the community.

We expect and request a fair decision in this matter, and we ask that the county reciprocate the good faith we have shown throughout this process by providing a timely and reasonable resolution.

The pool house/pump house/shed dimensions are well under the county's maximum allowance of 12 feet in height, and our project fully complies with the applicable standards.

Thank you for your attention and for moving this forward based on facts and requirements, not speculation.

Sincerely,

Jan Paxson

3 Pelican Lane

Adam Mengel, AICP, LEED AP BD+C

From: Jackie O'Connell <[redacted]yahoo.com>
Sent: Tuesday, September 9, 2025 9:15 AM
To: Simone Kenny, AICP; Planning Dept
Subject: Runoff 3 Pelican for Public Record and PDB
Attachments: 3 Pelican runoff after rainstorm.jpeg

This is a photo of the runoff in front of 3 Pelican taken after the rainstorm night before last (~7pm Sept 7, Sunday). The water runoff will be worse when the impervious pool deck and (possible) large pump house are built. Unless Mr. Royer intends to redirect hi**s existing front downspouts across his front lawn** toward Pelican**,** a **similar issue** will be created on Mockingbird when the **existing front side** downspouts are redirected to Mockingbird**.** And when Mr. Royer's **existing downspouts on back corner of his house are removed off adjacent property*** which is not owned by Mr. Royer **and redirected to Mockingbird**, it will be an **even worse issue** on Mockingbird.

When we get 12-15" rain during a hurricane followed by high tides, the neighborhood streets are going to have a real problem. This is why **we've requested the 3 Pelican variance plan address how runoff will be mitigated and/or kept on Royer property**.

***** photo showing Royer backyard downspouts extending beyond his property line was previously submitted

Thank you,

Jackie O'Connell
[redacted]yahoo.com
336.512.9671 mobile



Adam Mengel, AICP, LEED AP BD+C

From: Simone Kenny, AICP
Sent: Tuesday, September 9, 2025 9:46 AM
To: [redacted]ptd.net
Cc: Adam Mengel, AICP, LEED AP BD+C; Chuck Merenda
Subject: FW: 3 Pelican Variance Sept hearing
Attachments: Installation Manual - BaduStream II ENG.pdf

Mr. Royer,

Please see below and attached regarding your item on tomorrow's Planning and Development Board regular meeting agenda.

Best,
Simone

Simone Kenny, AICP
Senior Planner

E: [redacted]flaglercounty.gov | V: 386-313-4067 | W: www.flaglercounty.gov

Flagler County Board of County Commissioners

Bunnell, FL 32110

The mission of Flagler County is to provide high-quality services through a responsive workforce committed to excellence, integrity, in collaboration with the cities and to act as a fiscally responsible steward.

From: Simone Kenny, AICP
Sent: Tuesday, September 9, 2025 9:46 AM
To: Simone Kenny, AICP <[redacted]flaglercounty.gov>
Cc: Adam Mengel, AICP, LEED AP BD+C <[redacted]flaglercounty.gov>; Chuck Merenda <[redacted]flaglercounty.gov>
Subject: FW: 3 Pelican Variance Sept hearing

Please see below and attached regarding Item No. 10 on tomorrow's Planning and Development Board regular meeting agenda.

Please contact us with any questions.

Thank you,
Simone

Simone Kenny, AICP
Senior Planner

E: [redacted]flaglercounty.gov | V: 386-313-4067 | W: www.flaglercounty.gov

Flagler County Board of County Commissioners

Bunnell, FL 32110

The mission of Flagler County is to provide high-quality services through a responsive workforce committed to excellence, integrity, in collaboration with the cities and to act as a fiscally responsible steward.

From: Dan OConnell <[redacted]yahoo.com>
Sent: Monday, September 8, 2025 2:40 PM
To: Planning Dept <[redacted]flaglercounty.gov>; Simone Kenny, AICP <[redacted]flaglercounty.gov>
Subject: 3 Pelican Variance Sept hearing

Attached is email correspondence with Badu Customer Service Manager confirming pumps would not be impacted by 4 foot height limit on the pump house. This was submitted last month but would like it to be included again.
Please include in public record and send to the board
Thank You

Begin forwarded message:

> **From:** Chris Calise <c.[redacted]speck-pumps.com>
> **Date:** August 11, 2025 at 11:49:28 AM EDT
> **To:** Dan OConnell <[redacted]yahoo.com>
> **Subject: RE: Test - requirements**
>
> That's correct,

Very important, the 4" check valves will need to be installed on top of the discharge side of each pump.

Chris Calise
Customer Service Manager

Speck Pumps · 8125 Bayberry Road · Jacksonville, FL 32256 · USA
Phone: 904-739-2626 | Toll Free: 800-BADUJET (223-8538) | Fax: 904-737-5261
E-mail: c.[redacted]speck-pumps.com | Website: www.speck-pumps.com
Download Page for Brochures & Manuals: Click Here
Download the 2025 Catalog here: English Version & Spanish Version

-----Original Message-----
From: Dan OConnell <[redacted]yahoo.com>
Sent: Monday, August 11, 2025 11:34 AM
To: Chris Calise <c.[redacted]speck-pumps.com>
Subject:

Thanks. Just to confirm the pipes coming out of the pump would be less than a total of 4 feet including pump so the height of the pump house doesn't need to be higher than 4 feet correct?

Dan

Sent from my iPhone

> On Aug 11, 2025, at 11:24 AM, Chris Calise <c.[redacted]speck-pumps.com> wrote:
>
> Hi Dan,
>
> Brochure attached with measurements. Also attached a couple of install pictures for the (2) 21-80/33GS pumps. Any questions let us know.
>
> Thanks
> Chris Calise
> Customer Service Manager
> Speck Pumps • 8125 Bayberry Road • Jacksonville, FL 32256 • USA
> Phone: 904-739-2626 | Toll Free: 800-BADUJET (223-8538) | Fax: 904-737-5261
> E-mail: c.[redacted]speck-pumps.com | Website: www.speck-pumps.com
> Download Page for Brochures & Manuals: Click Here Download the 2025 Catalog here: English Version & Spanish Version

-----Original Message-----

From: Dan OConnell <[redacted]yahoo.com>

Sent: Monday, August 11, 2025 11:19 AM

To: Chris Calise <c.[redacted]speck-pumps.com>

Chris to confirm the Jet Stream Package D with 3 jets and 2 pumps only requires a pad less than 4 feet and the height required is less than 3 feet

Thanks

Dan OConnell

Sent from my iPhone

NOTICE OF CONFIDENTIALITY: This e-mail from Speck Pumps-Pool Products, Inc. is intended only for the use of the individual or entity to whom it is addressed and may contain confidential, copyrighted and/or legally privileged information. If you are not the intended recipient, you are hereby notified that any dissemination, distribution or copying of this e-mail is strictly prohibited. It is strictly forbidden to share any part of this message with any third party, without written consent of the sender. If you received this e-mail in error please return it to the sender and destroy the original message. Thank you.

While anti-virus software is in place the recipient should be aware that this e-mail and any attachments might not be free from viruses in their various forms. Speck Pumps-Pool Products, Inc. accepts no liability for any loss or damage that may occur as a result of the transmission to the recipient.

<Cut sheet - Model 21-80 G GS.pdf>

<Check Valve Install -1.jpg>

<Check Valve Install -4.jpg>

NOTICE OF CONFIDENTIALITY: This e-mail from Speck Pumps-Pool Products, Inc. is

intended only for the use of the individual or entity to whom it is addressed and may contain confidential, copyrighted and/or legally privileged information. If you are not the intended recipient, you are hereby notified that any dissemination, distribution or copying of this e-mail is strictly prohibited. It is strictly forbidden to share any part of this message with any third party, without written consent of the sender. If you received this e-mail in error please return it to the sender and destroy the original message. Thank you.

While anti-virus software is in place the recipient should be aware that this e-mail and any attachments might not be free from viruses in their various forms. Speck Pumps-Pool Products, Inc. accepts no liability for any loss or damage that may occur as a result of the transmission to the recipient.

Badu®Stream //

Counter Swimming Unit

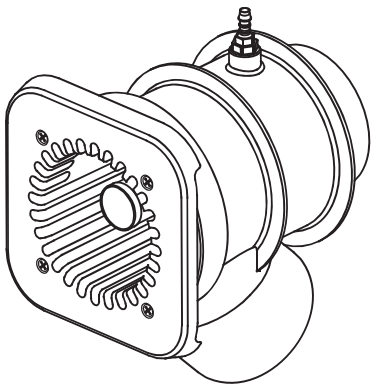

SPECK pumps

Rev. 08/23

Technical Support:

Address: Speck Pumps
8125 Bayberry Road
Jacksonville, FL. 32256
USA

Hours: (Monday - Friday) 8:00 am to 5:00 pm EST
Toll Free: 800-223-8538
Phone: 904-739-2626
Fax: 904-737-5261

Website: usa.speck-pumps.com

Email: technical.usa@speck-pumps.com

Date of Installation:	
Installed by:	
Serial Number:	
For Service Call:	

Manufactured by Speck Pumps, Jacksonville Florida USA, ©2023 All Rights Reserved.

This document is subject to change without notice.

Table of Contents

1	*Important Safety Instructions*	*4*
	SwimJet Combination Fitting Manufacturers Warnings	4
	General Safety Instructions	5
2	*General Description*	*7*
3	*Installation Information*	*7*
	Receiving Information	7
	Plumbing Installation	8
	Concrete or Gunite Installation	13
	Liner and/or Fiberglass Pool Installation	15
	Removal of Liner	16
	Electrical - SPECK Controller Installation	17
4	*Service and Maintenance*	*21*
	Nozzle Adjustments	21
	Winterizing	21
5	*Frequently Asked Questions*	*22*
	Frequently Asked Questions	22
	Troubleshooting	23
6	*Product Specification*	*25*
	Replacement Parts and Exploded View	25
7	*Product Information*	*27*
	Product Registration	27
	Limited Warranty	27

Badu®Stream // Certifications

APSP ANSI/APSP-16

NRTL LISTED MET c US Complies with UL 1563 CSA C22.2 No. 218.1-M89 Swimming Pool Equipment Listing #E212148

UL®

VGBA 2017

1 Important Safety Instructions

WARNING: *Before Installing this product, read and follow all warning notices and instructions which are included. Failure to follow safety warnings and instructions can result in severe injury, death, or property damage. Call (800) 223-8538 or visit www.usa.speck-pumps.com for additional copies of these instructions.*

Swim Jet Combination Fitting - Manufacturers Warnings

MUST BE INSTALLED by an experienced and qualified pool industry professional **ONLY.**

Attention Installer: This manual contains important information about installation, operation, and safe use of this product. This information should be given to the owner and/or operator of this equipment. Most states and local codes regulate the construction, installation and operation of pools and spas. It is important to comply with these codes, many which regulate the installation and use of this product.

1. ***DO NOT*** *locate this fitting in seating areas or on the back rests for such seating areas.*

2. *This fitting should be mounted in the vertical pool wall only per manufacturer's instructions. No modifications to the swimjet are permitted.*

3. *The anti-entrapment cover, when installed, shall not protrude more than 2 in. (51mm) from the finished surface of the pool in which the swimjet is installed.*

4. ***Service Access:*** *The use of adhesives or other attachment methods that prevent access to suction piping or swimjet components is* ***prohibited.***

5. *The anti-entrapment cover must be hand-checked for snugness to the jet housing after installation.*

6. *The anti-entrapment cover and fasteners shall be examined for damage or tampering each operational day.*

7. *Any missing, broken, or cracked fittings must be replaced before using this product. Only genuine Speck replacement parts may be used.*

8. *Acceptable fittings/pipe sizes are listed on page 8 of this manual. No other sizes are permitted.*

9. *Never exceed the maximum flow rate stated on this product.*

10. *The anti-entrapment cover must be in place when using this product.* ***DO NOT*** *use this product if the cover is missing, broken, or loose, and it shall be replaced before bathers are allowed to use the pool.*

11. *The anti-entrapment cover (part# 8) should be replaced within 10 years from installation date.*

12. *Installation requires a Phillips screw driver. Hand tighten only.* ***DO NOT*** *use electrical or air drills.*

13. *Consult your physician before exercising with the Badu®Stream II or using the massage hose.*

14. ***DO NOT*** *permit children to use this product unless they are closely supervised at all times.*

15. ***DO NOT*** *remove any safety alert labels such as* ***DANGER, WARNING,*** *or* ***CAUTION****. Keep safety alert labels in good condition and replace missing or damaged labels.*

Swim Jet Combination Fitting - Manufacturers Warnings - continued

16. *Stay alert, watch what you are doing and use common sense.* ***DO NOT*** *use unit if you are tired and/or exhausted.* ***DO NOT*** *use unit while under the influence of drugs, alcohol, or any medications.*

CAUTION: ***DO NOT*** *increase pump size; this will increase the flow rate through the system and exceed the maximum flow rate stated on this product.*

IMPROPER INSTALLATION OR USE OF THIS PRODUCT MAY PRESENT A RISK OF HAIR OR BODY ENTRAPMENT AND DROWNING. *Install this equipment in accordance with the instructions provided.*

As the manufacturer, Speck Pumps-Pool Products, Inc., hereby certifies that their Swim Jet Combination Fitting meets or exceeds the requirements of the Virginia Graeme Baker Pool & Spa Safety Act, VGBA 2017 and ANSI/ APSP 16 standards and safety regulations as set forth by the Consumer Products Safety Commission.

"Read, and then keep these instructions for future reference"

General Safety Instructions

The following guidelines provide information to minimize the risk of injury to users of pools, spas, and hot tubs.

WARNING: TO REDUCE THE RISK OF ENTRAPMENT HAZARD

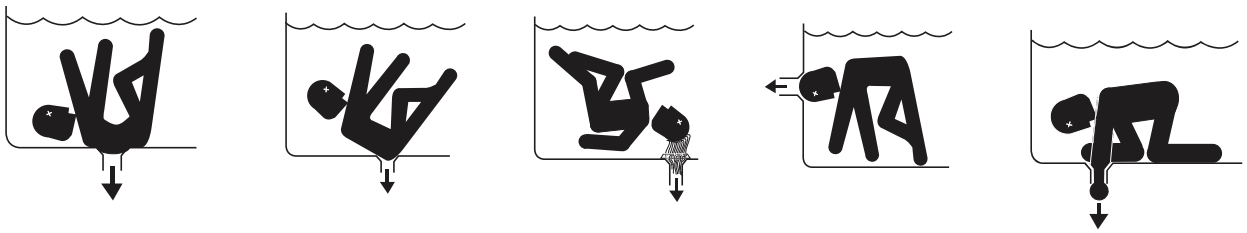

Pool and spa pumps produce high levels of suction, which can pose extreme danger if a person comes in close proximity to an open pool or spa drain or if a drain cover is loose, cracked, broken or missing. Pool and spa pumps move large volumes of water, which can pose extreme danger if a person's hair comes in close proximity to a drain that is not the proper size for the pump or pumps.

If not an approved single, unblockable outlet, a minimum of two functioning suction outlets per pump must be installed. Suction outlets in the same plane (i.e. floor or wall) must be installed a minimum of three (3) feet (1 meter) apart, as measured from center point to center point. Dual suction fittings shall not be located on seating areas or on the backrest for such seating areas. If any suction outlets are located closer they shall be located on two different planes (i.e. one on the bottom and one on the vertical wall, or one each on two separate vertical walls).

WARNING: *Failure to keep suction outlet components clear of debris, such as leaves, dirt, hair, paper and other material can result in an increased potential for suction entrapment.*

If not a single, unblockable outlet, in the event of one suction outlet being completely blocked, the remaining suction outlets serving the system shall have a flow rating capable of the full flow of the pump(s) or the specific suction system. If in doubt about the rating and/or head loss curve of your system, consult a qualified pool or spa professional and/or your respective equipment manufacturer(s). Also, double check with your local building/ health authorities regarding single vs. multiple drain installations, etc.

Regularly inspect all drain covers for cracks, damage and advanced weathering. If a drain cover becomes loose, cracked, damaged, broken or is missing, close the pool or spa immediately, post a notice and keep the pool or spa closed until an appropriate VGBA 2017 certified drain cover is properly installed.

WATER VELOCITY AND FLOW RATES

The maximum water velocity through drain covers is limited by some local regulations, for example some state health departments limit the velocity through public pool drain covers to 1.5 feet per second. This velocity limit is lower than the flow rating provided by the ANSI/APSP 16 certification; therefore local limit applies and must be followed. Never exceed the flow rating listed on the cover even if local code does not provide a velocity limit.

For additional information on proper installation refer to The Association of Pool & Spa Professionals ANSI/APSP-7 Standard and the US Consumer Product Safety Commission Guidelines for Entrapment Hazard.

VGB Compliance - VIRGINIA GRAEME BAKER POOL AND SPA SAFETY ACT

The Virginia Graeme Baker Pool and Spa Safety Act raises certain new requirements on owners and operators of swimming pools and spas.

Pools or spas constructed on or after December 19, 2008, shall utilize:

(A) No submerged suction outlets, a gravity drainage system with ANSI/APSP compliant cover(s), one or more unblockable outlets; or
(B) A multiple main drain system without isolation capability with suction outlet covers that meet ANSI/APSP 16 Suction Fittings for Use in Swimming Pools, Wading Pools, Spas, and Hot Tubs and either:
    (i) A safety vacuum release system (SVRS) meeting ASME/ANSI A112.19.17 Manufactured Safety Vacuum Release Systems (SVRS) for Residential and Commercial Swimming Pool, Spa, Hot Tub, and Wading Pool Suction Systems and/or ASTM F2387 Standard Specification for Manufactured Safety Vacuum Release Systems (SVRS) for Swimming Pools, Spas and Hot Tubs or
    (ii) A properly designed and tested suction-limiting vent system or
    (iii) An automatic pump shut-off system.

Pools and spas constructed prior to December 19, 2008, with a single submerged suction outlet shall use a suction outlet cover that meets ANSI/APSP 16 and either:

(A) A multiple main drain system without isolation capability, or a single (VGBA 2017 compliant) unblockable suction outlet, or
(B) A safety vacuum release system (SVRS) meeting ASME/ANSI A112.19.17 and/or ASTM F2387, or
(C) A properly designed and tested suction-limiting vent system, or
(D) An automatic pump shut-off system, or
(E) Disabled submerged outlets, or
(F) Suction outlets shall be reconfigured into return inlets.

For more information about the Virginia Graeme Baker Pool and Spa Safety Act, contact the Consumer Product Safety Commission at (301) 504-7908 or visit www.cpsc.gov.

WARNING: *Risk of Electrical Shock or Electrocution*



Pool pump must be installed by a licensed or certified electrician or a qualified pool serviceman in accordance with the National Electrical Code and all applicable local codes and ordinances. Improper installation will create an electric hazard which could result in death or serious injury to pool users, installers, or others due to electrical shock, and may also cause damage to property.

Always disconnect power to the pool pump at the circuit breaker before servicing the pump. *Failure to do so could result in death or serious injury to serviceman, pool users, or others due to electric shock.*

2 General Description

General Description

The BaduStream *II* SwimJet Systems from Speck Pumps are designed to be installed during the construction of your pool to create a water treadmill for anyone wanting a therapeutic and effective exercise.

The BaduStream *II* can be installed in any type of pool, large or small, from gunite to vinyl liner. It has no protruding parts ensuring pool user's safety, is very compact and installs at minimal cost. The self-contained, flush-mounted unit is a jet-propulsion system that pumps water into the pool creating a current in excess of 5,700 gallons per minute from a single recessed jet housing. Topping off the experience is the pulsating massage hose which can be attached to the jet nozzles for easy and convenient massage treatments for joints and muscles. *(NOTE: The massage hose is sold separately.)*

3 Installation Information

Planning

The BaduStream II is normally incorporated into the original pool design. However, it can be added to any pool at a later date. The BaduStream II has no protruding parts, ensuring the pool user's safety. It is very compact and installs at minimal cost. The system can be installed in any size pool.

We suggest a minimum pool size of 8 ft wide x 15 ft long x 3 ft deep to work effectively. Most prefer 16 ft. in length or longer. The extra length allows enough length for a swimmer to comfortably drift back and swim up stream.

To ensure that there is a clear unobstructed swim lane, it is key to position the swimjets away from surroundings walls, benches, stairs, etc. Obstructions near the swimjets can disrupt the current.

1 Ideal Locations*
2 Alternative Locations*
❚❚ Unfavorable Locations

Here are a few examples:

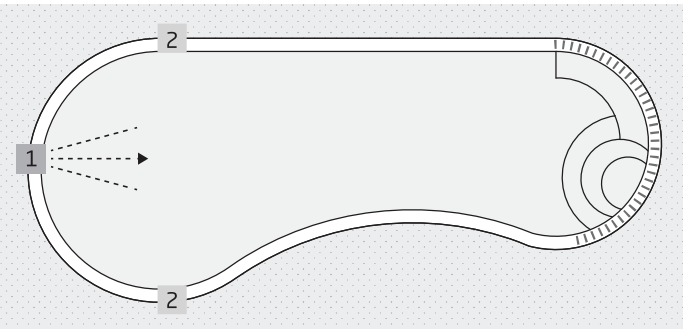

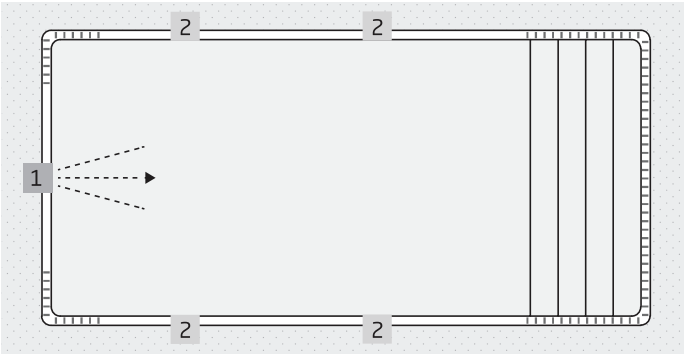

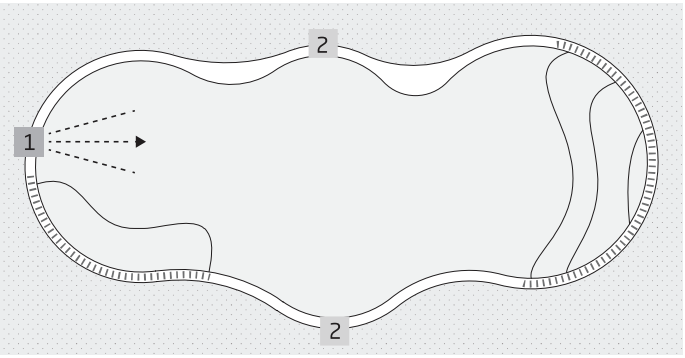

Reminder: BADU SwimJet Systems require a clear **unobstructed area within the swimming pool that is 8 feet wide x 15 feet long x 3 feet deep to work effectively. This "swimming envelope" allows enough length for a swimmer to comfortably drift back and swim up stream.*

Receiving Information

1. Upon receipt of the swimjet system, check the cartons for damage. Open each carton and check the pump(s), jet housing(s), and control box for concealed damage, such as cracks, dents, or a bent base. If damage is found, contact the shipper or distributor where the swimjet was purchased.

2. Inspect the contents of each carton and verify that all parts are included. *(See Image 1)*

A. Flush-mount jet housing

B. Square, anti-entrapment cover (8 1/4" x 8 1/4") undetectable pump suction. *(Optional Round Cover available)*

C. Adjustable water flow jet nozzle

D. Air regulator adjusts amount of air bubbles in water flow.

E. Control box complete with GFCI and WiFi control module.

F. SPECK Model 21-80/33GS 4.0 HP (or a SPECK Model 72-VI 3.5 HP) self-priming, single phase plastic pump with built-in thermal overload *(no motor starter required)*. Optional three phase pump and control box available. (*NOTE: Flooded suction pump available for installation below water level.)*

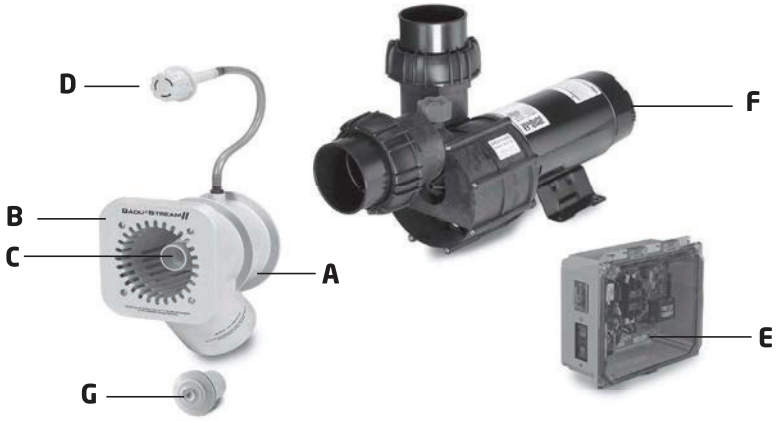

Image 1
BaduStream II System (1 jet & 4 HP pump)

G. System (ON/OFF) LED Push Button - Complete with 1.5" threaded housing fits into any 1.5" return fitting. The push button turns the swimjet system ON/OFF. Waterproof button may be installed below water level.

Plumbing Installation

CAUTION: *The discharge connection is at the center of the back of the jet housing. The suction connection is at the bottom of the jet housing.*

CAUTION: *The suction line should remain below water level from the suction connection at the jet housing to a point directly beneath the pump.*

CAUTION: *The center of the BaduStream jet nozzle(s) must be located 12" **BELOW** the water line for maximum performance and efficiency. The air regulator(s) should be located 3-4" **ABOVE** the water line.*

CAUTION: *In areas with soft soil conditions or with frequent earth movement, a flexible section of 4" hose should be installed at the back of the jet housing to prevent plumbing or jet housing damage.*

CAUTION: *For trouble-free pump priming (up to 4 feet above the water line), first install a 6" long riser in the discharge connection on top of the pump(s). Then install an elbow and lead the discharge line(s) downward to the discharge connection(s) at the BaduStream jet housing(s) (Not required with 3.5 HP pump Model 72). On systems with 3 jet housings and 2 pumps, check valves **MUST** be installed at the discharge connections at each pump.*

CAUTION: *Allow at least 12 hours curing and bonding time. Insufficient curing and bonding times can result in leaks and flooding.*

CAUTION: *Throughout the entire installation, make sure the plumbing connected to the BaduStream jet housing is well supported. Unsupported plumbing **WILL** crack the jet housing.*

CAUTION: ***DO NOT*** *use the pump as a fixed point (support) for the plumbing.*

Plumbing Installation

CAUTION: *When using 6" pipe, install 6" x 4" reducer bushings as close to the jet housing(s) as possible. For systems with 2 or 3 jet housings, install the 6" x 4" reducer bushings as close to the 4" manifold tees as possible. The 6" suction and discharge lines should be run from the jet housing(s) and remain under the water line to a point directly beneath the pump(s). Install 6" elbows at that point. Then run 4" pipe vertically up to the suction and discharge connections of the pump and finish with a 4" elbow.*

- For optimal performance, use 4" plumbing when the total distance between the pump and jet housing is 30 ft or less. The plumbing should be as direct and free from turns or bends as possible because **elbows and other fittings can create large friction losses and reduce the performance of the system. The shortest length of pipe with the minimum number of fittings possible should be used to avoid any significant friction loss due to the pipe and fittings.** *NOTE: Refer to Figure 2 for the BaduStream head loss curve.*

- A maximum of seven (7) 90° elbows may be used with 30 ft of horizontal 4" pipe for the suction line and 30 ft of horizontal pipe for the discharge line without negatively affecting the performance of the system.
  NOTE: This applies to each individual pump used on the system. Refer to Figure 4 for the maximum TDH allowed to achieve recommended flow rates.

- If more elbows are required for the installation, 4" sweeps must be used in place of the elbows. When using sweeps instead of elbows, a maximum of nine (9) 4" sweeps may be used with 30 ft of horizontal 4" pipe for the suction line and 30 ft of horizontal 4" pipe for the discharge line without negatively affecting the performance of the system. *NOTE: This applies to each individual pump used on the system. Refer to Figure 4 for the maximum TDH allowed to achieve recommended flow rates.*

- If the pump(s) cannot be located within 30 ft of the jet housing(s) using the maximum number of 4" elbows or sweeps stated above, then 6" plumbing must be used. For the suction and discharge lines, use 6" plumbing and fittings from the connection at the jet housing (or at the manifolds for two and three jet systems) to a point directly beneath the pump. From that point, install a 6" elbow. Then run 4" pipe vertically up to the suction and discharge connection of the pump and finish with a 4" elbow.

- For two and three jet systems, the jet housings **must be installed as close to 10" center to center as possible for maximum performance. DO NOT install the jet housing more than 12" apart on center.** *(See Figure 1 & 1A)*

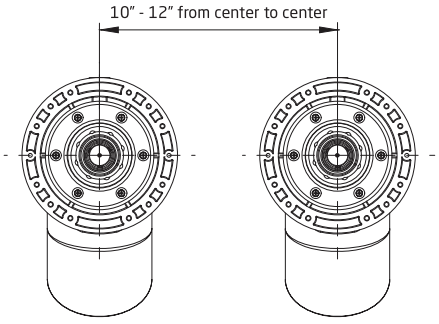

Figure 1
Two Jet (10" - 12" from center to center)



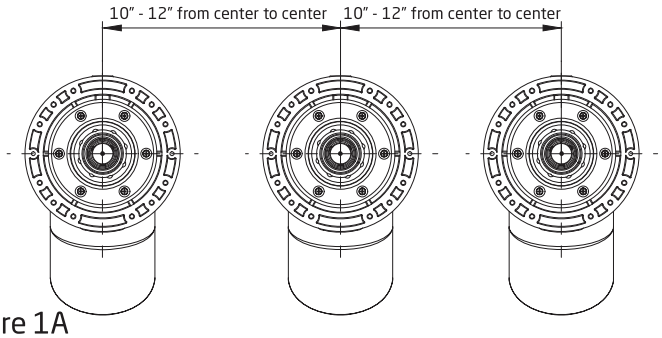

Figure 1A
Three Jet (10" - 12" from center to center)

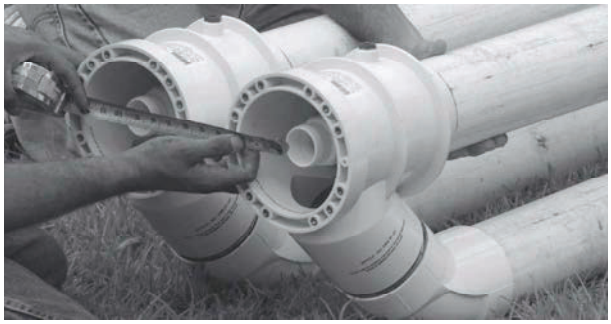

Plumbing Installation - continued

NOTE: Suction lines which are too long have significant disadvantages:

- Higher resistance which results in less efficient priming and a higher risk of cavitation.
- Longer priming time (up to 12 min).
- Keep the suction and pressure lines as short and straight as possible.
- If the pump is positioned further away, then the pipe dimensioning has to be adapted so that almost loss-free flowing is ensured.

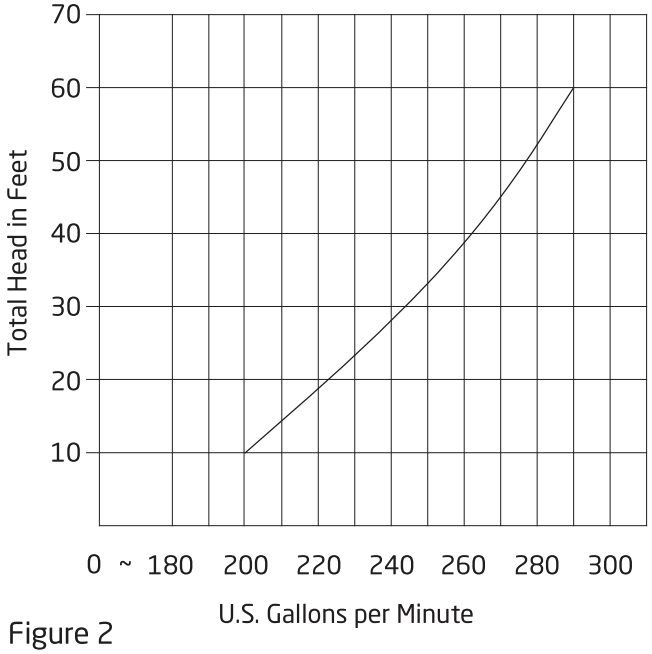

Figure 2
BaduStream II Head Loss Curve *(Single Jet Housing)*

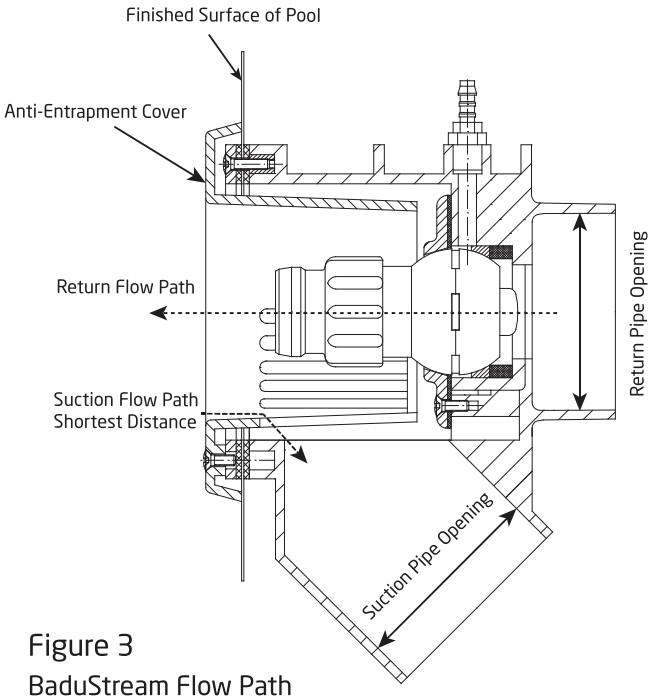

Figure 3
BaduStream Flow Path

NOTE: The BaduStream assembly package contains all necessary parts for the installation of the unit into concrete, gunite, liner or fiberglass pools.

CAUTION: *All necessary screws and bolts included with the BaduStream are stainless steel. ALL screw threads and threaded inserts are METRIC! ONLY METRIC bolts and nuts may be used! The two exceptions are the suction and discharge connections on the BaduStream and pump housing (4" slip connections) and the mounting hardware for the air regulator assembly (1/4 -20 threads). All screws should be HAND TIGHT.* ***DO NOT*** *use drills or pneumatic tools.* ***DO NOT*** *over tighten!*

Plumbing Requirements

BaduStream *II*	Pump	Distance	Pipe Size	Approx. Flow	TDH
Three Jets	(2) 4 HP	10 to 30 ft. up to 50 ft.*	4" 6"	651 GPM 651 GPM	42 ft 42 ft
Two Jets	4 HP	10 to 30 ft. up to 50 ft.*	4" 6"	380 GPM 400 GPM	34 ft 32 ft
One Jet	4 HP	10 to 30 ft. up to 50 ft.*	4" 6"	217 GPM 217 GPM	53 ft 53 ft
One Jet	3 HP	10 to 30 ft. up to 50 ft.*	4" 6"	200 GPM 200 GPM	12 ft 12 ft

Plumbing Installation - continued

** 6" pipe will allow distances of well over 50 ft. There is 50ft of cable included with the push button. If a longer distance to the control box is required, a junction box can be installed above the water line to splice additional cable as required or you may purchase a 100 ft. button (part# 2336002800B).*

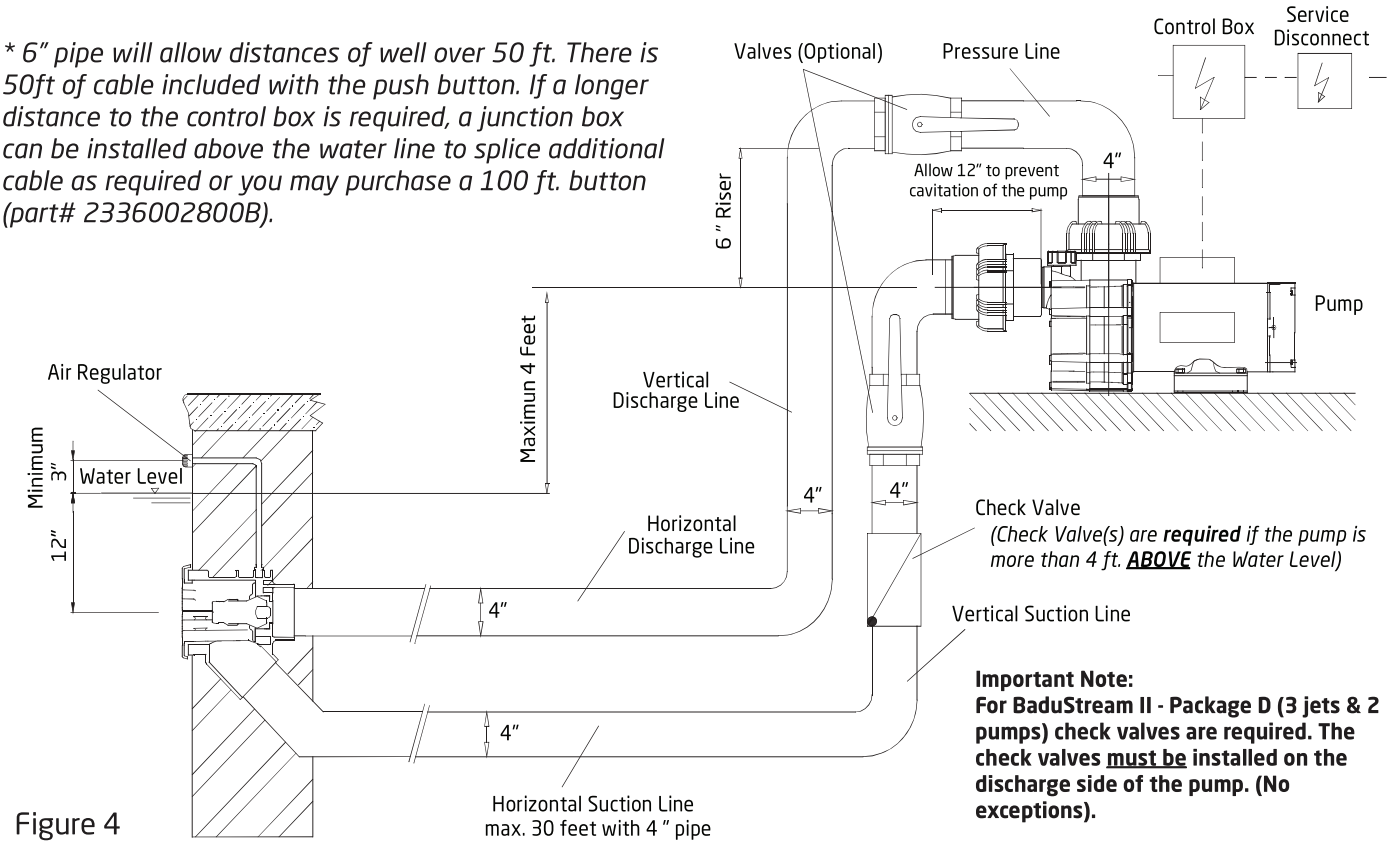

Important Note:
For BaduStream II - Package D (3 jets & 2 pumps) check valves are required. The check valves must be installed on the discharge side of the pump. (No exceptions).

Figure 4

NOTE: Valves are recommended when pump is installed below water level (flooded suction applications).

NOTE: To avoid stress on the jet housing, the jet housing and 2 to 3 inches of plumbing stub out may be encased in gunite or concrete.

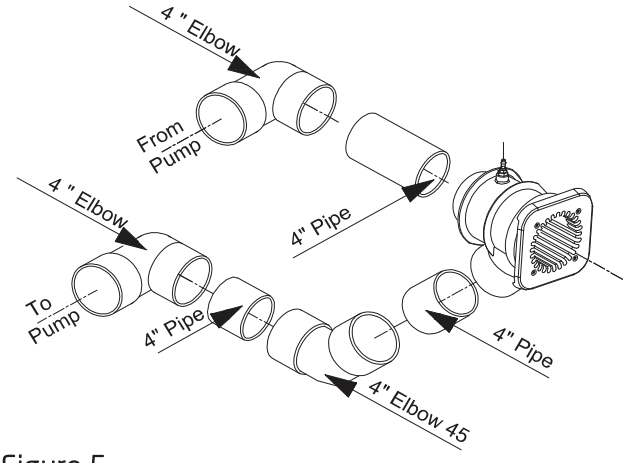

Figure 5
BaduStream ***Single*** Housing Installation



Plumbing Installation - continued

*NOTE: (For **Dual** Jet Installation) Increase the pipe size to 6" when jets are more than 30 ft. from the pump. Use 6" x 4" bushings after 4" manifold tees.*

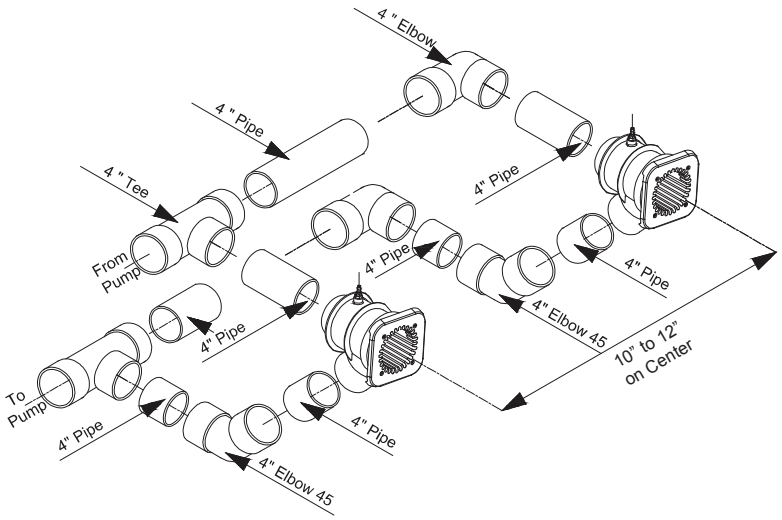



Figure 6
BaduStream ***Dual*** Housing Installation

Plumbing installation for the BaduStream ***Package D (system include three jet housings & two pumps)***

*NOTE: **(Three Jet Installation)** Increase the pipe size to 6" when jets are more than 30 ft. from the pump. Use 6" x 4" bushings after 4" manifold tees.*

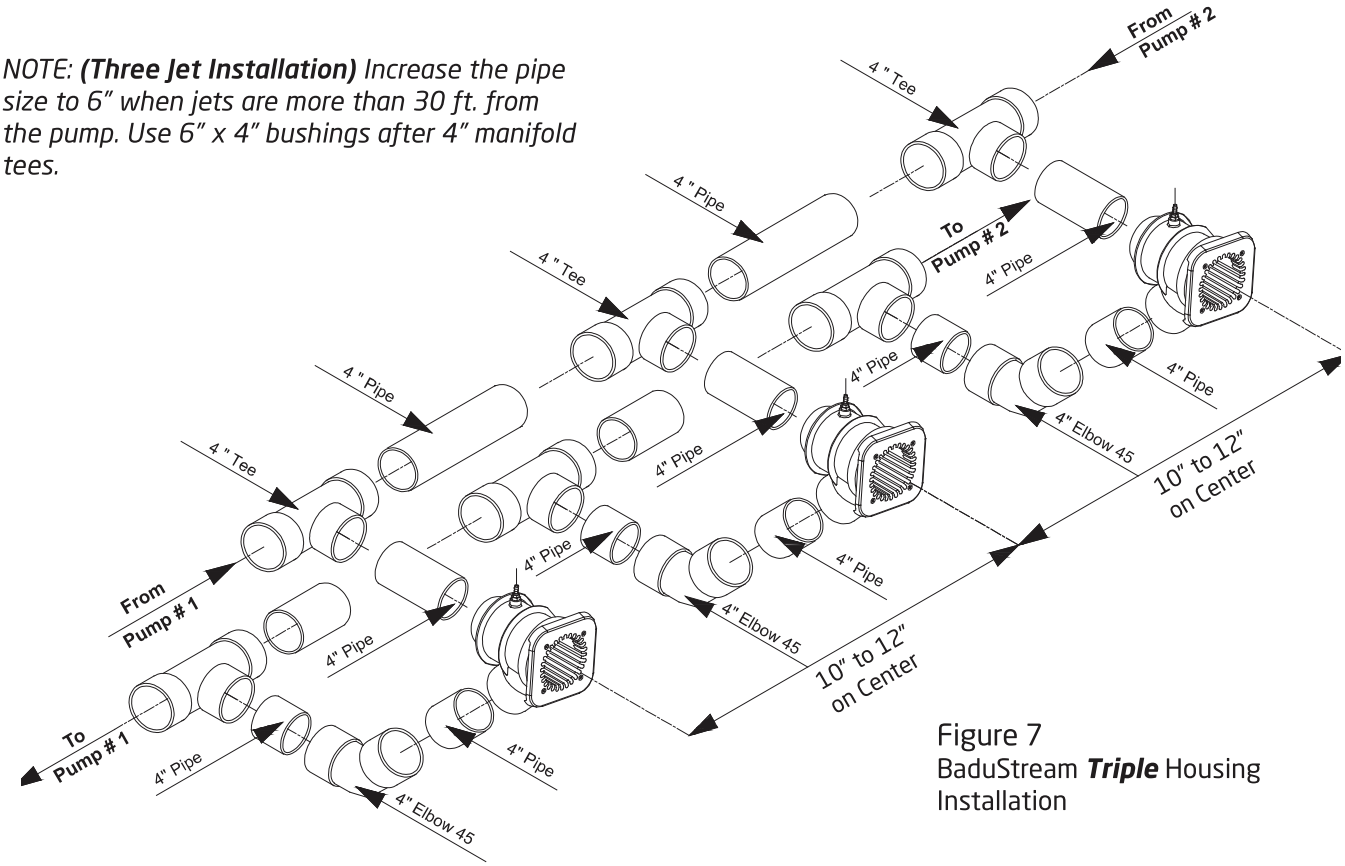

Figure 7
BaduStream ***Triple*** Housing Installation

*IMPORTANT NOTE: **CHECK VALVES <u>MUST BE</u>** used on the discharge side of each pump. Minimum 4" pipe between pump and BaduStream plumbing manifold.*

Plumbing Installation - continued





Figure 8
Check Valves Installed for a Package D (three jet & 2 pump system)

Concrete or Gunite Installation

*NOTE: The following parts **ARE NOT USED IN A GUNITE or CONCRETE INSTALLATION**:*

- Clamping Ring Gasket (*Part #12)*
- 1/4-20 x 1-1/2" Bolt (*Part #18)*
- 1/4-20 Nut (*Part # 19)*
- 1/4" Washer (*Part #20)*
- Air Regulator Gasket 60 x 11 x 2 mm (*Part #21)*
- #14 x 1" Screw (*Part #27)*

1. Pre-plumb BaduStream jet housing(s):

A. Install plumbing manifold (for two and three jet systems) or approximately 12" of 4" SCH 40 pipe (for single jet systems) to both suction and discharge fittings on the jet housing(s). *See Figure 9*

B. Thread one (1) air regulator hose nipple into the top of each jet housing. Secure plastic air regulator hose *(part #15)* to the air regulator hose nipple(s) *(part #14)* using the hose clamp(s) *(part #16)*.

2. Tape the jet housing(s) to keep concrete out of threaded inserts and out of the inside of the housing(s). *See Figure 10.*

3. Place the jet housing(s) between the steel rebar. ***Note: The jet housing location is very important.***

A. Make sure that the air regulator hose nipple *(part #14)* is at the top and center of each jet housing. ***Failure to do so will result in the square cover (part #8) appearing uneven.***

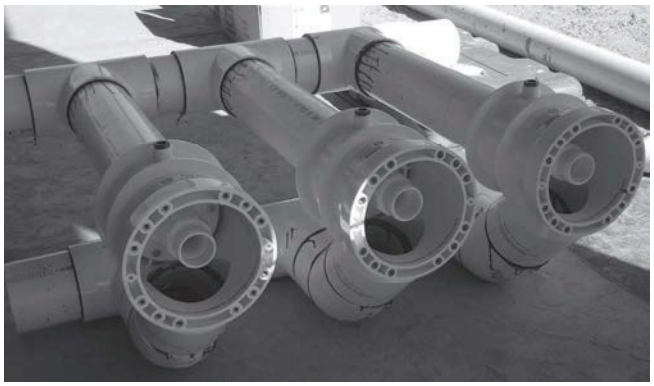

Figure 9
Pre-Plumbed Jet Housings



Figure 10
Taped Jet Housings

Concrete or Gunite Installation

B. The center of each jet housing *(the nozzle)* must be located **12" BELOW** the water line for maximum performance and efficiency.

C. Recheck the location of the jet housing while applying gunite or pouring concrete. Make sure the jet housing remains properly aligned and level.

D. Front edge of each jet housing should finish even with inside finished pool wall. Scrape out a V-shaped groove around the jet housing, approximately 1.5" deep to allow marcite to seal against the jet housing. *See Figure 11.*

E. To avoid stress on the housing, the jet housing and 2 to 3 inches of plumbing stub out may be encased in gunite or concrete. ***Caution:*** *Too much stress on the plumbing may crack the BaduStream II housing.*



Figure 11
V-Shaped Groove in Gunite

4. Install the air regulator. *NOTE: Air regulator location should be 3"- 4"* ***ABOVE*** *the water level.*

A. Thread one (1) air regulator hose nipple *(part #14)* into the back of the air regulator holder *(part #17).* Connect the free end of the plastic air regulator hose to the nipple on the back of the air regulator holder. Secure with a hose clamp *(part #16).*

B. The air regulator can be located in the tile above the water level or in the deck. When tiling the pool, adjust the air regulator location so it is 3"-4" **ABOVE** the water level. Place and set with hydraulic cement. The air regulator holder *(part #17)* should finish flush with the inner pool wall. Drill a 1/2" hole in the tile line even with the center hole of the air regulator holder. Tile over the air regulator holder. ***CAUTION:*** ***DO NOT*** *plug the center hole of the air regulator holder.*

C. Insert the M10 x 80 mm brass screw *(part #24)* through the bottom part of the air regulator *(part #23),* the 42 x 11 x 2 mm and the air regulator gasket *(part #26).* Thread the M10 x 80 mm brass screw into the center of the air regulator holder *(part #17).* Tighten with a flat head screw driver.

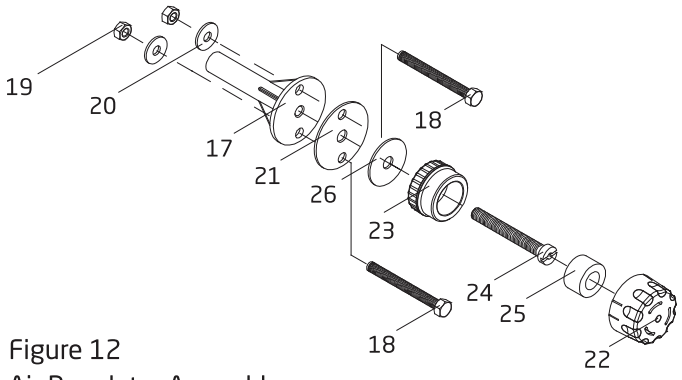

Figure 12
Air Regulator Assembly

D. Install the hose ring *(part #25)* and snap the top part of the air regulator *(part #22)* into place. *See Figure 12 for air regulator assembly.*

5. Keep all parts not being used now in original box. Store in a safe place until needed.

NOTE: An extension ring and longer square cover screws (part #9/5) are available (upon request) for applications where the housing is recessed into the pool wall.

6. Once the concrete or gunite is fully cured and pool wall is completed, install the square cover *(part #8)* using the four (4) M6 x 25mm square cover screws *(part #9/1).*

NOTE: In tile installations, the tile thickness can be compensated for by first installing the clamping ring gasket (part #12) and clamping ring (part #3) before installing the square cover. The clamping ring and clamping ring gasket are installed using the eight (8) clamping ring screws (part #9/2, 9/3, or 9/4).

Concrete or Gunite Installation - continued

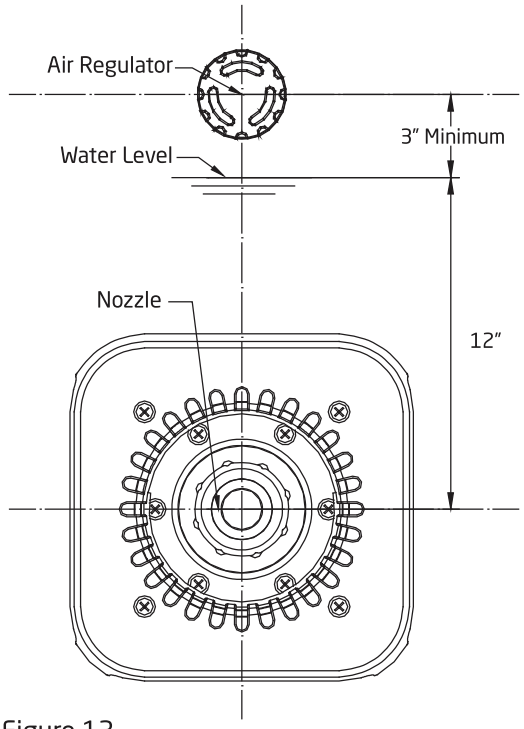

Figure 13
Installation in Concrete or Gunite Pools

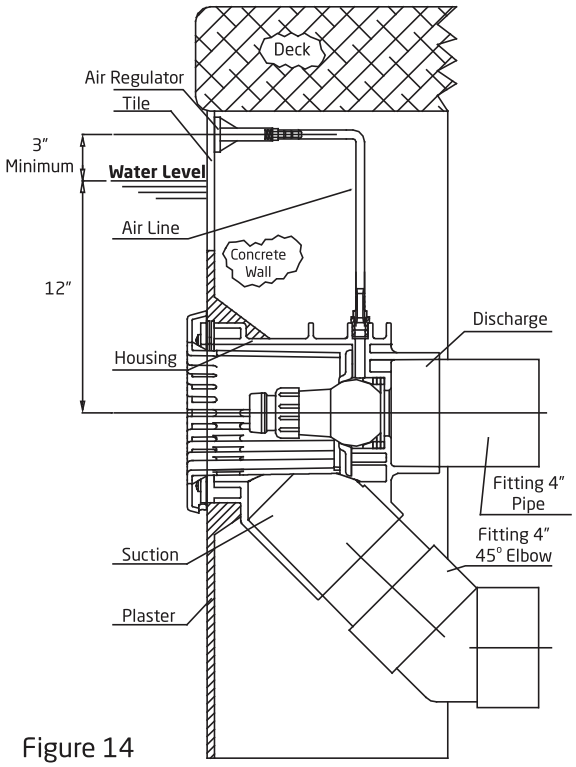

Figure 14
BaduStream in Concrete or Gunite Pool.

Liner and/or Fiberglass Pool Installation

1. Using the clamping ring *(part #3)* as a template, drill holes in the pool wall for installation. The center line of the clamping ring should be 12" **BELOW** the water level *(See Figures 15 & 16).* Two additional holes will need to be drilled at the 3 and 9 o'clock positions for installation of the jet housing *(part #7).* The four brass inserts in the clamping ring should be at the 2, 4, 8 and 10 o'clock positions *(See Figure 15).*

2. Mount the housing *(part #7)* and one clamping ring gasket *(part #12)* on **BEHIND** the pool wall using two (2) #14 x 1" counter sunk screws *(part #27).* Install the screws from the inside of the pool wall through the holes drilled at 3 and 9 o'clock positions. *(See Figure 15)*

3. Install the clamping ring *(part #3)* and a second clamping ring gasket *(part #12)* in **FRONT** of the pool wall using eight (8) M6 screws *(part # 9/2, 9/3, or 9/4).* Screw lengths vary depending on the installation. *NOTE: A good RTV silicone may be used with the gasket when mounting the jet housing, but in most cases is not necessary. Installer should decided whether or not the silicone is necessary.*

NOTE: When installed properly, the center of the housing (part #7) will be 12" **BELOW** the surface of the water and the air regulator hose nipple *(part #14)* will be at the top center of the jet housing.

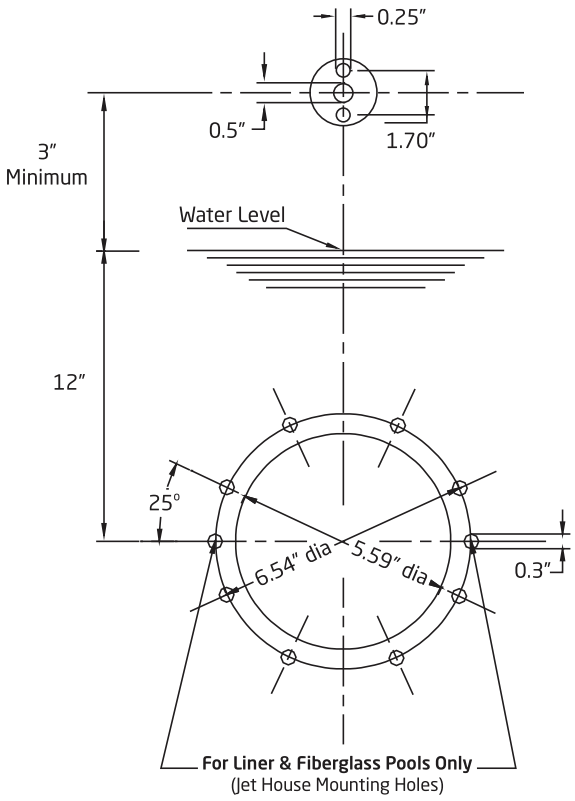

Figure 15
Cutout Pool Wall for BaduStream housing.

Liner and/or Fiberglass Pool Installation - continued

CAUTION: When installing the BaduStream Cover (part #8). Use a Phillips head screw driver and tighten to 1.5 Nm or hand tight. **DO NOT** use electrical or air drills. *(NOTE: The square cover, part #8, will have an uneven appearance if the housing is not installed properly.)*

4. For the air regulator assembly, one 1/2" hole must be provided, preferably along the vertical axis, approximately 3-4" **ABOVE** the water line. *(See Figures 15 & 16)*. Using the 60 x 11 x 2mm air regulator gasket *(part #21)*, mark and drill two 1/4" mounting holes *(See Figure 15).* Use the two (2) 1/4 - 20 air holder screws *(part #18)* and two 1/4-20 air holder nuts *(part #19)* to mount the air regulator holder.

NOTE: Part #18 & Part #21 go in FRONT of the pool wall; Part #19 & Part #17 go BEHIND the pool wall.

5. Keep all parts not being used now in original box. Store in a safe place until needed.

6. Once the pool is complete, install the square cover *(part #8)* using the four (4) square cover screws *(part #9/1).*

For Liner Pools Only: Install the jet housing and air regulator prior to installation or replacement of the pool liner.

For Steel Walled Pools: An optional butterfly gasket *(part #12.1)* maybe purchased to replace the two (2)clamping ring gaskets *(part #12)*. Increase the jet housing hole in Figure 15 from 5.59" to 5.75" for installation.

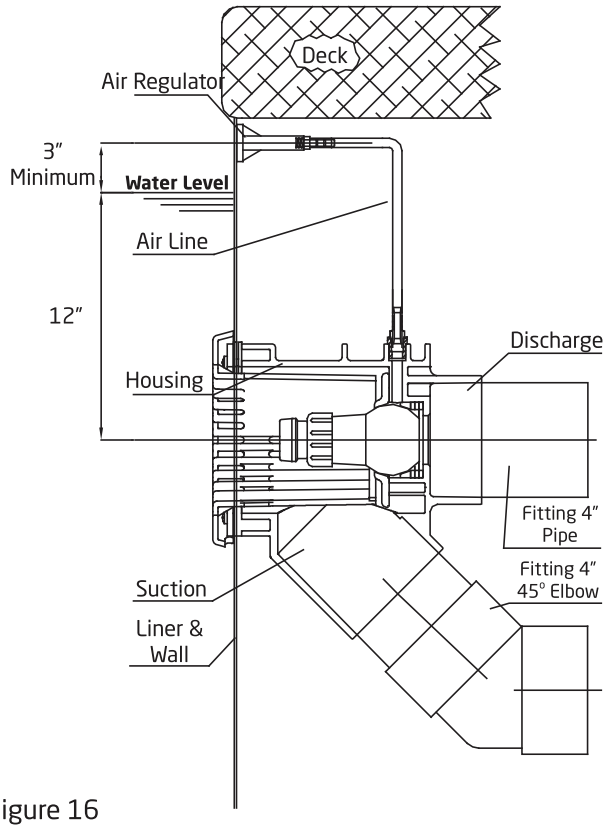

Figure 16
BaduStream in Liner or Fiberglass Pool.

Removal of Liner

When replacing liner or removing liner for repairs; remove the four (4) screws *(part #9/1)* which hold the square cover *(part #8)* to the jet housing. Remove all screws *(part #9/2, 9/3 & 9/4)* except the top two, which hold the clamping ring *(part #3)* and gasket *(part #12)* to the jet housing. Back out the two remaining screws approximately halfway and check for any movement of the jet housing from the wall. *(NOTE: If the two counter sunk screws (part #27) which hold the jet housing to the wall were installed, the jet housing should not move, and the two remaining screws can be removed.)* Remove one of the remaining two screws and slide the clamping ring *(part #3)* to the side. Replace all the screws before removing the last screw. Remove or replace the liner. Reverse the process to install liner.

NOTE: When replacing the clamping ring and screws: locate screw heads under liner, make a small cut on the liner at the screw heads and push the liner over the screw head.

Electrical - SPECK Controller Installation

WARNING: *The wiring of the pool motor and control box should be done by a licensed electrician in accordance with all local, state, and federal codes. Be certain that the motor frame and control box are properly grounded. Motor name plate lists voltage, phase, amp draw, and other information as well as wiring connection instructions.*

This section concerns the electric motor and control box for BaduStream II swimjet system.

CAUTION: *Before installing the Speck Pump, read the entire pump owner's manual found in the pump box.*

Consult local codes for minimum distance between pump and pool. Locate pump as close to the pool as practical.

CAUTION: *There is 50ft of cable included with the push button. If a longer distance to the control box is required, a junction box can be installed above the water line to splice additional cable as required or you may purchase a 100 ft. button (part# 2336002800B).*

NOTE: The System ON/OFF LED push button is installed in a 1-1/2" threaded housing. This housing may be installed in any 1-1/2" return fitting, either below the water line or above the water.

BONDING: As required by National Electrical Code, the pump motor must be electrically bonded to the pool structure (reinforced bars, etc.) by a solid copper conductor not smaller than No. 8 AWG via the external copper bonding lug on the pump motor.

GROUNDING: Permanently ground the pump motor and control box using a conductor of appropriate size.

- **Pump Motor:** Connect to the #10 green headed ground screw provided inside the motor terminal box.
- **Control Box:** Connect to the aluminum grounding terminal strip on the inside of the control box enclosure.

CAUTION: ***DO NOT*** *connect to electric power supply until the unit is permanently grounded.*

NOTE: Single phase control boxes equipped with GFCI are shown on pages 17-18. Other options are available. Please contact the factory (800) 223-8538 for assistance.

Connecting the SPECK controller to a WiFi network for the FIRST TIME:

1. Before connecting the SPECK controller to the WiFi network, stand where the SPECK equipment is located and with your mobile device in-hand assure that the signal strength to the WiFi network is good to excellent *(weak signals will cause problems).*

2. Make sure the power to the SPECK Device is turned ON. There is a green indicator on the controller board to indicate power. A small "o" will be flashing on the LED display.

3. Give the homeowner the BADU*Connect* app manual and allow them to finish the App setup. *For more information, Call (800) 223-8538 or visit www.baduconnect.com for additional copies of the BADUConnect App instructions.*

Figure 17
Control Box Wiring

Power from main panel (230 VAC):
Neutral, Line 1, Line 2

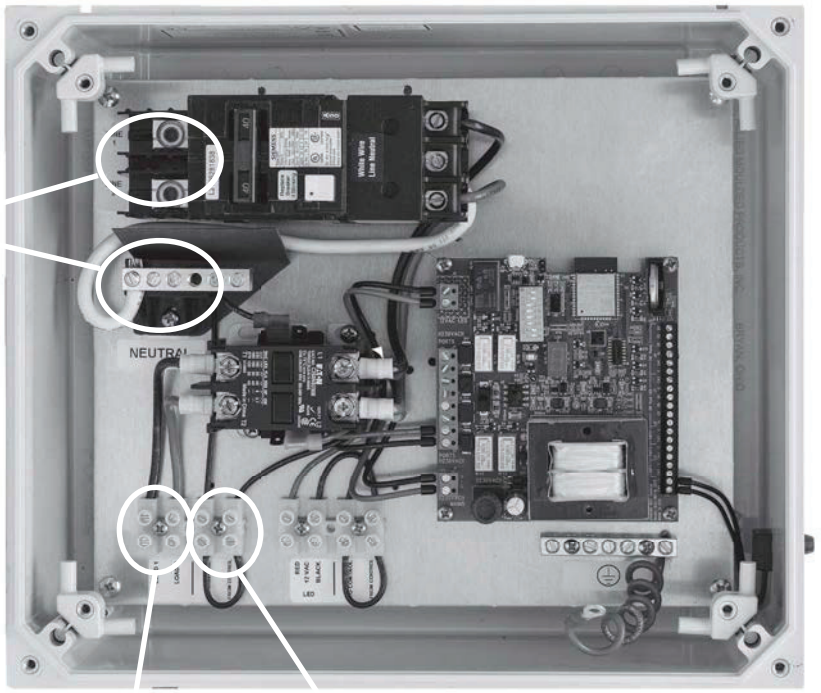

Power to pump motor (230 VAC):
Load 1, Load 2

Connection for remote relay
(Remove Jumper)

Contact MFG for wiring instructions.

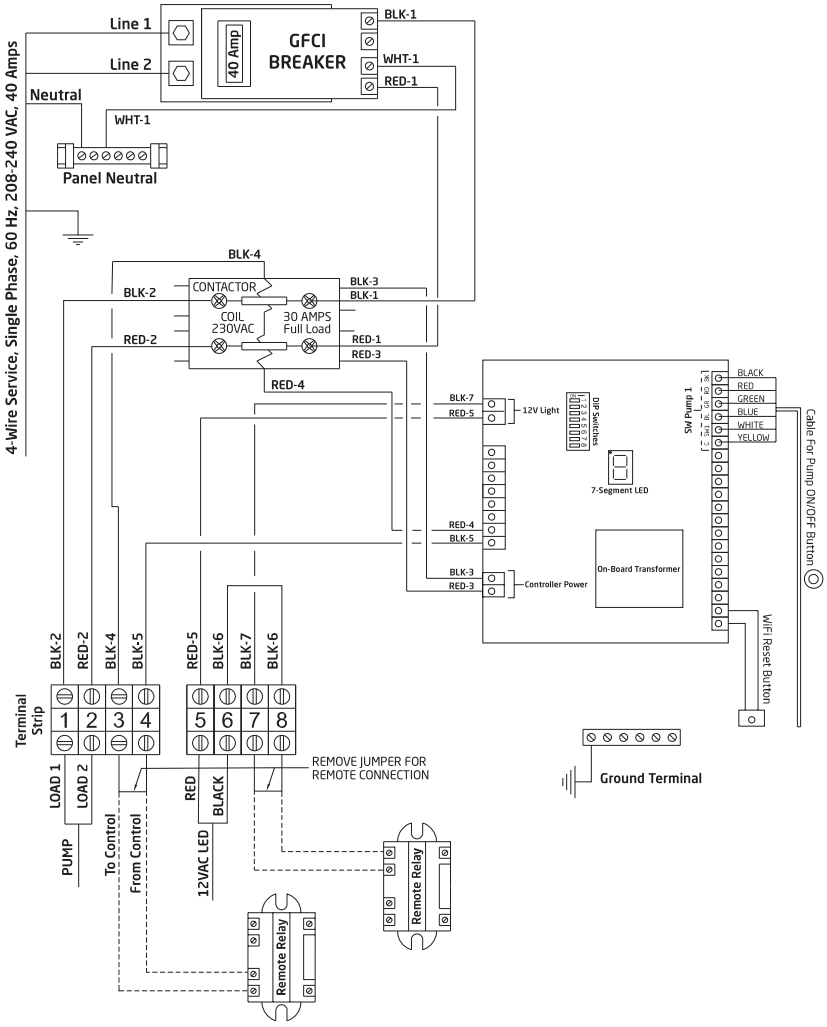

Figure 17A
Control Box Wiring

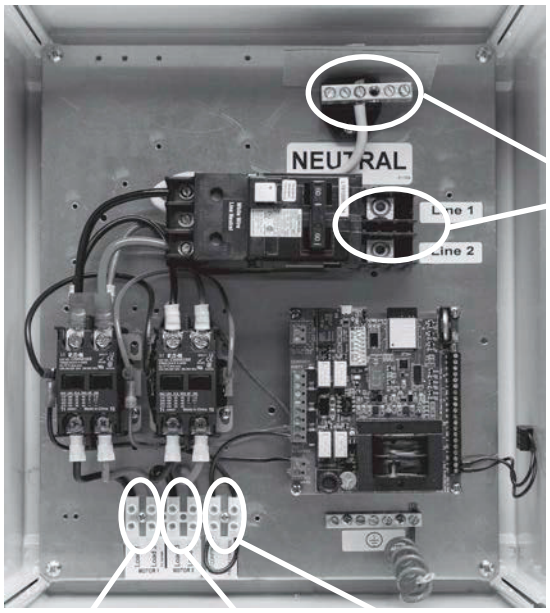

Power from main panel (230 VAC): Neutral, Line 1, Line 2

Power to pump motor 1 (230 VAC): Load 1, Load 2

Power to pump motor 2 (230 VAC): Load 3, Load 4

Connection to remote relay (120 VAC)
Contact MFG for wiring instructions.

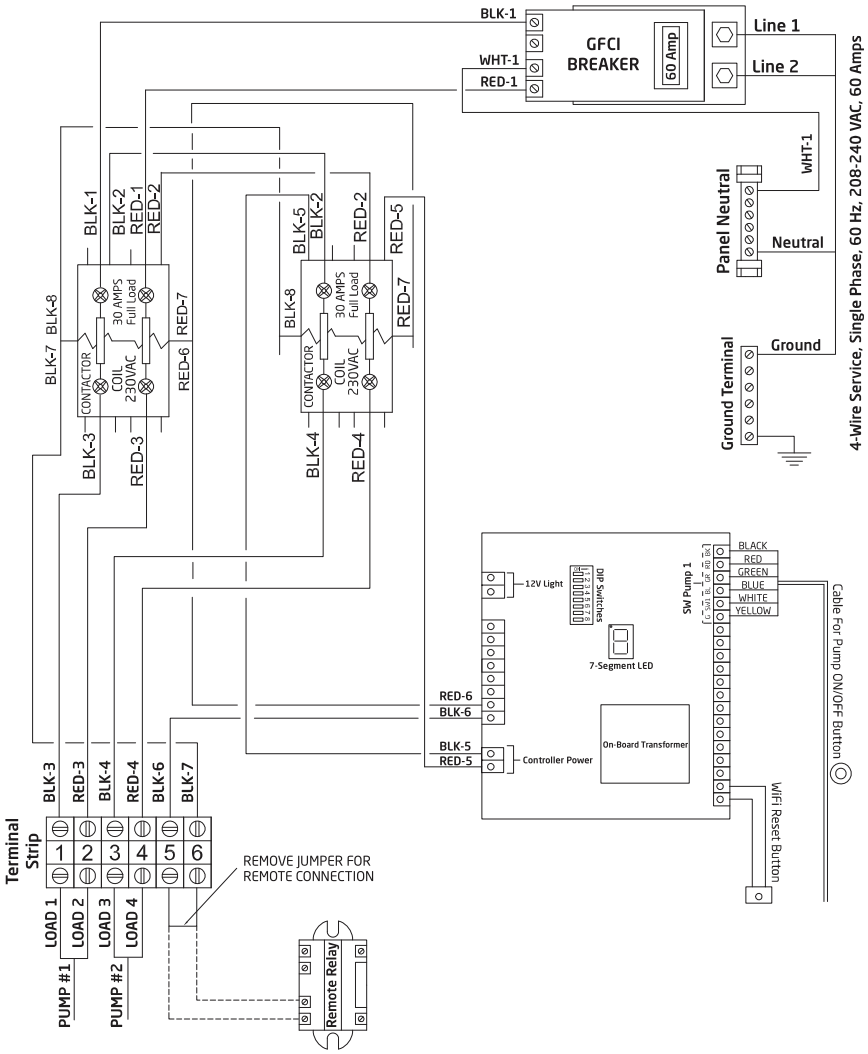

Table 1
LED Push Button Color Codes

COLOR	MEANING
Solid BLUE	SwimJet System is OFF
Flashing GREEN every 1 second	SwimJet System is ON with 2 hour timer
Flashing GREEN every 1/2 second	This is a 2 minute warning on the 2 hour timer. Once the 2 minutes have passed the swimjet system will automatically turn OFF.

Table 2
LED Codes & Meanings

PATTERN ON LED DISPLAY	CONDITION
Flashing Dash (-) with an interval of ~200ms	Ideal with no Relay/Pump on
Flashing 'P' with the interval of ~200ms	No WiFi connection, Wrong Wifi Password
Flashing 'O' (Capital O) with an interval of ~200ms	No cloud connection due to server down or no internet
Flashing 'o' (Small o) with an interval of 200ms	Device has not been set up to connect to WiFi
Flashing '≡' (triple bars) with an interval of 200ms	The device is doing OTA Firmware update
Flashing 'E' with an interval of ~200ms	Hardware error
Flashing 'L' with an interval of ~200ms	Pool light error
Steady 2	Port 2 is on manually (No Timer/Schedule)
Steady 3	Port 3 is on manually (No Timer/Schedule)
Steady 4	Port 4 is on manually (No Timer/Schedule)
Steady 5	Port 5 is on manually (No Timer/Schedule)
Steady 1 with flashing dot. The dot will flash with an interval of ~100ms	Port 1 is on a schedule based on Time of Day.
Steady 2 with flashing dot. The dot will flash with an interval of ~100ms	Port 2 is on a schedule based on Time of Day.
Steady 3 with flashing dot. The dot will flash with an interval of ~100ms	Port 3 is on a schedule based on Time of Day.
Steady 4 with flashing dot. The dot will flash with an interval of ~100ms	Port 4 is on a schedule based on Time of Day.
Steady 5 with flashing dot. The dot will flash with an interval of ~100ms	Port 5 is on a schedule based on Time of Day.
Flashing 1 with the interval of ~100ms	Port 1 is on a countdown timer
Flashing 2 with the interval of ~100ms	Port 2 is on a countdown timer
Flashing 3 with the interval of ~100ms	Port 3 is on a countdown timer
Flashing 4 with the interval of ~100ms	Port 4 is on a countdown timer
Flashing 5 with the interval of ~100ms	Port 5 is on a countdown timer
Blue light is ON	LED Push Button: When Port 1 or 2 is OFF
Green-light is ON	LED Push Button: When Port 2 is ON in manual mode
Green light is Flashing 1 second interval flashing when time remaining is more than 2 minutes otherwise flashes with 0.5 second	LED Push Button: When Port 1 or 2 is ON in Timer or schedular mode
Red light is flashing	LED Push Button: When there is an error with the Swimjet Light (Port 2)

4 Service and Maintenance

Nozzle Adjustment

The BaduStream System is provided with a set of nozzle adjustment tools. These tools will allow the user to set the jet nozzles into position for optimum performance.

When setting the nozzles for basic swimming, it is recommended that you set the nozzles in such a way that each nozzle intersects 4 feet away while breaking the surface at the same time. To help set the nozzles in position for best performance, please follow these instructions:

2 Jet System:
1. Extend the nozzle adjustment tool to full length.

2. Place one nozzle adjustment tool into the center jet nozzle, bring the blue nozzle tool so it is straight out and tilted up, so the end of the tool breaks the surface of the water and leave tool in the jet.*(See Figure 16)*

3 Jet System:
1. Extend the nozzle adjustment tool to full length.

2. Place one nozzle adjustment tool into the center jet nozzle, bring the blue nozzle tool so it is straight out and tilted up, so the end of the tool breaks the surface of the water and leave tool in the jet. *(See Figure 16A)*

3. Place the second tool in the left side jet, move the tool so that the end touches the end of the tool left in the center jet where it breaks the surface of the water.

4. Repeat step 3 for the right-side jet using the same tool used on the left jet.



Nozzle Adjustment Tools

NOTE: Though the nozzle adjustment tools are designed for outdoor use, it is advised to protect them from continuous direct heat.

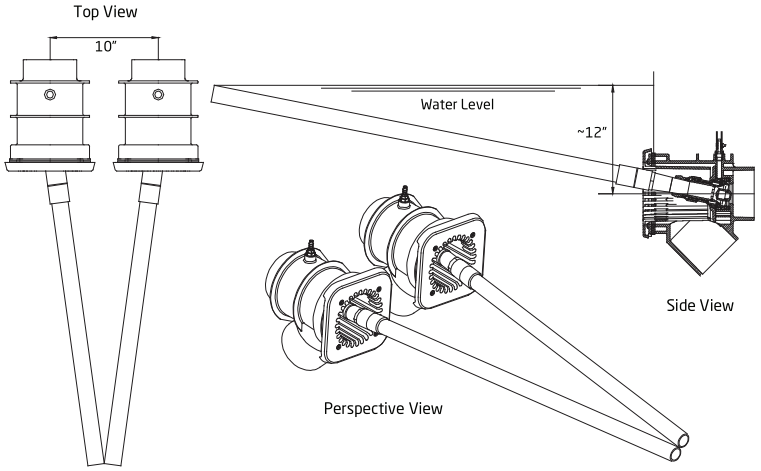

Figure 16
2 Jet System Nozzle Adjustment

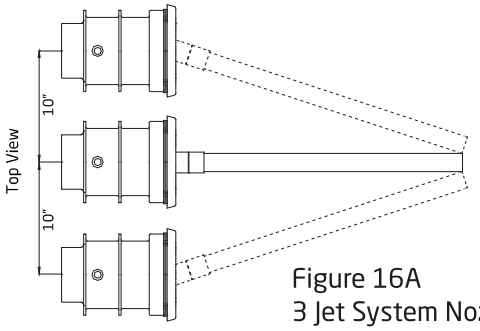

Figure 16A
3 Jet System Nozzle Adjustment

Winterizing

In areas subject to freezing water temperatures, you should protect your equipment. We recommend you purchase a winter cover kit part #2308752006K. This kit includes one (1) winter plate, one (1) gasket and four (4) screws.

Also, you can protect your swimjet system as follows: Drain pool until water level has dropped below the anti-entrapment cover. Then protect pump by removing drain plug and red filler plug (or lid).

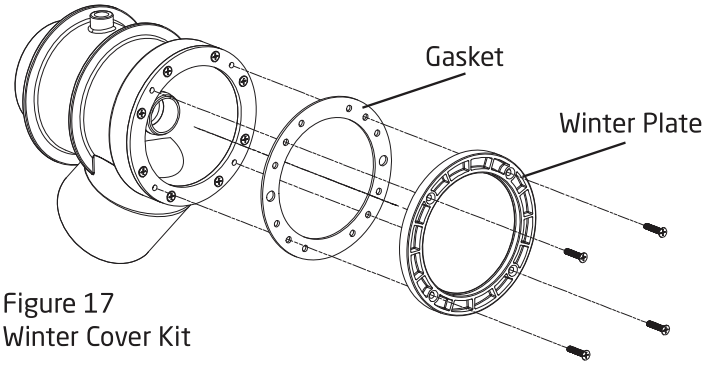

Figure 17
Winter Cover Kit

5 Frequently Asked Questions

How is the current generated?
The pump generates up to 400 GPM coming out of two (2) jet nozzles at 27 ft. per second and 36 ft. per second thru one (1) nozzle creating a swim current in excess of 5700 GPM, measured 6 ft. from the jet.

What size pool do I need?
The BaduStream can be installed in any size pool. However, we recommend a minimum length of 15 ft. and a minimum width of a 8 ft. swimming lane.

What size plumbing is necessary? How far away from the BaduStream can the pump be installed?
Use 4" plumbing up to 30 ft. For runs longer that 30 ft. use 6" plumbing. The pump should be placed as close to the BaduStream as local codes will allow. See plumbing installation on page 8 for more details.

How many amps does the pump operate at?
4.0 HP: Maximum 21.0 - 19.4 amps @ 208-230 V
3.5 HP: Maximum 15.2 - 14.0 amps @ 208-230 V

What size breaker do I need?
You must use a 40 amp breaker for the 4 HP pump or 30 amp breaker for the 3 HP pump to avoid nuisance tripping. A 60 amp breaker is required for three jets and two pumps system.

Is the BaduStream approved?
Yes. The BaduStream swim jet system is listed by MET, UL and complies with UL standard 1563 Swimming Pool Equipment, ASME standard A*NSI/ASME A112.19.8 (ANSI/APSP-16, 2011)* Standard for Swim Jet Combination Fittings, and is VGB 2008 compliant.

Do the covers come in different colors?
Yes. The round covers can be ordered in gray or black. The square cover is only available in black or white.

Does the air regulator come in different colors?
Yes. The air regulator can be ordered in black.

Does it matter if the housing is installed higher or lower than the manual states?
Yes, the center of the jet must be 12" **BELOW** estimated water level for proper performance of unit.

Can the air regulator be placed elsewhere?
Yes, as long as it is not continuously flooded with water.

Can the pump be placed below water level?
Yes. However, for best performance we recommend ordering a pump for flooded suction (Model 21-80/33G) instead of self-priming (Model 21-80/33GS). We recommend installing valves for ease of maintenance.

How far away can the LED push button function properly?
The LED push button will work as far as needed. However, only 50 ft. of cable is provided. Larger runs will require splicing at a junction box or purchasing the 100' cable button.

Do I need to install a motor starter?
In most case, no. All single phase pumps have built-in thermal overloads. Also, the three phase Model 21-80/33 has built-in thermal overload. Other three phase pumps require a motor starter.

Should this be tied into my filter system?
No. The swim jet system and the filter system should not be plumbed together as they each provide very specific functions.

Can I use with automated controls?
Yes. It comes with the ability to tie into automated control systems or other switching devices.

Trouble Shooting

PROBLEM	POSSIBLE CAUSES	SOLUTION
1. Pump will not prime.	a. Suction air leak.	Make sure the red filler plug and o-ring are clean and properly positioned. Tighten red filler plug. Tighten all pipes and fittings on suction side of the pump. Be sure water in the pool is high enough to flow through the jet housing.
	b. No water in pump.	Make sure pump housing is full of water.
	c. Closed valves or blocked lines.	Open all valves in system. Open pump and check for clogging of impeller.
	d. Low voltage to motor.	Check voltage at motor. If low, pump will not come up to speed.
2. Motor does not turn.	a. No power to motor.	Check that all power switches are on. Be sure fuse or circuit breaker is properly set. Check motor wiring at terminals.
	b. Pump jammed.	With power off, turn shaft. It should spin freely. If not, disassemble and repair.
3. Low flow.	a. No water in pump.	See problem 1.
	b. Closed valves or blocked lines.	
	c. Low voltage to motor	
4. Noisy operation of motor.	a. Bad bearings.	Check for noise when shaft is turned by hand. Motor will be very hot in bearing area when running. Replace bearing.
5. Motor runs hot.	These motors will run hot to the touch, however, this is normal. They are designed that way. Thermal overload protector will function to turn them off if there is an overload or high temperature problem. Excessive heat can be caused by:	
	a. Low voltage.	Increase size of electrical wire. Be sure motor is operating on correct voltage.
	b. Installed in direct sun.	Shield motor from sun's rays.
	c. Poor ventilation.	**DO NOT** block motor ventilation openings.
6. Noisy operation of pump.	a. Air leak in suction line.	Repair leak. Check suction pipe, red filler plug, and o-ring (See Problem 1).
	b. Restricted suction line due to blockage or under size pipe. Indicated by high vacuum reading at pump suction.	Remove blockage or increase suction pipe size. Are all suction valves fully open?
	c. Foreign matter (gravel, metal, etc.) in pump impeller.	Disassemble pump and remove foreign matter from impeller.
	d. Cavitation.	Improve suction conditions. (Reduce suction line length, reduce number of fittings, increase pipe size.)

Trouble Shooting - continued

PROBLEM	POSSIBLE CAUSES	SOLUTION
7. Motor overload protection "kicks out".	a. Motor is not connected properly.	Check wiring diagram on motor.
	b. Low voltage due to under size wire or low incoming voltage.	Check with volt meter. Increase size of supply wire. Report low supply voltage to power company. Voltage at motor must be within 10% of motor nameplate voltage.
	c. Wrong size heaters in protective device.	Heaters should be one size larger than full load amps shown on motor nameplate.
	d. Overload due to binding in pump or wrong size impeller.	Indicated by high amperage readings on motor, binding shaft. Disassemble unit and correct.
8. My ON/OFF LED push button is not working properly?	a. Control Box.	Check GFCI. If green LED does not stay ON, contact a certified electrician to diagnose control box components.
	b. Wiring.	Check the LED push button connections on the control box. Make sure the connections are tight.
9. The system will not turn OFF?	a. Control Box Components.	Press TEST button on the control box GFCI to turn off system. Contact a certified electrician to diagnose control box components.
10. I have adjusted the nozzles but the flow is weak?	a. Debris in pump casing/impeller.	Check inside pump casing for any debris.
	b. Improper swim jet assembly.	The internals may need to be removed for inspection.
11. The plastic cover is cracked.		To order contact the factory at 800-223-8538.

6 Product Specification

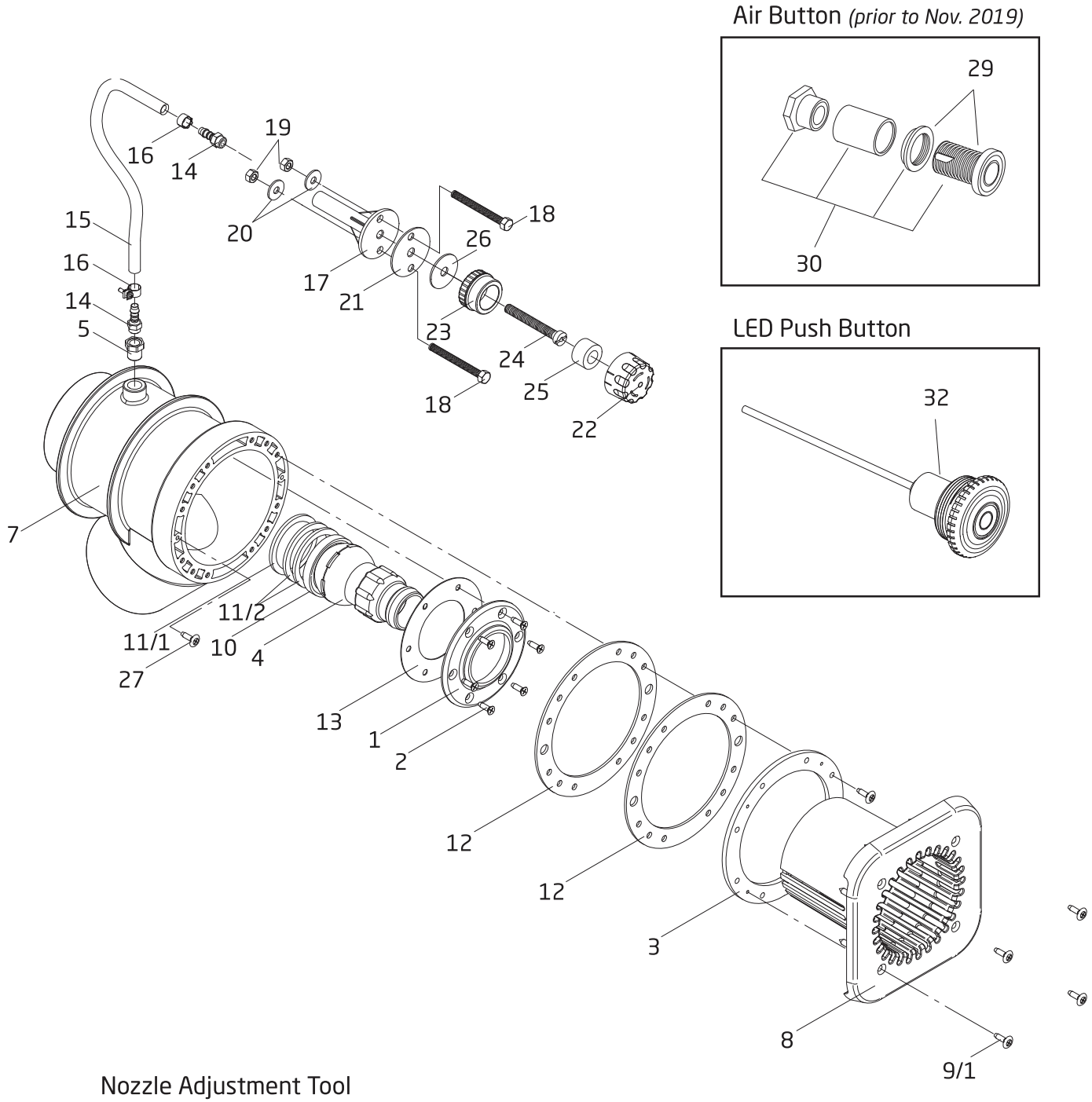

Nozzle Adjustment Tool

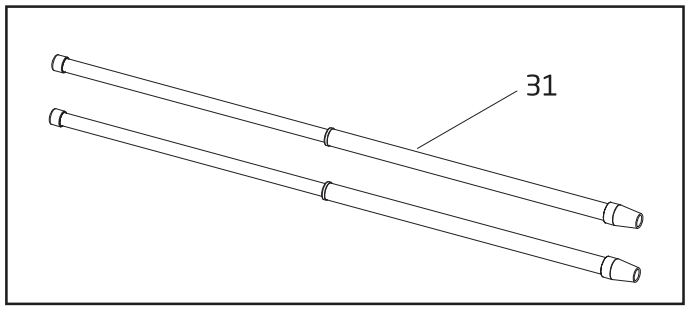

Replacement Parts

Order#	Drawing #	Qty Required	Description
2306002009	1	1	Face Ring - Nozzle
5879006021	2	6	Thread Cutting Screw - Face Ring K60 x 20 A2
2308762004	3	1	Ring - Clamping
2302002857	4	1	Nozzle - Adjustable Flow 40mm
2308761001A	5 & 7	1	Housing w/ Bushing Reducer 16 x 1/4"
2308750003	8	1	Cover - Square White
5879650625	9/1	4	Screw - Square Cover, Phillips/Pan M6 x 25mm
2991000077	9/2	8	Screw - Clamping Ring, Phillips Flat Head M6 x 20mm
5879650625	9/3	8	Screw - Clamping Ring, Phillips/ Pan M6 x 25mm
5879650640	9/4	8	Screw - Clamping Ring, Phillips/ Pan M6 x 40mm
2991000038	9/5	4	Screw - Sq.cover (Ext. Ring) Slot/ Pan M6 x 45mm
2302002056	10	1	Seat - Nozzle
2302002057	11/1	1	Spacer - Nozzle 6.2mm
2302002157	11/2	2	Spacer - Nozzle 4.0mm
2308750005	12	2	Gasket - Clamping Ring
2306002013	13	1	Gasket - Face Ring
2303004000	14-21	1	Holder w/ Hose Subassembly
2301001005	14	2	Nipple - Hose, Air Regulator, Plastic 1/4"
2301001007	15	1	Hose - Air Regulator, Plastic 8 x 3mm *(for single or three jet system)*
2301004001	15	1	Hose - w/ Y Fitting, Plastic 8 x 3mm *(for two jet system)*
2301001008	16	2	Clamp - Hose, Air Regulator 14/9 SS A4
2301001009	17	1	Holder - Air Regulator
2991000049	18	2	Screw - Air Holder, Slot/Pan 1/4-20 x 1-1/2"
2991000052	19	2	Nut - Air Holder, Hex Nut 1/4-20 SS
2991400024	20	2	Washer - Air Holder 1/4" SS
2301001013	21	1	Gasket - Air Holder 60 x 11 x 2mm
2301002000	22-26	1	Air Regulator (Sub-Assembly Complete) - White
2301002021	22	1	Top Part - Air Regulator - White
2301002022	23	1	Bottom Part - Air Regulator - White
2301002023	24	1	Screw w/ Hole - Air Regulator, Brass M10 x 80
2301002024	25	1	Ring - Hose, Air Regulator 16 x 30 x 18mm
2301002025	26	1	Gasket - Air Regulator 42 x 11 x 2mm
2991000059	27	2	Thread Cutting Screw - Jet Housing, Phillips/Pan 14 x 1
2304910010	Not Shown	1	Ring - Extension, Jet Housing (Flange)
2336002800A	32	1	50 ft. LED Push Button CPL - Pump

Order#	Drawing #	Qty Required	Description
2920280740	Not Shown	1	Control Box - BJC-7-GFCI-WIFI+CPB
2920280739	Not Shown	1	Control Box - BJC-7-GFCI-P2J3-WIFI+CP

Parts Below Are Unique to the BaduStream Shipped Prior to 11/2019

7400000026	29	1	#10 Air Button
7400000027	Not Shown	1	Air Tube 1/8" x 1' *(Price per ft) (50' needed)*
7400000062	30	1	Air Button w/ Concrete Adaptor

Optional Parts

2308752006K	Not Shown	1	Winter Cover Kit - Cover, Gasket & 4 Screws
2308750003B	8.1	1	Cover - Square Black
2308760004	Not Shown	1	Cover - Round White
2308760004B	Not Shown	1	Cover - Round Black
2308760004G	Not Shown	1	Cover - Round Gray
2301002000B	22.1 - 26	1	Air Regulator (Sub-Assembly Complete) - Black
2301002029	22.1	1	Top Part - Air Regulator - Black
2301002028	23.1	1	Bottom Part - Air Regulator - Black
2308750006	Not Shown	1	Butterfly Gasket - Clamping Ring
2300022010	Not Shown	1	Cap - Nozzle & Hand Grip, Close Off
2300003010	Not Shown	1	Massage Hose 5 ft. w/Pulsator & Hand Grip
2300003310	Not Shown	1	Massage Hose 15 ft. w/ Pulsator & Hand Grip
2308799007	31	1	Kit - Nozzle Adjustment Tool
2336002800B	32	1	100 ft. LED Push Button CPL - Pump

7 Limited Warranty

Product Registration

Thank you for purchasing a SPECK PUMPS® product please take a few moments to register it online. Your registration helps us keep you up to date on product information and offers.

Before you register:
What do I need to get started?

- The Serial Number and the Model Name
- An email address. We will use this to send you confirmation of your registration.
- A copy of your sales receipt and/or qualified installer's invoice.

To register your SPECK equipment please register online at www.usa.speck-pumps.com/register/

or

Scan QR code to register product

Limited Warranty

Speck Pumps-Pool Products, Inc. grants solely to the original consumer purchaser ("Buyer") of the BADU® SwimJet System(s)the following personal, non-transferable and limited warranty on the following terms and conditions (the "Limited Warranty"): the BADU SwimJet System(s) is warranted to be free of material defects in materials or workmanship under normal use for a period of one (1) year beginning on the date of the Buyer's purchase of the BADU SwimJet System(s) (the "Limited Warranty Period"). Not withstanding any provisions herein to the contrary, the warranties and obligations hereunder shall not in any event extend for more than two (2) years beyond the date of shipment of the BADU SwimJet System(s) from the factory (the "Limited Warranty Period"). The Limited Warranty is subject to each of the following additional terms and conditions:

1. **IN THE EVENT OF ANY BREACH OF THE LIMITED WARRANTY, SPECK PUMPS-POOL PRODUCTS, INC.'S ENTIRE OBLIGATION AND LIABILITY TO BUYER, AND BUYER'S SOLE AND EXCLUSIVE REMEDY SHALL BE AS FOLLOWS:** Speck Pumps-Pool Products, Inc. will, at its option, either repair or replace the BADU SwimJet System(s) or refund to Buyer the purchase price actually paid by Buyer for the BADU SwimJet System(s) subject to the Limited Warranty. Speck Pumps-Pool Products, Inc. shall have no obligations under the Limited Warranty unless Buyer delivers timely written notice to Speck Pumps-Pool Products, Inc. of the Limited Warranty claim within the Limited Warranty Period and returns the BADU SwimJet System(s) to Speck Pumps-Pool Products, Inc. if requested. To the fullest extent permitted by law, Speck Pumps-Pool Products, Inc. expressly disclaims any liability for, and the Limited Warranty does not include or cover, any labor, costs or other expenses in connection with the removal, transportation, shipment, insurance, replacement, repair, or installation of repaired or replaced parts or for any other costs or expenses or damages to property or things including, but not limited to, those arising in connection with the use of, or inability to use, the BADU SwimJet System(s).

2. To the fullest extent permitted by law, the Limited Warranty will be void and of no force or effect and Speck Pumps-Pool Products, Inc. will have no liability, responsibilities or obligations to Buyer or with respect to the BADU SwimJet System(s) in the event of the occurrence of any one or more of the following:

(a) Any damage to the BADU SwimJet System(s) caused by Buyer, any third party, ground movement, other natural forces, acts of God or any other sources or causes not arising from a breach of the Limited Warranty, excluding ordinary wear and tear;

(b) Any replacement, modification, alteration or repair of any parts or components of the BADU SwimJet System(s) by anyone other than Speck Pumps-Pool Products, Inc.;

(c) Any abuse, misuse, accident, tampering with, improper installation or modification of the BADU SwimJet System(s) or any other actions, inactions or failures to act that violate the terms and conditions of this Limited Warranty;

(d) Buyer's failure or inability to present an invoice, bill, receipt or other documentation clearly evidencing that the BADU SwimJet System(s) was installed and maintained in strict compliance with this Limited Warranty and that the claim was timely submitted within the Limited Warranty Period; and/or

(e) Buyer's failure to comply with the conditions and contingencies set forth in paragraph 3 below.

3. The Limited Warranty is expressly conditioned and contingent upon Buyer's strict compliance with each of the following:

(a) Installation of the BADU SwimJet System(s) by an experienced and qualified pool industry professional and a licensed electrician who is licensed within the jurisdiction in which the BADU SwimJet System(s) is installed and will be used; and

(b) Buyer's operation and maintenance of the BADU SwimJet System(s) in strict accordance with Speck Pumps-Pool Products, Inc.'s printed operator/maintenance manuals delivered with the BADU SwimJet System(s).

4. **DISCLAIMER: THE LIMITED WARRANTY IS THE ONLY WARRANTY MADE AND IS IN LIEU OF ALL OTHER WARRANTIES, AND ANY AND ALL IMPLIED WARRANTY OR CONDITION OF MERCHANTABILITY, THE IMPLIED WARRANTY AGAINST INFRINGEMENT, AND THE IMPLIED WARRANTY OR CONDITION OF FITNESS FOR A PARTICULAR PURPOSE ARE EXPRESSLY LIMITED IN THEIR SCOPE AND DURATION TO THE ONE YEAR TERM OF THE LIMITED WARRANTY SET FORTH HEREIN. SOME STATES DO NOT ALLOW LIMITATIONS ON HOW LONG AN IMPLIED WARRANTY LASTS, SO THE ABOVE LIMITATION MAY NOT APPLY TO THE BUYER.**

5. **TO THE FULLEST EXTENT PERMITTED BY LAW, IN NO EVENT SHALL SPECK PUMPS-POOL PRODUCTS, INC. OR ITS OFFICERS, DIRECTORS, EMPLOYEES, SHAREHOLDERS, AGENTS, OR REPRESENTATIVES BE LIABLE FOR ANY SPECIAL, INDIRECT, INCIDENTAL, EXEMPLARY OR CONSEQUENTIAL DAMAGES OR LOSS, INCLUDING TIME, MONEY, GOODWILL, AND LOST PROFITS IN ANY WAY WHICH MAY ARISE HEREUNDER OR FROM THE USE OF OR INABILITY TO USE THE BADU SWIMJET SYSTEM(S) OR THE PERFORMANCE OR NONPERFORMANCE OF ANY OBLIGATION UNDER THIS LIMITED WARRANTY. THIS PARAGRAPH, THE WARRANTY DISCLAIMERS IN PARAGRAPH 4 ABOVE, AND THE SOLE AND EXCLUSIVE REMEDY SET FORTH IN PARAGRAPH 1 ABOVE SHALL APPLY EVEN IF SPECK PUMPS-POOL PRODUCTS, INC. HAS BEEN NOTIFIED OF THE POSSIBILITY OR LIKELIHOOD OF SUCH DAMAGES OCCURRING, WHETHER SUCH LIABILITY IS BASED ON CONTRACT, TORT, NEGLIGENCE, STRICT LIABILITY, PRODUCTS LIABILITY OR OTHERWISE, AND EVEN IF ANY REMEDY STATED HEREIN FAILS OF ITS ESSENTIAL PURPOSE. SOME STATES DO NOT ALLOW THE EXCLUSION OR LIMITATION OF SPECIAL, INDIRECT, INCIDENTAL, EXEMPLARY OR CONSEQUENTIAL DAMAGES OR LOSS, SO THE ABOVE EXCLUSIONS AND LIMITATIONS MAY NOT APPLY.**

6. This Limited Warranty gives the Buyer specific legal rights, and the Buyer may also have other rights, which vary from state to state.

7. A return merchandise authorization ("RMA") must be obtained from Speck Pumps-Pool Products, Inc. before returning any product. Products returned without an RMA will be refused and returned, unopened, to the Buyer. All returned products are to be sent freight prepaid and insured for Buyer's protection to the manufacturer at 8125 Bayberry Road, Jacksonville, Florida 32256 USA. Under no condition will products be accepted after the expiration of the Limited Warranty Period. Speck Pumps-Pool Products, Inc. shall not bear any costs or risks incurred by Buyer in shipping a defective BADU SwimJet System(s) to Speck Pumps-Pool Products, Inc. or in shipping a repaired or replaced BADU SwimJet System(s) to Buyer.

From:	Simone Kenny, AICP
To:	Simone Kenny, AICP
Cc:	Chuck Merenda; Adam Mengel, AICP, LEED AP BD+C
Bcc:	"Anthony Lombardo"; "Anthony Lombardo"; "Michael Goodman"; "dan wilcox"; "tconner [redacted] cblpa.com"; "Mark Langello"; "Michael Boyd ([redacted] gmail.com)"; "[redacted] gmail.com"
Subject:	FW: Runoff 3 Pelican for Public Record and PDB
Date:	Tuesday, September 9, 2025 9:53:00 AM
Attachments:	image001.png image002.png image003.png image004.png image005.png

Planning and Development Board:

Please see below and attached regarding Item No. 10 on tomorrow's Planning and Development Board regular meeting agenda.

Please contact us with any questions.

Thank you,
Simone

Simone Kenny, AICP
Senior Planner
E: [redacted] flaglercounty.gov | V: 386-313-4067 | W: www.flaglercounty.gov

Flagler County Board of County Commissioners

Bunnell, FL 32110

The mission of Flagler County is to provide high-quality services through a responsive workforce committed to excellence, integrity, in collaboration with the cities and to act as a fiscally responsible steward.

From: Jackie O'Connell <[redacted] yahoo.com>
Sent: Tuesday, September 9, 2025 9:15 AM
To: Simone Kenny, AICP <[redacted] flaglercounty.gov>; Planning Dept <[redacted] flaglercounty.gov>
Subject: Runoff 3 Pelican for Public Record and PDB

This is a photo of the runoff in front of 3 Pelican taken after the rainstorm night before last (~7pm Sept 7, Sunday). The water runoff will be worse when the impervious pool deck and (possible) large pump house are built. Unless Mr. Royer intends to redirect hi**s existing front downspouts across his front lawn** toward Pelican**,** a **similar issue** will be created

on Mockingbird when the **existing front side** downspouts are redirected to Mockingbird**.** And when Mr. Royer's **existing downspouts on back corner of his house are removed off adjacent property*** which is not owned by Mr. Royer **and redirected to Mockingbird**, it will be an **even worse issue** on Mockingbird.

When we get 12-15" rain during a hurricane followed by high tides, the neighborhood streets are going to have a real problem. This is why **we've requested the 3 Pelican variance plan address how runoff will be mitigated and/or kept on Royer property**.

***** photo showing Royer backyard downspouts extending beyond his property line was previously submitted

Thank you,

Jackie O'Connell
[redacted]yahoo.com
336.512.9671 mobile

Adam Mengel, AICP, LEED AP BD+C

From: Simone Kenny, AICP
Sent: Tuesday, September 9, 2025 9:59 AM
To: Simone Kenny, AICP
Cc: Adam Mengel, AICP, LEED AP BD+C; Chuck Merenda
Subject: FW: Request for Fair Review Application #2025080063 of Pool House/Pump House/Shed Project

Planning and Development Board,

Please see below regarding Item No. 10 on tonight's Planning and Development Board regular meeting agenda.

Please contact us with any questions.

Thank you,
Simone

Simone Kenny, AICP
Senior Planner

E: [redacted]flaglercounty.gov | V: 386-313-4067 | W: www.flaglercounty.gov

Flagler County Board of County Commissioners

Bunnell, FL 32110

The mission of Flagler County is to provide high-quality services through a responsive workforce committed to excellence, integrity, in collaboration with the cities and to act as a fiscally responsible steward.

From: Jan <[redacted]ptd.net>
Sent: Tuesday, September 9, 2025 12:36 AM
To: Simone Kenny, AICP <[redacted]flaglercounty.gov>; Adam Mengel, AICP, LEED AP BD+C <[redacted]flaglercounty.gov>
Subject: Request for Fair Review Application #2025080063 of Pool House/Pump House/Shed Project

Dear Simone,

I am writing this letter as the homeowner. My husband, Raymond Royer, has been submitting and presenting applications to the county since February 2025. He has attended the TRC meetings prior to each application, asked questions, and sought guidance every step of the way — and yet we are still at a dead end.

Our project includes a small pool and a pool house/pump house/shed designed to be 9'7" high. The county's suggestion that we should use a 4-foot high shed is not practical or realistic. The structure must allow someone to stand inside to properly service the pool motor and to store patio furniture and equipment during storms. Our design is professional, aesthetically matches our home, and fully complies.

Instead of focusing on the facts and zoning requirements, we have been subjected to months of irrelevant and baseless objections from a small group of neighbors, two of which do not even reside in our community full-time. These property owners have been the most vocal about our project, even though it does not directly affect their property or rights as owners. Their objections are nothing more than ridiculous guessing and misunderstandings. To suggest we "swim in the ocean," "throw patio furniture into the pool," or that the pool house could somehow become living quarters or an Airbnb has no basis in reality.

One neighbor even claimed our professional renderings are "just computer-generated pictures" instead of recognizing that they were created to county specifications. This same neighbor went so far as to take a photo of our home and use a marker tool to draw their own version of what they thought we were requesting. That type of misrepresentation is absurd and misleading.

We have always spoken with our neighbors cordially and have acted in good faith throughout this process, following every rule, request, and requirement from the county. The truth is that some neighbors are using unrelated disputes — like our private roadway disagreements — to stir up conflict and delay our project.

It is our request that the county:

1. Disregard irrelevant, speculative, and inaccurate objections that are not tied to this project or zoning requirements.
2. Recognize that our project meets county requirements and is designed responsibly.
3. Provide a fair and timely resolution so we can move forward without further hardship.

This situation has cost us significant personal time, reapplication fees, rendering design expenses, and repeated document submissions. It has also caused unnecessary stress and division in the community.

We expect and request a fair decision in this matter, and we ask that the county reciprocate the good faith we have shown throughout this process by providing a timely and reasonable resolution.

The pool house/pump house/shed dimensions are well under the county's maximum allowance of 12 feet in height, and our project fully complies with the applicable standards.

Thank you for your attention and for moving this forward based on facts and requirements, not speculation.

Sincerely,

Jan Paxson

3 Pelican Lane

Adam Mengel, AICP, LEED AP BD+C

From: Dan OConnell <[redacted]yahoo.com>
Sent: Tuesday, September 9, 2025 2:10 PM
To: Simone Kenny, AICP; Planning Dept
Subject: 3 Pelican variance

Good afternoon Simone. I plan to bring you a flash drive with 5 slides for my presentation this evening so you will be able to show. Much easier than trying to use my cell phone. Which format is easiest for you, power point or pdf?

Additionally can you please send me any additional public comments you have received that did not make the packet posted Friday.

Thank you,
Dan OConnell

Sent from my iPhone

Adam Mengel, AICP, LEED AP BD+C

From: Simone Kenny, AICP
Sent: Tuesday, September 9, 2025 3:44 PM
To: Dan OConnell; Planning Dept
Subject: RE: 3 Pelican variance
Attachments: 20250908-0950-Harris Email.pdf; 20250908-1442-Oconnell Email.pdf; 20250909-0036-Paxon Email.pdf; 20250909-0953-Oconnell Email.pdf; 20250907-1400-Benoit email.pdf; 20250908-0822-Lane Email.pdf

Hello,

We cannot accept flash drives due to cybersecurity concerns. You can print-out your presentation or you can email it me. PowerPoint is fine.

Attached are public comments related to item 10 received after publishing.

Simone Kenny, AICP
Senior Planner
E: [redacted]flaglercounty.gov | V: 386-313-4067 | W: www.flaglercounty.gov

Flagler County Board of County Commissioners

Bunnell, FL 32110

The mission of Flagler County is to provide high-quality services through a responsive workforce committed to excellence, integrity, in collaboration with the cities and to act as a fiscally responsible steward.

-----Original Message-----
From: Dan OConnell <[redacted]yahoo.com>
Sent: Tuesday, September 9, 2025 2:10 PM
To: Simone Kenny, AICP <[redacted]flaglercounty.gov>; Planning Dept <[redacted]flaglercounty.gov>
Subject: 3 Pelican variance

Good afternoon Simone. I plan to bring you a flash drive with 5 slides for my presentation this evening so you will be able to show. Much easier than trying to use my cell phone. Which format is easiest for you, power point or pdf?

Additionally can you please send me any additional public comments you have received that did not make the packet posted Friday.

Thank you,
Dan OConnell

Sent from my iPhone

Growth Management Department-Planning & Development Project No.2025080063-AR 5921-Variance in Residential Limited Commercial District (3 Pelican Lane)
September 9, 20225 Board Meeting

comments from neighbor at 7 Pelican Lane (Nancye Walls) – Please vote NO based on
1. This project keeps going round and round. Board has approved EVERYTHING EXCEPT height of pump house. I do not see a 9-10 foot tall, 100 square foot building on front of property and ON PROPERTY LINE anywhere in Flagler County. Has Board ever approved variance like this ?

2. The pictures of wall and pump house are not the way it will really look.. They dont reflect the right-of-way intersection and existing houses that abut his property or the Power connection to the roof that will stick up like a pipe chimney. They dont reflect my tenants parking their work trucks along his 4 foot wall. There are 4 vacant lots - 2 at either end of Mockingbird and 2 behind Mr. Royer property. These will eventually be built on and each builder will want to extend to property line – front, side and back. They will all want setback variances like 3 Pelican. This is the start of ever growing congestion and falling property values.

3. As time goes on and property is sold, the probability of re-purposing this pump house is high – expensive pumps that generate wave resistance is low priority for most people. They only need to go to ocean. Expect pump house to become pool house, in-law suite, quest house, tiny house, BNB !!!

4. Hardship ? There are 3 pools, 2 detached garages in neighborhood and no project required a variance because owners followed the rules. Apparently the hardship is housing pumps. The pumps Mr Royer described were German made and very expensive. I googled this and found "Badu Jet Super-Sport Swim Jet System, 208-230V- $9,626.00 ships free – **shipping dimensions 25 by 20 by 21 inch; weight 124 pounds** upc code 840182102952" I have attached a picture. The control unit can be attached to wall to give easy access to changing water volume and air regulator

VR, [signature] 571-426-2867









Adam Mengel, AICP, LEED AP BD+C

From: Mo Brunk <[redacted]ymail.com>
Sent: Wednesday, September 10, 2025 12:04 PM
To: Adam Mengel, AICP, LEED AP BD+C
Subject: Project No. 2025080063 – REQUEST FOR A VARIANCE 3 Pelican Lane

Good Morning Mr. Mengel,
I attended last evening's meeting (and spoke) regarding the variance requested at 3 Pelican Lane. Would it be possible for you to email me copies of the letters neighbors sent to you regarding their stance on the proposed variance? I do not see them in the correspondece attached to the paperwork of Mr. Royer's documentation file.

Thank you for you assistance.
Maureen Brunk
5 Cardinal Lane
Flagler Beach

443-472-7402

Adam Mengel, AICP, LEED AP BD+C

From: Adam Mengel, AICP, LEED AP BD+C
Sent: Wednesday, September 10, 2025 3:03 PM
To: Mo Brunk
Cc: Simone Kenny, AICP; Chuck Merenda; PublicRecords
Subject: RE: Project No. 2025080063 – REQUEST FOR A VARIANCE 3 Pelican Lane
Attachments: 20250908-1442-Oconnell Email.pdf; 20250909-0036-Paxon Email.pdf; 20250909-0953-Oconnell Email.pdf; 20250907-1400-Benoit email.pdf; 20250908-0822-Lane Email.pdf; 20250908-0950-Harris Email.pdf; Scanned Document.pdf; 20250908-0902-Walls email.pdf

Hi Ms. Brunk:

When we publish the agenda and backup – typically the Friday before the Planning and Development Board meeting scheduled for the following Tuesday – we include in the backup all correspondence received up until the date of publication. Anything received after publishing the agenda and backup is sent to the Planning and Development Board via email.

I have attached the emails that we received (and sent to the Planning and Development Board members) related to Project No. 2025080063 following the publication of the Planning and Development Board's agenda and backup for the September 9, 2025 meeting.

I hope that this information if helpful.

Thank you,

Adam

Adam Mengel, AICP, LEED AP BD+C
Growth Management Director

E: [redacted]flaglercounty.gov | V: 386-313-4065 | W: www.flaglercounty.gov

Flagler County Board of County Commissioners
1769 E. Moody Blvd., Bldg 2
Bunnell, FL 32110

The mission of Flagler County is to provide high-quality services through a responsive workforce committed to excellence, integrity, in collaboration with the cities and to act as a fiscally responsible steward.

From: Mo Brunk <[redacted]ymail.com>
Sent: Wednesday, September 10, 2025 12:04 PM
To: Adam Mengel, AICP, LEED AP BD+C <[redacted]flaglercounty.gov>
Subject: Project No. 2025080063 – REQUEST FOR A VARIANCE 3 Pelican Lane

Good Morning Mr. Mengel,
I attended last evening's meeting (and spoke) regarding the variance requested at 3 Pelican Lane. Would it be possible for you to email me copies of the letters neighbors sent to you regarding their stance on the proposed variance? I do not see them in the correspondece attached to the paperwork of Mr. Royer's documentation file.

Thank you for you assistance.
Maureen Brunk
5 Cardinal Lane
Flagler Beach

443-472-7402

Adam Mengel, AICP, LEED AP BD+C

From: Jackie OConnell <[redacted]yahoo.com>
Sent: Friday, October 31, 2025 4:38 PM
To: Adam Mengel, AICP, LEED AP BD+C
Cc: Chuck Merenda; Simone Kenny, AICP
Subject: Re: Royer 3 Pelican Lane appeal

Thank you.
Jackie

Excuse brevity and typos, sent from mobile device

On Oct 31, 2025, at 4:17 PM, Adam Mengel, AICP, LEED AP BD+C <[redacted]flaglercounty.gov> wrote:

Hi Ms. O'Connell:

This week Mr. Royer sent us an email stating that he would like his variance appeal to be heard by the Board of County Commissioners at its Monday, January 12, 2026 regular meeting starting at 5 p.m. We will provide public notice – letters and signs – as the meeting date approaches.

I wanted to send this email to you now so that you are aware of this date.

Please contact us with any questions.

Thank you,

Adam

Adam Mengel, AICP, LEED AP BD+C
Growth Management Director

E: [redacted]flaglercounty.gov | V: 386-313-4065 | W: www.flaglercounty.gov

Flagler County Board of County Commissioners
1769 E. Moody Blvd., Bldg 2
Bunnell, FL 32110

The mission of Flagler County is to provide high-quality services through a responsive workforce committed to excellence, integrity, in collaboration with the cities and to act as a fiscally responsible steward.

Adam Mengel, AICP, LEED AP BD+C

From: Jackie O'Connell <[redacted]yahoo.com>
Sent: Tuesday, January 6, 2026 11:13 AM
To: Sarah Spector
Cc: Adam Mengel, AICP, LEED AP BD+C; Sean S. Moylan
Subject: FW: follow up Board/Commission meetings - Royer Appeal 01.12.26

Ms. Spector,
In reviewing the Royer Appeal packet provided to the BCC, it appears that four variance opposition letters were excluded. These letters were submitted to the Planning Board for its September meeting. For due process, it is very important that the Commissioners have a full picture of the amount of opposition to the variance request. Below is Mr. Moylan's response when a similar issue occurred at the May appeal.

Jackie O'Connell
Mockingbird Lane

-----Original Message-----
From: Sean S. Moylan <[redacted]flaglercounty.gov>
Sent: Monday, August 18, 2025 8:08 AM
To: Jackie OConnell <[redacted]yahoo.com>
Subject: RE: follow up Board/Commission meetings

Good morning,
I verified your comments/emails were not made part of the record on appeal. I instructed staff that the entire record must be presented to the BCC on appeals.

Sean S. Moylan
Deputy County Attorney
Board Certified City, County, and Local Government Law
E: [redacted]flaglercounty.gov | V: 386-313-4056

Flagler County Board of County Commissioners
1769 E. Moody Blvd., Bldg 2
Bunnell, FL 32110

-----Original Message-----
From: Jackie OConnell <[redacted]yahoo.com>
Sent: Sunday, August 17, 2025 2:02 PM
To: Sean S. Moylan <[redacted]flaglercounty.gov>
Subject: follow up Board/Commission meetings

Hello Mr. Moylan,
I appreciate the time you took to talk with me last Wednesday. There were a couple of items, relating to meetings on May 5 and Aug 12, that you were going to verify or research. Would you be able to provide an update (call or email) sometime on Monday, 8/18?
Thanks,
Jackie O'Connell

336.512.9671 mobile
Excuse brevity and typos, sent from mobile device

January 6, 2026

Flagler County Planning & Development

Dear sirs:

Re: Project No. 2025080063

Please include my objection again to the requested variance and appeal. I have provided the attached letters and photos previously submitted for previous hearings on this matter.

Sincerely,

George E. Benoit

George E. Benoit

14 Pelican Lane
15 Pelican Lane
17 Pelican Lane
6 Driftway Terrace
Flagler Beach, FL 32136

September 6, 2025

Flagler County Planning & Development

Dear sirs:

Re: Project No. 2025080063

Please include my objection again to the requested variance. I had provided the attached letter and photos for previous hearings on this matter.

Sincerely,

George E Benoit

17 Pelican Lane &
6 Driftway Terrace
Flagler Beach, FL 32136

July 8, 2025

Flagler County Planning and Development Board
1769 E. Moody Blvd., Bldg 2
Bunnell, FL 32110

RE: Project No. 2025050042 – AR 5689 – Variance in the R/C (Residential Limited Commercial) District

Dear sirs:

I am opposed to the requested variance for the following reasons:

1. I own two properties at the end of Pelican Lane. Pelican Lane slopes from route A1A down to the intracoastal waterway and all the stormwater runoff ends up in both of my yards every time we have a heavy rain.

2. The lots in the subdivision are all small under 10,000 ft.^{2}.

3. Granting a variance for a large shed roof will add to the water runoff and more accumulation on my property, which I don't need.

4. By approving this variance you will be setting a precedent for this type of request.

5. See 3 photos.

   a. Pelican Lane looking up to A1A.
   b. Sand and stone that washes down after storms.
   c. Flooded yard.

Sincerely,

George C Benoit

George E. Benoit


PELICAN LANE ↑
14 PELICAN →
← 15 PELICAN


14 PELICAN →
SAND + STONE
FROM WATER/RAIN


17 PELICAN

Adam Mengel, AICP, LEED AP BD+C

From: rental POC, Nan <[redacted]gmail.com>
Sent: Friday, January 9, 2026 1:25 PM
To: Nan Wahl; Jackie OConnell; Planning Dept
Subject: Jan 12, 2026 Mtg of Flagler county Commissioners proj #2025080063, 3 Pelican Lane
Attachments: 3 Pelican VARIANCES appeal 12 Jan.odt

Comments for Flagler County Board of County Commissioners, Jan 12, 2026, concerning 3 Pelican Lane Project # 2025080063

Good morning, I am Nancye Walls, owner of 7 Pelican Lane and I do not support Mr Royer's appeal.. I feel the Planning Boards was more than fair in approving all variances, I even worry that these variances set a bad precedence for future development- 4 -5 vacant lots within River-Beach Subdivision whose owners will want the same variances that virtually allow boundary to boundary construction with limited provisions for utilities, jeopardizes safety, disregards public access, limits privacy and puts a utility building in direct sight of A1A travelers and most of the neighborhood residences. Property values are declining all over and this building is going to be an eye-sore !

DID THE FLAGLER COUNTY PLANNING PROCESS FAIL MR ROYER ?

Multiple variances requested and **approved by the Planning Board in February 2025:**

Variances: New construction of pool, pump house, pool deck
3.5 foot rear
25 foot left street side
.8 percentage point lot coverage

These variance allow the construction of approximately 100 square foot pool house situated on or within 2 feet of the property border with Mockingbird Street

ALL VARIANCES WERE APPROVED BUT HEIGHT OF POOL HOUSE WAS NOT TO EXCEED FOUR FEET (per subdivision covenants) and the square footage allowed was virtually unlimited if the pool pumps and storage were incorporated into the 4 foot fence

Mr Royer is appealing the limitation on the pool house height. He plans to build a 8 by 12 foot concrete building that is approximately 9 feet high almost directly on the property line – no setback – and feels the height limitation restricts the full use of his property. My property at 7 Pelican is directly across Mockingbird. The only thing good about the prospects of having a high, wide solid concrete wall so near my property is that I can bounce a tennis ball against it.

I don't see high structures on the side of the road in any residential areas. There are also other factors that must be considered : utility right-of-ways, preserving property values, public safety, and setting a standard that is inconsistent with the neighborhood are just a few.

Adam Mengel, AICP, LEED AP BD+C

From: Ray <[redacted]ptd.net>
Sent: Sunday, January 11, 2026 10:25 AM
To: Adam Mengel, AICP, LEED AP BD+C; Simone Kenny, AICP
Cc: Raymond Royer
Subject: Fwd: Swim jet installation
Attachments: Letter 01-09-2026.pdf

To whom this concerns,
Please summit this into my file for 1/12/2026 5:30 pm. schedule appeal meeting. This is a follow up about the sales manager Chris having a general conversation Speck installation with a neighboring party.
Chris was not aware of his conversation or email exchange was going to be used for an outside reference, like a neighbor installation being a mixed pool equipment or the environment being by salt conditions to hurricane zones.

Thanks,
Raymond Royer

Sent from my iPhone

Begin forwarded message:

> **From:** Ray <[redacted]ptd.net>
> **Date:** January 9, 2026 at 1:21:44 PM EST
> **To:** Chris Doyle <c.[redacted]speck-pumps.com>
> **Subject: Re: Swim jet installation**
>
> Chris,
> Perfectly Balanced with explaining and thanks.
> Ray
> Sent from my iPhone
>
> > On Jan 9, 2026, at 11:38 AM, Chris Doyle <c.[redacted]speck-pumps.com> wrote:
> >
> > Hey Ray,
> >
> > See the attached letter in reference to the pool equipment situation. Please let me know if you have any questions.
> >
> > Regards,

Chris Doyle
Southeast Regional Sales Manager

Speck Pumps • 8125 Bayberry Road •Jacksonville, FL 32256 • USA
Phone: 904-739-2626 | **Cell: 904-314-3050** | **Fax:** 904-737-5261
E-mail: C.[redacted]speck-pumps.com | **Website:** www.speck-pumps.com

NOTICE OF CONFIDENTIALITY: This e-mail from Speck Pumps-Pool Products, Inc. is intended only for the use of the individual or entity to whom it is addressed and may contain confidential, copyrighted and/or legally privileged information. If you are not the intended recipient, you are hereby notified that any dissemination, distribution or copying of this e-mail is strictly prohibited. It is strictly forbidden to share any part of this message with any third party, without written consent of the sender. If you received this e-mail in error please return it to the sender and destroy the original message. Thank you.

While anti-virus software is in place the recipient should be aware that this e-mail and any attachments might not be free from viruses in their various forms. Speck Pumps-Pool Products, Inc. accepts no liability for any loss or damage that may occur as a result of the transmission to the recipient.

<Letter 01-09-

26.pdf>

Hey Ray,

This message is intended to provide clarification from Speck Pumps' perspective regarding a prior technical discussion.

The original conversation and related emails were part of a general, informational exchange concerning the BADU swim jet system Package D and its typical height and installation requirements. That discussion was limited in scope and intended solely to address general system requirements under standard installation scenarios.

It has since come to our attention that this information was referenced in relation to an overall pool equipment configuration that was not discussed in the prior conversation. Other swimming pool products—such as pool pumps, salt systems, filtration equipment, and heat pumps—may have different sizing or installation requirements that fall outside the scope of the BADU swim jet system.

While we cannot speak to the installation guidelines or requirements of other swimming pool equipment manufacturers, it is our general opinion that minimizing prolonged exposure to salt air will contribute to improved longevity of most pool equipment.

From the manufacturer's standpoint, we do not evaluate, approve, or disapprove site-specific structures, neighboring installations, or local zoning interpretations. Any application of our general guidance to a specific project should be reviewed by the appropriate design professionals, installers, or local authorities to ensure compliance with all applicable codes and conditions.

We remain available to provide general technical information related to the swim jet system itself, should it be helpful; however, we are not positioned to arbitrate or interpret matters between neighboring parties.

Please feel free to reach out if additional technical clarification is needed regarding the swim jet system.

Best Regards,

Chris Doyle
Southeast Regional Sales Manager

Adam Mengel, AICP, LEED AP BD+C

From: Ray <[redacted]ptd.net>
Sent: Sunday, January 11, 2026 11:20 AM
To: Adam Mengel, AICP, LEED AP BD+C; Simone Kenny, AICP
Cc: Raymond Royer
Subject: Between 3388-3398 N. Ocean Shore Blvd.

To whom this concerns,

This is one of three pool structures larger than 4' in height within plus or minimize one mile from 3 Pelican Lane , Flagler Beach. This property is located in the RC corridor that stretches north on A1A by Zoning and Planning.

This is a new structure being constructed behind the home with a large pool and homeowner planning in commendation pool housing within feet of the pool. This structure appears to be 12' in height and approximately 500 plus sqft.

The pool housing structure is a very close match of the main structure that is three stories in height. The pool house structure was also built in block with a mental roof.

Please note this into my file as well for 01/12/2026 5:30 pm. repeal hearing.

Thanks,
Raymond Royer







Sent from my iPhone

From:	Mo Brunk
To:	Adam Mengel, AICP, LEED AP BD+C; Planning Dept
Subject:	Project No. 2025080063 – Request for an Appeal of the Planning and Development Board's Decision
Date:	Monday, January 12, 2026 2:43:39 PM

Dear Mr. Mengel and the Planning Department,
I am requesting the Commissioners uphold the Planning Board's decision. Mr. Royer has **NOT** been deprived of all reasonable use of the property as allowed in the zoning district. Quite the opposite, he has been granted the variances necessary to have a pool, pool deck, and pump house; there is no longer a hardship.

In deciding, the Board of County Commissioners must make three determinations: the Planning and Development Board failed to base its decision on competent substantial evidence, accord due process, and/or observe the essential requirements of law. All 3 determinations were successfully met by the Planning and Development Board.

Mr. Royer is creating a self-induced hardship by insisting on an over-sized pump house. If he doesn't feel the 4-foot height is adequate and he cannot build the pump house he desires with the variances granted, then perhaps this is not the ideal lot for him.

The other homes in the neighborhood with pools have not requested any special variances for their pool pumps; there is no need to set a precedence for over-sized buildings on small lots.

The requirements specify "A variance, if granted, shall be the minimum variance necessary to alleviate the hardship". The board has granted Mr. Royer the necessary variances for the pool and pump house; he has not been denied use of his property. Please do not overturn the Planning Board's decision regarding an over-sized pump house.

There is no competent, substantial evidence in the official record that Mr. Royer has unnecessary hardship; therefore, the Commissioners should affirm the Planning Board's decision.

Maureen & Andrue Brunk
5 Cardinal Lane

FLAGLER COUNTY PROPERTY APPRAISER



Overview



Legend

- Parcels
- Roads
- Streams and Rivers

Date created: 3/27/2026
Last Data Uploaded: 3/27/2026 7:26:59 AM

Developed by SCHNEIDER GEOSPATIAL

Growth Management Department
Planning & Development
1769 E. Moody Blvd, Bldg. 2
Bunnell, FL 32110

FLAGLER COUNTY FLORIDA

Flaglercounty.gov
Phone: (386)313-4009

March 26, 2026

«OwnerName» «OwnerAddress1»
«OwnerAddress2»
«OwnerCityStZip»

RE: Project No. 2025080063 – AR No. 5921 – Variance in the R/C (Residential/Limited Commercial) District

Dear Property Owner,

As an owner of property within 300' of the property referenced herein, the Flagler County Planning Department, in accordance with Section 2.07.00 of the Flagler County Land Development Code, advises you that:

A request has been made by owner Raymond R. Royer Jr., located at 3 Pelican Lane, identified as Parcel Number 23-11-31-5200-00000-0130, for a Variance from the 25 Foot Minimum Street Side (West) Setback Requirement for a Pump House and a Variance from the Maximum Allowed Lot Coverage in the R/C (Residential/Limited Commercial) District.

You are hereby notified that a public hearing before the **Flagler County Planning and Development Board**, required by law, will be held in the Flagler County Government Services Building, Board Chambers, at 1769 East Moody Boulevard, Building 2, Bunnell, Florida, on **April 14 , 2026** beginning at **6:00 p.m.** or as soon thereafter as possible. You are welcome to attend and express your opinion.

Sincerely,
Hannah Lademann

Hannah Lademann
Planner

NOTE: PURSUANT TO SECTION 286.0105. FLORIDA STATUTES, IF A PERSON DECIDED TO APPEAL ANY DECISION BY THE BOARD, AGENCY OR COMMISSION WITHRESPECT TO ANY MATTER CONSIDERED AT SUCH MEETING OR HEARING, HE OR SHE WILL NEED A RECORD OF THE PROCEEDINGS AND THAT, FOR SUCH PURPOSE, HE OR SHEWILL NEED TO ENSURE THAT A VERBATUM RECORD OF THE PROCEEDINGS IS MADE, WHICH RECORD INCLUDES THE TESTAMONY AND EVIDENCE UPON WHICH THE APPEAL IS BASED.

Andy Dance	Greg Hansen	Kim Carney	Leann Pennington	Pam Richardson
District 1	District 2	District 3	District 4	District 5

ParcelId	OwnerName	OwnerAddress1	OwnerAddress2	OwnerAddress3	OwnerCityStZip
23-11-31-1700-00000-0090	HOGAN JAMES A &	DEBORAH A H&W	12 DRIFTWAY TERRACE		FLAGLER BEACH, FL 32136
23-11-31-4790-00000-0290	ROANE DONALD T &	DONNA W H&W	344 SAINT JOHNS FOREST BOULEVARD		SAINT JOHNS, FL 32259
23-11-31-5300-00000-0210	BRUNK ANDRUE E	& MAUREEN O H&W LIFE ESTATE	5 CARDINAL LANE		FLAGLER BEACH, FL 32136
23-11-31-5300-00000-0180	HARRIS RENE DAWN & JEFFREY D	RIZK	3 CARDINAL LANE		FLAGLER BEACH, FL 32136
23-11-31-1700-00000-0110	STEINBRING ANNE L & DAVID B BUSCH H&W		8 DRIFTWAY TERRACE		FLAGLER BEACH, FL 32136
23-11-31-5300-00000-0060	HARE ROBERT & NATALIE	DIEDERICH H&W	12 PELICAN LN		FLAGLER BEACH, FL 32136
23-11-31-5300-00000-0110	ELLSBURY CHARLES E & LINDA M	H&W	9 PELICAN LANE		FLAGLER BEACH, FL 32136
23-11-31-5300-00000-0170	OCONNELL DANIEL E & JACQUELINE	A OCONNELL H&W	3617 REDFIELD DRIVE		GREENSBORO, NC 27410
23-11-31-1700-00000-0020	LUKUCH GRAZYNA	LIFE ESTATE	1239 OCEAN SHORE BOULEVARD APT 9E		ORMOND BEACH, FL 32176
23-11-31-1700-00000-0120	BENOIT GEORGE E JR LIFE ESTATE		17 PELICAN LANE		FLAGLER BEACH, FL 32136
23-11-31-5300-00000-0120	WALLS NANCYE WINDSOR		89 WESTFIELD LANE		PALM COAST, FL 32164
23-11-31-1700-00000-0130	FRASER DEREK GUY TRUSTEE &		343 BLUE HAMPTON DRIVE		PONTE VEDRA, FL 32081
23-11-31-5300-00000-0050	GORDO INVESTMENTS MANAGEMENT LLC		4070 N CHINOOK LN		ORMOND BEACH, FL 32174
23-11-31-1700-00000-0010	HINMAN JANET F TRUSTEE		7 DRIFTWAY TERRACE		FLAGLER BEACH, FL 32136
23-11-31-5300-00000-0230	OCONNELL JACQUELINE & DANIEL E	OCONNELL W&H	3617 REDFIELD DRIVE		GREENSBORO, NC 27410
23-11-31-5300-00000-0040	MCAULIFFE HEATHER	& KINDRA MCCULLOUGH JTWROS	8 PELICAN LANE		FLAGLER BEACH, FL 32136
23-11-31-5300-00000-0160	HOYT DAVID HOUSTON	LIFE ESTATE	3880 MARTIN STREET		ORLANDO, FL 32806
23-11-31-5300-00000-0130	ROYER RAYMOND R JR & JANICE L	PAXSON	3 PELICAN LANE		FLAGLER BEACH, FL 32136
23-11-31-1700-00000-0140	FRASER DEREK G TRUSTEE		343 BLUE HAMPTON DRIVE		PONTE VEDRA, FL 32081
23-11-31-5300-00000-0030	MCKAIG SERRA		213 W VIRGINIA AVENUE		DELAND, FL 32720
23-11-31-4790-00000-0300	CORNERSTONE REALTY AND TRUST LLC		35 N RIVERWALK DR		PALM COAST, FL 32137
23-11-31-5300-00000-0240	TASLIDZIE ESAD		5922 CORAL LAKE DRIVE		POLMANO BEACH, FL 33063
23-11-31-5300-00000-0150	ANESGART ALICE E LIFE ESTATE		3126 N OCEAN SHORE BOULEVARD		FLAGLER BEACH, FL 32136
23-11-31-5300-00000-0020	CASTILLO MANUEL & CARIDAD H&W		3110 N OCEAN SHORE BLVD		FLAGLER BEACH, FL 32136
23-11-31-5300-00000-0140	SCUDDER ROBERT KIRK	& GINA MARIE CASTELLO JTWROS	3118 N OCEAN SHORE BLVD		FLAGLER BEACH, FL 32136
23-11-31-4790-00000-0310	SCHWEITZ FREDRICK O		400 SW 48TH STREET RD		OCALA, FL 34474
23-11-31-5300-00000-0010	JANECZEK THOMAS		3110 N OCEAN SHORE BLVD		FLAGLER BEACH, FL 32136
23-11-31-1700-00010-00B0	HICKS JOHN	& BRITTANY H&W	1001 TEMPLE GROVE PLACE		WINTER GARDEN, FL 34787
23-11-31-1700-00010-00C0	POKORSKY THOMAS M & MICHELE M	POLORSKY H&W	3131 N OCEAN SHORE BLVD		FLAGLER BEACH, FL 32136
23-11-31-0000-02110-0000	THREE SISTERS INVESTMENTS LLC		3206 SANDY RIDGE DR		CLEARWATER, FL 33761
23-11-31-0000-02100-0000	SHIKANY CHARLES P & KRISTIN	H&W	728 W JACKSON BLVD		CHICAGO, IL 60661
23-11-31-0000-02090-0000	3109 N A1A LLC		DEREK OR JODIE FRASER 343 BLUE HAMPTON DRIVE		PONTE VEDRA, FL 32081
23-11-31-0000-02080-0000	3109 N A1A LLC		DEREK OR jODIE FRASER 343 BLUE HAMPTON DRIVE		PONTE VERDA, FL 32081
23-11-31-2925-00000-0010	MOLLIS KRISTI LYNN		3105 N OCEAN SHORE BLVD		FLAGLER BEACH, FL 32136

I hereby affirm mailed notice to each owner on 3/26/2026 for the Planning and Development Board meeting on 4/14/2026 at 6:00 pm.

Hannah Lademann, Planner


Pelican
APPLICATION # 202508006 3
NOTICE OF
PUBLIC HEARING
THE FLAGLER COUNTY BOARD OF COUNTY COMMISSIONERS WILL HOLD A PUBLIC HEARING AT:
FLAGLER COUNTY GOVERNMENT SERVICES BUILDING BOARD CHAMBERS
1769 E. MOODY BOULEVARD, BLDG 2; BUNNELL, FL 32110
April 14, 2026 @ 6 P.M.
REQUEST: Variance
APPLICANT: Raymond Royer Jr.
Parcel Number: 23-11-31-5300-00000-0130
Zoning District: R/C
THE PUBLIC HEARING IS BEING HELD FOR THE PURPOSE OF HEARING ANY AND ALL INTERESTED PARTIES AND PERSONS WHO MAY BE FOR OR AGAINST THE APPLICATION, RELATIVE TO THE PROPERTY WHEREON THIS NOTICE IS POSTED.
For additional information visit web page at: www.flaglercounty.gov or call Flagler County Planning & Zoning Department at (386) 313-4009.
DO NOT REMOVE THIS NOTICE PRIOR TO THE PUBLIC HEARING DATE ABOVE

FLAGLER COUNTY PLANNING AND DEVELOPMENT BOARD REGULAR MEETING
Flagler County Government Services Building,
1769 East Moody Blvd., Board Chambers, Bunnell, FL

MEETING MINUTES

Tuesday, April 14, 2026, at 6:00 P.M.

1. **Roll Call:** The meeting was called to order by the Chair and a quorum was present.

   Members Present: Anthony Lombardo, Ron Long (Vice-Chair), Michael Goodman, Timothy Conner, Dan Wilcox and Mark Langello (Chair).

   Members Absent: Michael Boyd (Excused)

   Present: Chuck Merenda, Interim Growth Management Director; Simone Kenny, Senior Planner; and Hannah Lademann, Planner.

   Board Counsel: Sarah Spector, Assistant County Attorney

2. Pledge to the Flag.

3. Approval of March 10, 2026 minutes.

   Motion to approve by: Anthony Lombardo
   Seconded by: Michael Goodman
   Motion carried unanimously.

Quasi-Judicial Process: The audience should refrain from clapping, booing or shouts of approval or disagreement. To avoid potential legal ramification and possible overturning of a decision by the Courts, a public hearing must be fair in three respects: form, substance and appearance.

Time limits will be observed:
Staff – 10 minute presentation.
Applicant – 15 minute presentation (unless time extended by consensus of Board).
Public Comment – 3 minutes per speaker, 5 minutes if speaking on behalf of a group.
Applicant Rebuttal and Closing Staff Comments – 10 minutes each.

Board Secretary swears in members of the public who will testify on any item on todays agenda.

4. Quasi-judicial requiring disclosure of ex parte communication:
   Project 2026020046 – **REQUEST FOR VARIANCE IN THE PUD (PLANNED UNIT DEVELOPMENT) DISTRICT** – Request for a Variance in the PUD (Planned Unit Development) District from the Minimum Required Rear Setback at 21 N Riverwalk Drive. Parcel Number: 27-11-31-4890-00000-0740; Parcel Size: 9,026+/- Square Feet (0.21+/- Acres).Owner/Applicant: George and Heather Houck. (AR 6337). *(TRC, PDB)*

   Board Comments: None

Staff Presentation: Simone Kenny, Senior Planner.

Applicant Presentation: George Houck, Owner.

Public Comments: None

MOTION: The Planning and Development Board finds that all the variance criteria as listed in the guidelines at Land Development Code Section 3.07.03.E have been met and therefore approves Project No. 2026020046 for a 5 foot rear (West) yard setback variance from the minimum required 10 foot rear yard setback for a pool and pool deck at 21 N Riverwalk Drive (Parcel No. 27-11-31-4890-00000-0740)

Motion to approve by: Michael Goodman
Seconded by: Dan Wilcox
Anthony Lombardo – Aye
Dan Wilcox – Aye
Timothy Conner – Aye
Michael Goodman – Aye
Ron Long – Aye
Mark Langello (Chair) – Aye
Motion carries unanimously.

5. Quasi-judicial requiring disclosure of ex parte communication:
Project 2025080063 – **REQUEST FOR VARIANCE IN THE R/C (RESIDENTIAL) LIMITED COMMERCIAL) DISTRICT** – Request for a Variance in the R/C (Residential/limited Commercial) District for a Pump House at 3 Pelican Lane. Parcel Number: 223-11-31-5300-00000-0130; Parcel Size: 7,500+/- Square Feet (0.17+/- Acres). Owner/Applicant: Raymond Royer Jr. (AR 5921).
(TRC, PDB)

Board Comments: Mr. Conner states he has had small talk with Mr. Royer in and out of various meetings. Mr. Langello concurs that he also said a hello to Mr. Royer in the hall prior to today's meeting.

Mr. Conner asks if this is the No vote from before or if prior applications are supposed to be considered. Ms. Kenny states that this is the same application that we heard in September as it was appealed to the County Commission and remanded back to this Board. Mr. Conner asks if they should consider testimony from the first hearing. Mr. Langello states that it's his understanding we will be hearing new evidence either by the public or by Mr. Royer. Ms. Kenny states that they can hear new evidence today, but the application before us today is essentially the same application that was heard in September.

Staff Presentation: Simone Kenny, Senior Planner.

Mr. Long asks for clarification that the applicant holds an approval for the pool, fence and pump house with a 4' height restriction. Staff confirms.

Applicant Presentation: Raymond Royer Jr., Owner and Peter McGrath, Esq.

Mr. Lombardo states that he appreciates the rendering, he states that this would have given a better perspective of what was being proposed.

Mr. Goodman asks for aesthetic purposes, if a window on the pumphouse was considered. Mr. McGrath states that it has not been contemplated at this time, but if it would accommodate the request, he does not foresee it to be an issue.

Mr. Langello gives Mr. McGrath some historic background on why the 4' height limitation was imposed on the original request. He states that because the structure did not meet the setback and was encroaching well into the setback, to compromise and keep the structure harmonious with the 4' fence.

Mr. McGrath states that he understand the location of the home, but that the structure is within the limitations of the approved variance for the setback. And that while the 4' height structure was given to compromise on the setback request; it makes the project unfeasible.

Mr. Langello asks staff if they can show the five emails that were forwarded to the Board as public comment on the screen. He states that the public has been continually showing up to meetings and making repeat comment, and that they should have a chance to be heard.

Public Comments:

Jackie O'Connell, resident of 8 Mockingbird Lane. States she is also speaking on behalf of Nancy Wells, an adjacent neighbor who is unable to attend. She shows the board an overview photo of the neighborhood. She states that unlike other beachside neighborhoods, they have room, space, and a harmonious community. She states they have no roadside structures and would like to keep it that way. She goes through the variance criteria and states that it is a self-created hardship as he bought a lot that was to small for all his wants and needs. She references an email sent by Mr. Royer that states he may go up to 12' high to quote "to create a small storage area like a small attic". She references in previous Planning Board meetings, the Board has asked for engineering plans to support the need for a higher structure, yet months later this is not available. She references Mr. Royer submitted an example of a pool house being built up the road to the Board of County Commission, however Ms. O'Connell states the Commission was not informed that pool equipment was not enclosed in this pool house and that setback variances were not needed. She references what the street view of the structure would look like should this be approved and that there is no desire for the neighborhood to resemble a zero lot-line neighborhood.

Maureen Brunk, resident of 5 Cardinal Lane. She states that this neighborhood is unlike others, as it is older, established and not full of other variances. She states when looking at the rendering, the property line is less than a yard stick away from the side of the street. She asks if they could imagine looking at a 10' high structure, a yard stick away from the street on a corner lot. She states Mr. Royer is not being denied all reasonable use of the property. She states that this Board needs to consider the neighbors and the 5 lots/homes on Mockingbird who will be affected by a structure less than a yard stick away from there ingress/egress and sightline. She states that there has been talks of aesthetics, but the beauty in the eye of the beholder and to those in the neighborhood, this is a detriment.

Dan O'Connell, resident of 7 Mockingbird Lane. States he is speaking on behalf of Dawn Harris of 3 Cardinal Lane. He references the County's Land Development Code and its variance criteria that states that the request should be the minimum relief necessary to alleviate the hardship. He states with the previously approved variances, that Mr. Royer is not being deprived of all reasonable use of his property. He states that a 10' high structure 2.5' of the property line is not the minimum relief

necessary. He states that it is worth noting that Staff has consistently said in all hearings that this is a self-created hardship. He states he does not believe the code intended the Board to award applicants for creating hardships. He states that the Boards decision should be based solely on the variance criteria, and not considering of the renderings provided and their attractiveness, especially given that they're not to scale as previously stated by the applicant. He states that we have heard no new evidence regarding the pumps that requires an additional height allowance. He states that he took the time to read the 28-page installation manual and the 17-page operation manual. He states that no where in the manual does it say that enclosing the pumps is necessary. He states no one in the neighborhood is opposed to Mr. Royer having a pumphouse. He states they are opposed to a structure of that height less than three feet to the property line, on a corner lot. He again states that Mr. Royer has already been granted the variances needed to build his pool and asks that the Board uphold the intent of the County Code in reference to the variance criteria and deny the request as it is not the minimum relief and he is not being deprived of reasonable use of his property.

Raymond Royer Jr. on rebuttal. In reference to the previous mentioned recommendation not to enclose the pumps, he states the person was not aware when making his recommendation not to enclose them that the pumps were by the ocean and that due to the salt, he would enclose them. He states there are other accessory structures in the neighborhood that are larger in size and have been approved. He states he has previously been told not to talk about other people's properties, but doesn't understand how others are allowed to do so.

Peter McGrath, Esq on rebuttal. He states these are non-curbed streets that in essence blend in with the lots. He states that there are no well defined property lines and the structure does not impede the sightline on the corner lot. He states what is being proposed in innocuous. He states that with respect to the character of the subdivision, this small structure cannot be made to be compromising the character. He repeats that the restrictions of this subdivision have dropped off the title of his client's property. He states this is a good faith proposal with well thought out renderings that will not subtract from anyone's quality of life. He asks the board to consider what is feasible and what is not. He states that for ventilation purposes, safety from salty air, hurricane proof and to adequately accommodate the equipment, that the requested structure is what's feasible.

Mr. Langello states that he has proposed alternative locations to Mr. Royer and has not received any comments. Mr. Royer states that the referenced portion of the house was previously enclosed and he does not know the history of the construction. He states that he does not want to attach his permanent structure to a portion of the house where he is not confident in the construction.

Mr. Langello states that he can assure him, from a contractor's point of view, there are a lot of options and ways to make this fit/work on the lot without that high of a structure. He mentions that it appears Mr. Royer is stuck with this one concept and not exploring all options.

Mr. Royer references that force of the pumps, and his history as a Navy swimmer is why he's choosing the system he's choosing. Mr. Langello commends him for his service and states that he has allowed him to speak without interrupting. Mr. Long applauds his persistence on this application. He states that so many alternative options have been proposed, and that he's so stuck on this one proposal. He states, in his opinion, he does not believe this is solely a pumphouse for him. He states he has heard many times over and over the term storage and he believes this is likely wanting a storage building rather than just a pump house. He states that they are bound to give the minimum relief necessary for the requests, which is for a pumphouse – and that what he keeps asking for is not the minimum relief needed for a pumphouse for pool equipment. He states that if he wants to talk about a storage shed, they'll talk about it but that the application in front of them today is for a pumphouse.

Mr. Royer states that he provided renderings as asked for by this Board. He states as he has mentioned time and time again in all hearings that the primary use of the structure is a pumphouse. He states while he may store a ladder in the building or move his furniture inside during a storm but that it is not a storage building. He states that it may be used for additional storage less than 10 percent of the year. He repeats that the primary use is a pumphouse.

Mr. Goodman states that Mr. Royer is being his own worst enemy right now. He states he does not have a problem with the project. He states that his neighbors may have a personal problem with him. He states there is no issue with the line of sight and that it's not a detriment to the community. He states that perhaps he is squeezing the envelope a little too much, but he doesn't have a problem.

Mr. Lombardo asks staff to clarify the Rubbermaid shed and whether or not Mr. Royer could put that on the property without permission. Ms. Kenny references the County's shed policy that a shed less than 60 sq ft in size does not require a permit, however it still needs to meet setbacks.

Mr. Conner states that it's not about the type of structure, it's about the placement of the structure. He states in order to place a structure of any sort in this location; he would need a variance for the setback.

Mr. Conner states that the legal standard for reviewing and approving a variance is substantial competent evidence, but it is not this Boards responsibility to deny the request based on substantial competent evidence so much as it is Mr. Royer's burden to provide substantial competent evidence that the additional height in the structure is needed to support the pumps for approval. He states the Board has given Mr. Royer direction in the past meets to bring them an engineer who can provide real detail competent knowledge, which would then be substantial competent evidence that says the heat load requires a larger structure. He states there has been a lot of statements alleged tonight that the Board has no substantial competent evidence to support. He states they have already given the minimum relief necessary to accommodate the pool and equipment – and that they have not provided substantial competent evidence tonight that would opt them to change the 4' height limitation.

Mr. Lombardo states that he cleans his own pool/equipment and that you need space to be able to do that. He states that he couldn't imagine putting a 4' high structure there with hydraulic pumps and being able to work in there and get the equipment clean, based on his own experience in cleaning his own pool.

Mr. Conners asks Mr. Lombardo if he has heard any evidence tonight that would lead him to that conclusion other than his own experience. Mr. Lombardo states that it's just his personal experience, and while he's not a professional pool cleaner he believes you need space to do so. Mr. Conners states that while they all have their personal experiences/opinions, that is not the standard for which they review.

Mr. Langello adds on to Mr. Conner's comment in reference to the engineer letter or support, and that that would helpful to have on Mr. Royer's behalf to show the Board a document that gave them that substantial evidence. He states Mr. Royer's response has been that the engineer wouldn't do it or have time for it.

MOTION: The Planning and Development Board finds that all the variance criteria as listed in the guidelines at Land Development Code Section 3.07.03.E have been met and therefore approves

Project No. 2025080063 for a 22.34 left (West) street side setback variance from the minimum required 25 foot street side setback and 1.2 percent lot coverage variance from the maximum allowed 35 percent lot coverage for a pump house at 3 Pelican Lane, subject to the following condition;

a. The applicant will provide a window on the front of the structure for aesthetic purposes only. The window does not have to be operable.

Motion to approve by: Michael Goodman
Seconded by: Anthony Lombardo
Anthony Lombardo – Yes
Dan Wilcox – Yes
Timothy Conner – No
Michael Goodman – Yes
Ron Long – No
Mark Langello (Chair) – No
Motion tied 3-3.

MOTION: The Planning and Development Board finds that all the variance criteria as listed in the guidelines at Land Development Code Section 3.07.03.E have not been met and therefore denies Project No. 2025080063 on the basis that it doesn't meet the minimum relief necessary for a pump house at 3 Pelican Lane. (Parcel No. 23-11-31-5300-00000-0130).

Motion to deny by: Ron Long
Seconded By: Timothy Conner
Anthony Lombardo – Nay
Dan Wilcox – Nay
Timothy Conner – Aye
Michael Goodman – Nay
Ron Long – Aye
Mark Langello (Chair) – Aye
Motion tied 3-3.

Mr. Langello asks to hear from Ms. Spector on guidance of how to proceed. She echoes Mr. Langello's previous comment that we do need a decision tonight from the Board. She states the Mr. Conners' comments were very poignant in pointing out that the Board has asked for competent substantial evidence and not received competent substantial evidence. She states that the attorney that is here is not an expert and he can't speak to these issues as an expert, and that he has not presented anything from an expert that can speak to these matters. She states the Board is solid in a decision to deny this request and she encourages the Board to reconsider their decision in regard to the tie tonight.

Mr. Goodman proposes to meet in the middle and grant a height of 6' for the structure. He states that he is six feet tall and that he could get into a shed 6' tall. He states that he has pool equipment with pumps at least 3' tall. He states lets meet in the middle and put this to bed.

Mr. Langello responds to Mr. Goodman's proposal and states that he still owns a house right on the ocean, significantly closer and he had all his pool equipment/pumps outside of any structure for 15-20 years. He states after time the equipment had rusted out so he built a pumphouse greater is size to what he's asking for and it all rusted out again anyways. He states not to say its not a good thing to enclose it, but that you don't have to enclose the equipment and that they do function with more air without it. Mr. Langello states meeting in the middle may give him what he

doesn't want. Mr. Langello references that there were options available to Mr. Royer to put the structure in a different location that wouldn't have any issue.

Mr. Goodman states that someone could make a motion to approve the height but require the structure to be up against the house. Mr. Long states that he believes this all boils down to the location of the structure. Mr. Goodman suggest this if he wants an affirmative action tonight. Mr. Conner mentions that they have already approved something he didn't want and it was appealed to the Board of County Commissioners and that if they approve something again he doesn't want they will be back here six months from now doing it all over again. He states that he believes they need to act on the application.

Mr. Langello mentions that they have given a lot of leeway here but they also need to consider that the neighborhood keeps showing up and giving their testimony, and that it matters as well. He states as far as he can recall they have heard no positive remarks from the neighborhood in favor of the request and that they have heard no competent substantial evidence that this is really necessary.

Mr. Goodman mentions that he wonders if the objective is to get a screen from the street. Mr. Langello states that he asked this question to the applicant because that was his opinion as well, and if that is the intent he recommends landscaping but he does not believe that it's the only intent here.

The Board asks Mr. Royer to come back up to see if there is a potential compromise or solution. Mr. Royer states that when he went to the engineering draftsmen, they asked if he already had a permit. He states they told him it would costs a few thousand dollars to draft the plans. He states that he did not want to pay that expense and still not get approval. He states he is not open to tearing down the stucco on his house to connect the structure.

Mr. Goodman suggests taking the structure and flipping the location to the back of the property rather than being on the front corner. Mr. Langello clarifies that Mr. Goodman suggested putting the structure along the back property line. Mr. Royer clarifies that he's willing to do that but it's still going to be away from the primary structure, not attached. Mr. Langello asks from clarification from Mr. Royer if he is amendable to what Mr. Goodman is proposing as a compromise. Mr. Royer states yes, to make this work he is but to have a continuance and he will bring forth a presentation to reflect as much.

Ms. Kenny clarifies that if the pumphouse is moved to the rear and put in line with the house, it is going to require an additional rear setback variance. Mr. Langello clarifies to the applicant that what he is asking for, in and of itself, does not meet the requirements, and will require a variance. He states Mr. Royer will modify his original request with another drawing with substantial evidence on his behalf. Mr. Royer states that he understands this but asks the Board what they would like to see in terms of height and that at minimum he could probably go down to 8' high.

Ms. Kenny clarifies that per our code; the definition of height is the mean roof height which is the average between the bottom and the pitch. She states if the Board has something else in mind when discussing the height, they need to clarify that.

MOTION: The Planning and Development Board continues the variance request to give the applicant time to modify the application. Continuing the variance request to the August 11th Planning and Development Board haring will preserve public notice and provide an opportunity for staff or the applicant to provide additional information.

Mr. Langello asks about this side bar happening with Staff. Ms. Spector asks for few minutes to research something brought to their attention.

Ms. Spector clarifies that the concern brought by a member of the public was because the survey was prepared by SWA and signed by Mr. Wilcox, if he should have recused himself like he has done in other cases. She states they have confirmed with Mr. Wilcox and that is their understanding based on the date on the survey that it was not prepared for this variance and as such he had no financial gain from preparation of the survey in advance because of this variance. She clarifies that no recusal was required.

Motion to continue by: Timothy Conner
Second by: Michael Goodman
Anthony Lombardo – Yay
Dan Wilcox – Yay
Timothy Conner – Yes
Michael Goodman – Yes
Ron Long – Yes
Mark Langello (Chair) – Yes
Motion carries unanimously.

6. Staff Comments.

   Ms. Kenny informs the Board of some changes within staff.

7. Board Comments.

8. Public Comments – Each speaker will be allowed up to three minutes to address the Planning and Development Board on any item or topic not on the agenda.

9. Adjournment.
   Motion to adjourn by: Ron Long
   Meeting adjourned at 07:50 P.M.

FLAGLER COUNTY PLANNING AND DEVELOPMENT BOARD
PUBLIC HEARING/AGENDA ITEM NO. 5

SUBJECT: QUASI-JUDICIAL – Project No. 2025080063 – Request for Variances from the Minimum Required Streetside (West) Setback and Maximum Lot Coverage Requirement for a Pump House in the R/C (Residential/Limited Commercial) District at 3 Pelican Lane. Parcel Number: 23-11-31-5300-00000-0130; 7,500+/- square feet (0.17+/- acres). Owners: Raymond R. Royer, Jr., and Janice L. Paxson/Applicant: Raymond R. Royer, Jr. (AR No. 5921). (TRC,*PDB*)

DATE OF MEETING: August 11, 2026

OVERVIEW/SUMMARY: This request is quasi-judicial in nature and requires disclosure of ex parte communication. The request is for approval of variances from the minimum required left streetside (West) setback and from the maximum allowed lot coverage in the R/C (Residential/Limited Commercial) District. The subject parcel is located West of North Oceanshore Boulevard at 3 Pelican Lane:



On August 22, 2025 Mr. Royer submitted a new application for variances from the minimum required left streetside (West) setback and maximum allowed lot coverage for

a proposed pump house in the R/C District. This request is a before-the-fact variance request, preceding the application for a building permit.

This property is subject to Planning and Development Board Order No. 5274 recorded in Official Records Book 2942, Page 668, Public Records of Flagler County, Florida. It was heard at the February 11, 2025 Planning and Development Board Meeting.

The order granted a series of variances to allow for the construction of the a pool, pool deck, and pump house within the street side (West) setback subject to the condition that the pump house have a height no greater than four (4) feet and be located within the walled-in area.

The owner appealed the condition to Board of County Commissioners at the May 5, 2025 Regular Meeting. The Board voted unanimously to deny the appeal.

The owner then submitted another application with new variance requests pertaining to the pump house (Project No. 2025050045) on May 22, 2025. This application was heard at the July 8, 2025 Planning and Development Board Regular Meeting. A motion to approve failed 2-2. A subsequent motion to continue the request to the August 12, 2025 Regular Meeting with the Board requesting more information passed unanimously.

Following the meeting, staff determined that a tie-vote is a failed vote on the motion, and ultimately is a denial. After informing the applicant, he elected to submit a new application with the same variance requests (Project No. 2025080063). This item, containing the same material variance requests, was heard at the September 9, 2025 Planning and Development Board Regular Meeting. A motion to approve the requests failed 3-3 and was therefore denied.

Mr. Royer then appealed Project No. 2025080083 to the Board of County Commissioners at the January 12, 2026 Regular Meeting. The Board found that a tie-vote was not a basis for denial because it was not competent substantial evidence and remanded the item back to the Planning and Development Board.

Mr. Royer then requested this item be placed on the April 14, 2026 Planning and Development Board Agenda following the March 18, 2026 Technical Review Committee meeting.

The application was heard at the April 14, 2026 Planning and Development Board Regular Meeting. A motion to approve failed 3-3. A subsequent motion to deny failed 3-3. The Board was reminded by Staff that a motion cannot end in a tie, and we will need a decision on this item. Following Board discussion with the Applicant regarding a possible compromise on the request, it was suggested that the Applicant move the structure to the rear of the property in line with the house (potentially requiring an additional variance). A

final motion to continue the request to the August 11, 2026 Regular Meeting with the Applicant requesting more time passed unanimously.

The subject property is described as Lot 13 and the South 8 feet of Lot 16 of River Beach subdivision, according to the map or plat thereof as recorded in Plat Book 5, Page 36, Public Records of Flagler County, Florida.

Public notice has been provided for this application according to Flagler County Land Development Code Section 2.07.00. Public comments have been received and public comments related to the previous application pertaining to this property (Project No. 2025050045) can be found in the August 12, 2025 Published Agenda or as part of the Record.

This agenda item is:
__X__ quasi-judicial, requiring disclosure of ex-parte communication; or
_____ legislative, not requiring formal disclosure of ex-parte communication.

OPTIONS FOR THE BOARD:

APPROVAL: The Planning and Development Board finds that all the variance criteria as listed in the guidelines at Land Development Code Section 3.07.03.E. have been met and therefore approves Project No. 2025080063 for a 22.34 left (West) street side setback variance from the minimum required 25 foot street side setback and 1.2 percent lot coverage variance from the maximum allowed 35 percent lot coverage for a pump house at 3 Pelican Lane (Parcel No. 23-11-31-5300-00000-0130).

DENIAL: The Planning and Development Board finds that all the variance criteria as listed in the guidelines at Land Development Code Section 3.07.03.E. have not been met and therefore denies Project No. 2025080063 for a 22.34 left (West) street side setback variance from the minimum required 25 foot street side setback and 1.2 percent lot coverage variance from the maximum allowed 35 percent lot coverage for a pump house at 3 Pelican Lane (Parcel No. 23-11-31-5300-00000-0130).

ATTACHMENTS: *Use this link to view attachment(s)*
1. Technical Staff Report
2. Application and supporting documents
3. September 9, 2025 Planning and Development Board Minutes (in part)
4. Planning and Development Board Order No. 5291
5. January 12, 2026 Board of County Commissioners Regular Meeting Minutes (in part)
6. Board of County Commissioners Order No. 6024
7. April 14, 2026 Planning and Development Board Minutes
8. Public Notice
9. Public Comment

PROJECT NO. 2025080063
STREETSIDE VARIANCE IN THE R/C DISTRICT
3 PELICAN LANE
TECHNICAL STAFF REPORT

Project No./AR No.: 2025080063/5921

Address: 3 Pelican Lane

Owners: Raymond R. Royer, Jr., and Janice L. Paxson

Applicant: Raymond R. Royer Jr.

Parcel No.: 23-11-31-5300-00000-0130

Parcel Size: 7,500+/- square feet

Legal Description:
Lot 13 and the South 8 feet of Lot 16, River Beach, according to the map or plat thereof as recorded in Plat Book 5, Page 36, Public Records of Flagler County, Florida.

Existing Zoning and Land Use Classification:
Zoning: R/C (Residential/Limited Commercial) District
Land Use: Mixed Use: Low Density

Future Land Use Map Classification/Zoning of Surrounding Land:
North: Mixed Use: Low Density/R/C (Residential/Limited Commercial) District
East: Mixed Use: Low Density/R/C (Residential/Limited Commercial) District
South: Pelican Lane; Mixed Use: Low Density/R/C (Residential/Limited Commercial) District
West: Mockingbird Lane; Residential: Low Density Rural Estate/R-1 (Rural Residential)

Flagler County Land Development Code (FCLDC) Sections Affected: Section 3.02.04, *Lots of Record*; Section 3.03.13, *R/C – Residential/Limited Commercial District*; Section 3.07.03, *Procedure for variances and special exceptions*; and Section 3.07.03.E, *Variance guidelines*.

FCLDC Sec. 3.03.13.E.2 – Minimum Setback Requirements for Structures (for the R/C District):

Front yard —Thirty-five (35) feet if property depth exceeds one hundred (100) feet.
—Twenty-five (25) feet if one hundred (100) feet or less.
Rear yard — Twenty (20) feet.
Side yard interior lot — Seven and a Half (7.5) feet.
Abutting any street — Twenty-five (25) feet.

Maximum lot coverage: The total lot area covered with principal and accessory buildings shall not exceed thirty-five (35) percent.

FCLDC Sec. 3.02.04.G – Lots of Record

Front Yard—25 feet
Rear Yard—20 feet
Side Yard—7.5 feet
Street Side Yard—20 feet

Summary of the Request:
The owner is seeking a new street side setback variance and lot coverage variance for a proposed pump house to supersede the variance approvals granted through Planning and Development Board Order No. 5274, recorded in Official Records Book 2942, Page 668, Public Records of Flagler County, Florida, at the February 11, 2025 Planning and Development Board Meeting.

Planning and Development Board Order No. 5274 granted a 25 foot street side (West) yards setback variance from the minimum required 25 foot street side setback for a pool and pool deck; a 3.49 foot rear (North) yard setback variance from the minimum required 10 foot rear setback for a pool and pool deck; a 23 foot street side setback (West) yard setback variance from the minimum required street side setback for a pump house; and a 0.82 percent variance from the maximum 35 percent lot coverage in the R/C (Residential/Limited Commercial Use) district subject to the condition that the pump house be within the walled-in area of the pool and pool deck, and with its height not to exceed four (4) feet.

The owner submitted an application to Appeal the Planning and Development Board's Decision regarding the pump house maximum height condition. The Appeal was heard by the Flagler County Board of County Commissioners at the May 5, 2025 Regular Meeting. The Commission voted unanimously to deny the appeal on the basis that the Planning and Development Board's decision was supported by competent substantial evidence, that due process was accorded to the applicant, and the essential requirements of the law, primarily the four criteria for variances within the LDC, had been observed.

Although the appeal was denied, FCLDC Sec. 3.07.03 – *Procedure for variance and special exception* – does not prohibit a property owner or applicant from modifying or reapplying for a variance following an undesired condition or denial. This notably differs from LDC Sec. 3.07.05.G – *Procedures for requesting a rezoning – Frequency of application* – which states that a property owner shall not initiate action affecting the same parcel of land more often than once every six months. The property owner has elected to submit a new variance application.

The owner submitted the new variance application (Project No. 2025050045) on May 22, 2025. The request was to place a pump house, with a base of 12 feet by 8 feet, with a height of 7 feet 6 inches (measured at 9 feet 3 inches at the peak of the roof), 2 feet 8 inches from the left (West) street side property line. The pump house would abut the front (South) yard setback line and be located 3 feet 4 inches from the southwest corner of the existing dwelling. The applicant has submitted various digital renderings to showcase that the pump house would be designed and built to be consistent with the character of the existing dwelling.

The requested variances were for a 22.34 left (West) street side setback variance from the minimum required 25 foot street side setback (0.66 feet less than the previously approved 23 foot street side setback) and a 1.2 percent lot coverage variance (0.38 percent more than the previously approved 0.82 percent lot coverage variance). The increase in lot coverage is due to the proposed pump house dimensions increasing from 12 feet by 6 feet to 12 feet by 8 feet. The approval of the new variance requests would supersede the previous variance requests for the pump house as well as the Board's condition to limit the height to four (4) feet and locate it within the walled-in area. The previous variance requests for the pool and pool deck would remain valid.

The May 22, 2025 application was heard at the July 8, 2025 Planning and Development Board Regular Meeting. A motion to approve failed through a 2-2 tie vote. A subsequent motion to continue the request to the August 12, 2025 Regular Meeting with the Board requesting more information passed unanimously.

At the August 12, 2025 Regular Meeting, a motion to approve again failed through a 2-2 tie vote. At staff's request for a decision that would yield an affirmative (passed) motion, a motion to continue the request to the September 9, 2025 Regular Meeting passed unanimously.

Following the meeting, staff determined that a tie vote is a failed vote, and ultimately is a denial of the application request. After being informed of this determination, the applicant elected to submit a new application with the same variance requests. Because the application has not materially changed, staff did not require the application to be reviewed by the Technical Review Committee (TRC) again.

The new request (Project No. 2025080063) was heard at the September 9, 2025 Planning and Development Board regular meeting. A motion to approve failed 3-3 and was therefore denied.

The applicant then appealed the denial to the Board of County Commissioner's at the January 12, 2026 Regular Meeting. The Board found that a tie-vote was not a basis for denial because it was not competent substantial evidence and remanded the item back to the Planning and Development Board.

The application was heard at the April 14, 2026 Planning and Development Board Regular Meeting. A motion to approve failed 3-3. A subsequent motion to deny failed 3-3. The Board was reminded by Staff that a motion cannot end in a tie, and we will need a decision on this item. Following Board discussion with the Applicant regarding a possible compromise on the request, it was suggested that the Applicant move the structure to the rear of the property in line with the house (potentially requiring an additional variance). A final motion to continue the request to the August 11, 2026 Regular Meeting with the Applicant requesting more time passed unanimously.

The subject property is 7,500+/- square feet in size having a width of 100 feet and a depth of 75 feet, and is described as Lot 13 and the South 8 feet of Lot 16, River Beach, according to the map or plat thereof as recorded in Plat Book 5, Page 36, Public Records of Flagler County, Florida.

According to the plat of River Beach, Lot 13 and the 8 southerly feet of Lot 16 are depicted as (at Map Book 5, Page 36, Public Records of Flagler County, Florida):

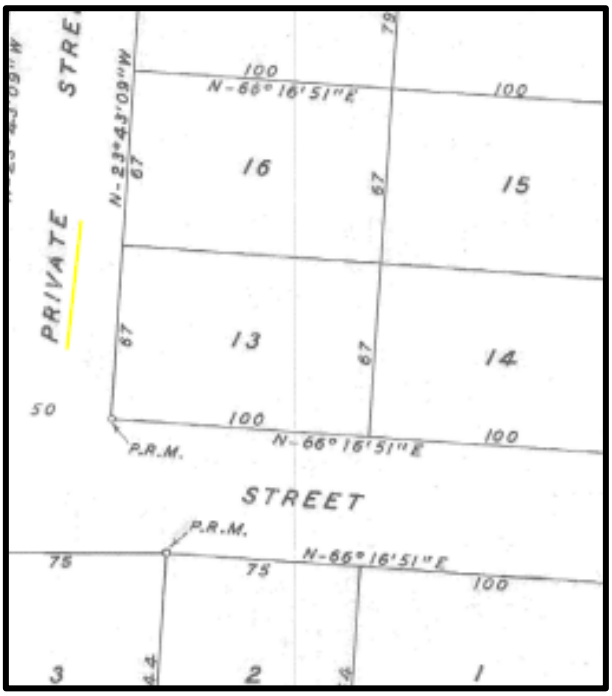

According to the Flagler County Property Appraiser records, the existing nonconforming dwelling was built in 1979, predating the adoption of the Flagler County Land Development Code. The owners, Mr. Royer and Ms. Paxson, purchased the property though a Warranty Deed dated September 22, 2017, and recorded in Official Records Book 2231, Page 845, Public Records of Flagler County, Florida.

A 1978 Warranty Deed – from Albert G. and Leola R. Jones to Bertis W. and Alma M. Harris – dated January 3, 1978 and recorded on January 9, 1978 at Official Records Book 98, Page 436, Public Records of Flagler County, Florida, conveyed all three lots – Lots

13, 16, and 23 – together as a single parcel. The parcel's present configuration – with all of Lot 13 and the South 8 feet of Lot 16 – was conveyed – through the Warranty Deed from Bertis W. and Alma M. Harris to Edwin and Patricia Friday dated March 5, 1979 and recorded on March 6, 1979 at Official Records Book 117, Page 673, Public Records of Flagler County, Florida – just over a year later, and generally coinciding with the timing of the construction of the single-family dwelling.

The owner has not begun the permitting process to build the pool, pool deck, or pump house. This is a before-the-fact variance request.

Variance Guideline Analysis:
LDC Section 3.07.03.E, *Variance guidelines,* states that a variance may be granted only upon a finding by the Planning and Development Board that all of the criteria listed in the guidelines have been found in favor of the applicant and that a literal enforcement of the provisions of this article will result in an unnecessary hardship. These criteria are listed followed by the applicant's statements (included below and attached in their entirety) and staff's analysis:

1. *There are extraordinary and exceptional conditions pertaining to the particular piece of property in question because of its size, shape, topography, or other unique features that, when considered in whole or in part, creates an unnecessary hardship; and*

   Applicant's response: Subject to hardship due to sqft being undersized to meet 9,000 sqft guildlines. This property is a corner lot that is undersized as hugely burden by zoning setbacks for 9,000 sqft properties.

   Staff analysis: The subject property is an undersized Lot of Record being part of the River Beach subdivision dating back to 1959 and being approximately 1,500 square feet under the minimum lot size of 9,000 square feet in the R/C district.

2. *Such conditions were not created by the affirmative actions of the applicant and the applicant has acted at all times in good faith; and*

   Applicant's response: I've been in good faith by first applying for this applications. All other permitting for electric, plumbing to building will be apply for in separate application in good faith.

   Staff analysis: This is a before-the-fact variance request, and the applicant is seeking permission before applying for a building permit.

3. *The variance, if granted, would not cause substantial detriment to the public health, welfare, safety, and morals of the community or impair the purpose and intent of this article; and*

   Applicant's response: This proposal don't cause no detriment to the public health, welfare, safety and morals of the community of Riverbeach Subd. The proposal does not impair anyone's views of the subd. Amenities of the River or Beach in our convants [illegible].

   Staff analysis: The granting of a variance will not cause substantial detriment to the public health, welfare, safety, and morals of the community. The applicant has submitted renderings showing that the pump house will be designed and built to be consistent with the existing dwelling.

4. *No variance may be granted for a use of land or building that is not permitted by this article.*

   Applicant's response: Shed permitting policy April 17, 2012 sheds 61 sq ft to 100 sq ft. The proposals are 72 to 92 sq ft pool house shed.

   Staff Analysis: Pools, pool decks, and pump houses are permitted accessory uses and structures within the R/C zoning district.

A variance, if granted, shall be the minimum variance necessary to alleviate the hardship. For purposes of this section, an unnecessary hardship shall mean that without the granting of the variance the owner will be deprived of all reasonable use of the property as allowed in the zoning district.

Applicant response: Refer to section 3. And without a hardship and variance granted the applicant will be deprived of all safe reasonable use of the property.

Staff Analysis: The newly proposed location of the pump house reduces the necessary relief for the street side setback but increases the necessary relief for lot coverage. The current four-foot height limitation does reduce the accessibility and use of the pump house. While the requested variances are before-the-fact and the property is an undersized Lot of Record, the hardship is self-created.

Future Land Use Map

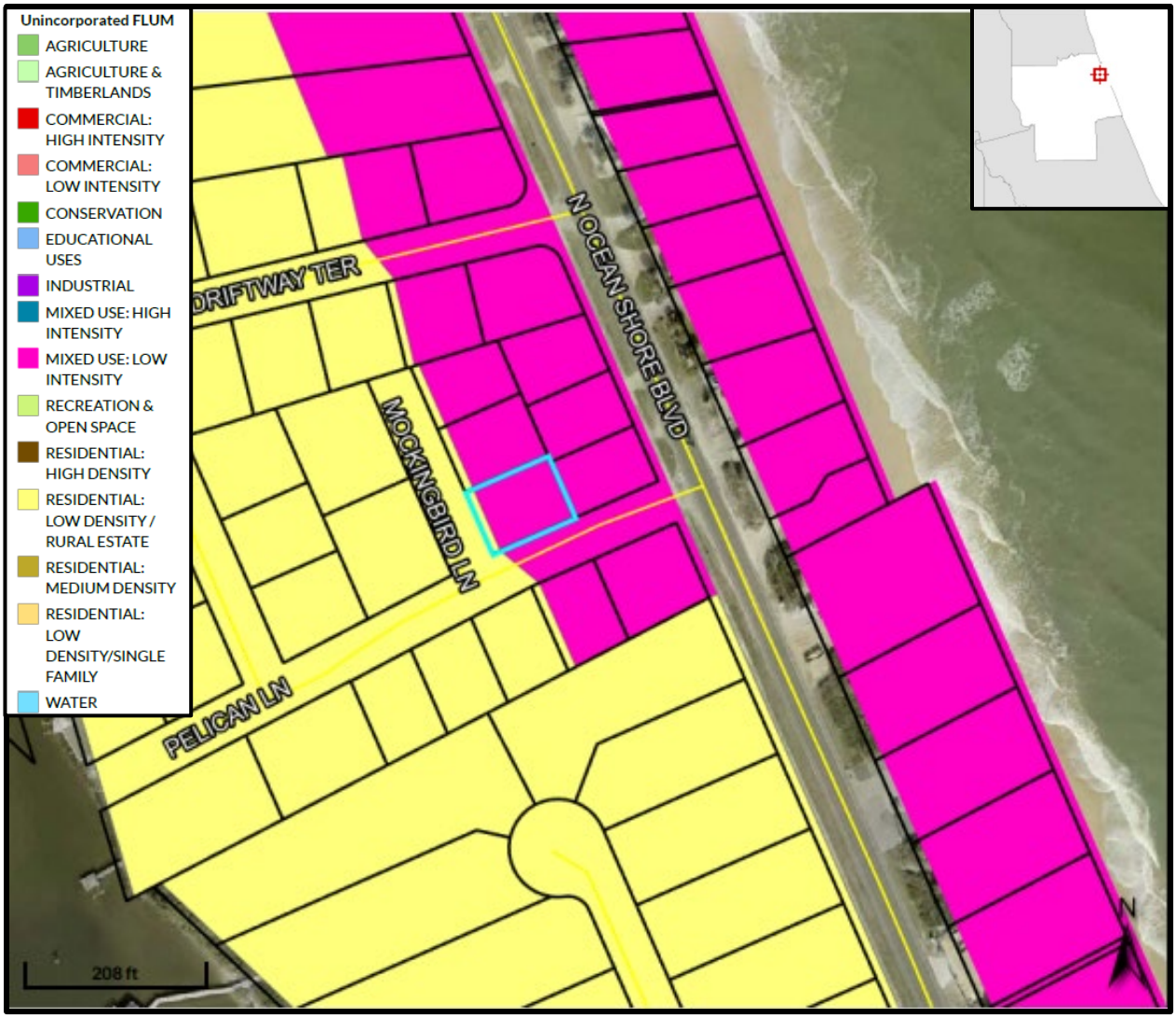

Zoning Map


RESIDENTIAL/COMMERCIAL
RESIDENTIAL/COMMERCIAL
NTIAL
N OCEAN SHORE BLVD
DRIFTWAY TER
RESIDENTIAL/COMMERCIAL
RURAL RESIDENTIAL
MOCKINGBIRD LN
RESIDENTIAL/COMMERCIAL
RESIDENTIAL/COMMERCIAL
PELICAN LN
RURAL RESIDENTIAL
URBAN SINGLE-FAMILY RESIDENTIAL
RURAL RESIDENTIAL
URBAN SINGLE-FAMILY RESIDENTIAL
URBAN SINGLE-FAMILY RESIDENTIAL
208 ft
N

Flood Zone Map

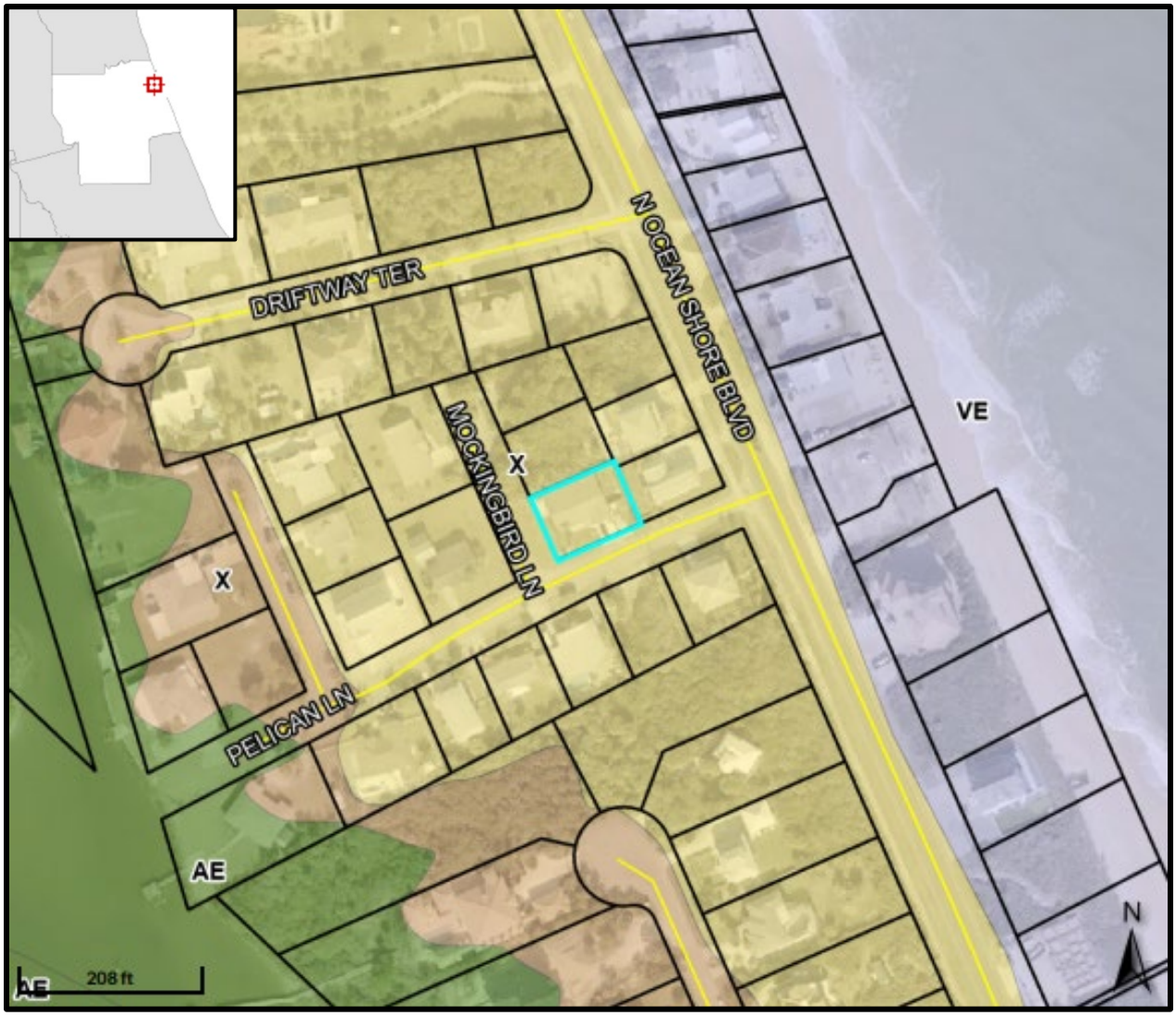

Soils


35
Quartzipsamments, dredged
31 Plam Beach gravelly sand, 0 to 8% slopes
32 Narcrossee, shell subtratum-Welaka complex, 0 to 5% slopes
DRIFTWAY TER
N OCEAN SHORE BLVD
MOCKINGBIRD LN
PELICAN LN
32
33
35
31
26
99
32
26
208 ft
N

Wetlands

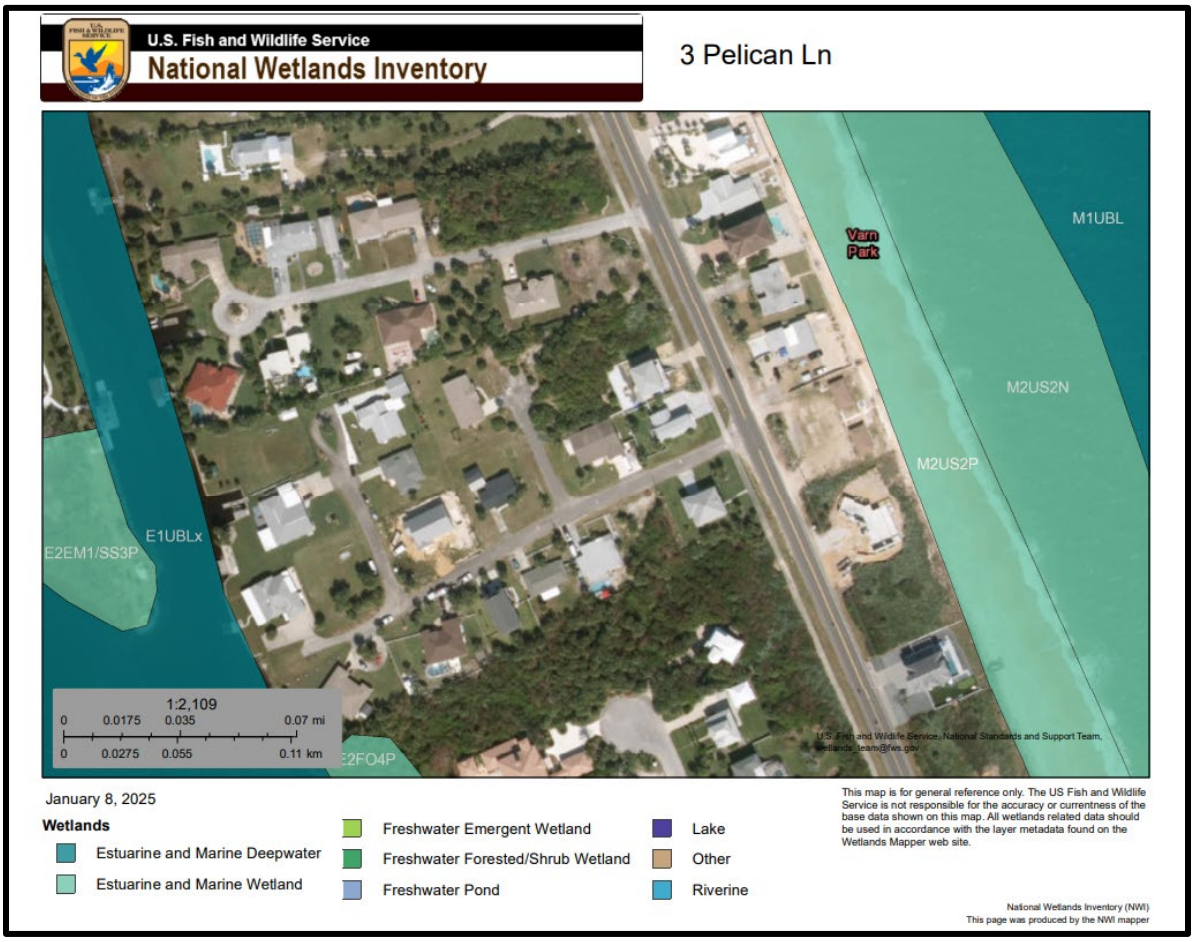
U.S. Fish and Wildlife Service
National Wetlands Inventory
3 Pelican Ln
M1UBL
Varn Park
M2US2N
M2US2P
E1UBLx
E2EM1/SS3P
E2FO4P
1:2,109
0 0.0175 0.035 0.07 mi
0 0.0275 0.055 0.11 km
U.S. Fish and Wildlife Service, National Standards and Support Team, wetlands_team@fws.gov
January 8, 2025
Wetlands
Estuarine and Marine Deepwater
Estuarine and Marine Wetland
Freshwater Emergent Wetland
Freshwater Forested/Shrub Wetland
Freshwater Pond
Lake
Other
Riverine
This map is for general reference only. The US Fish and Wildlife Service is not responsible for the accuracy or currentness of the base data shown on this map. All wetlands related data should be used in accordance with the layer metadata found on the Wetlands Mapper web site.
National Wetlands Inventory (NWI)
This page was produced by the NWI mapper

APPLICATION FOR VARIANCE

FLAGLER COUNTY, FLORIDA
1769 E. Moody Blvd, Suite 105
Bunnell, FL 32110
Telephone: (386) 313-4009 Fax: (386) 313-4109

Application/Project #: _____

PROPERTY OWNER(S)			
Name(s):	RAYMOND R ROYER JR.		
Mailing Address:	3 PELICAN LANE		
City:	FLAGLER BEACH	State: FLORIDA	Zip: 32136
Telephone Number	(610) 636-5826	Fax Number	

APPLICANT/AGENT			
Name(s):	RAYMOND R. ROYER JR.		
Mailing Address:	3 PELICAN LANE		
City:	FLAGLER BEACH	*State:* FLORIDA	*Zip:* 32136
Telephone Number	(610) 636-5826	*Fax Number*	
E-Mail Address:	fatboy6@ptd.net		

SUBJECT PROPERTY		
SITE LOCATION (*street address*):	3 PELICAN LANE: WEST SIDE INCLUDING NORTH AND SOUTH	
LEGAL DESCRIPTION: *(briefly describe, do not use "see attached")*	POOL HOUSING STRUCTURE 92 sqft. 8' W x 12' L x 9'7" HEIGHT AT PEEK OF GABLE ROOF	
Parcel # (*tax ID #*):	23-11-31-5300-00000-0130	
Parcel Size:	7,499,556	
Current Zoning Classification:	SINGLE FAMILY RC-1	
Current Future Land Use Designation	SINGLE FAMILY	
Subject to A1A Scenic Corridor IDO?	☐ YES	☒ NO

Relief Requested: HARDSHIP RELIEF ON UNDERSIZE LOT, VARIANCE RELIEF FOR POOL HOUSING STRUCTURE ON HEIGHT ~~AND PERIMETER~~ OR ROOF COVERAGE

R R R Jr. 8/22/2025
Signature of Owner(s) or Applicant/Agent Date
if Owner Authorization form attached

****OFFICIAL USE ONLY****

PLANNING BOARD RECOMMENDATION/ACTION:

APPROVED [ ]
*APPROVED WITH CONDITIONS [ ]
DENIED [ ]

Signature of Chairman: _____

Date: _____ *approved with conditions, see attached.

NOTE: The applicant or a representative, must be present at the Public Hearing since the Board, at its discretion, may defer action, table, or take decisive action on any application. Rev. 09/16

APPLICATION FOR VARIANCE

FLAGLER COUNTY, FLORIDA
1769 E. Moody Blvd, Suite 105
Bunnell, FL 32110
Telephone: (386) 313-4009 Fax: (386) 313-4109

Subject Property: 3 PELICAN LANE, FLAGLER BEACH

E. *Variance guidelines.* A variance may be granted, upon application, from the terms and provisions of this article as will not be contrary to the public health, safety, welfare and morals where, owing to special conditions, a literal enforcement of the provisions of this article will, in an individual case, result in unnecessary hardship. Such variances may be granted by the planning board in such individual case of unnecessary hardship upon a written finding that: HARDSHIP ON 7,499. SSG UNDERSIZED LOT. THIS POOL HOUSING STRUCTURE WILL ADD PUBLIC HEALTH & SAFTY TO WELFARE.

1. There are extraordinary and exceptional conditions pertaining to particular piece of property in question because of its size, shape, topography, or other unique features that, when considered in whole or part, creates an unnecessary hardship; and HARDSHIP DUE TO UNDERSIZE LOT SQFT. IN MEETING THE 9,000 SQFT. GUIDLINES, THIS PROPERTY IS A CORNER LOT AND IS UNDER BURDENSOME IN TRYING TO MEET THE NEW 9,000 SQFT GUIDELINES SET BY ZONING & PLANNING.

2. Such conditions were not created by the affirmative actions of the applicant and the applicant has acted at all times in good faith; and I'VE ALWAYS BEEN IN GOOD FAITH AND HAVE TRIED TO MEET SUGGESTIONS BY THE ZONING & PLANNING BOARD. I BELIEVE THAT ALL SUGGESTIONS HAVE BEEN EXHAUSTED. THIS NEW APPLICATION IS THE BEST SUITED FOR THE INSTALL OF ELECTRICAL TO MOTORIZED COMPONENTS AND MAINTENCE TO KEEPING OUT OF THE WEATHER.

3. The variance, if granted, would not cause substantial detriment to the public health, welfare, safety, and morals of the community or impair the purpose and intent of this article; and THIS PROPOSAL DON'T CAUSE NO DETRIMENT TO THE PUBLIC HEALTH OR SAFTY WELFARE. THIS PROPOSAL DOES NOT IMPAIR ANYONE'S VEIWS OF THE SUBDIVSION TWO AMENITES OF RIVER BEACH COMMUNITY, THE COVANTS ARTICLES AND RESTRICTIONS FROM 1959 IS ON PROPERTY LINES 4' HEIGHT RESTRICTION.

4. No variance may be granted for a use of land or building that is not permitted by this article.

THIS POOL HOUSING MEETS SHED PERMITING POLICY APRIL 17, 2012 OF 121 SQFT. TO 100 SQFT. IN BOTH CASES NEITHER HAVE TO FULLY DIVULGE WHAT THE STRUCTURE USE WILL HOUSE. I'VE HAVE IN GOOD FAITH FULLY DIVULGE MY INTENSION OF USE AND WILL SUMMITT PROPER PERMITS.

A variance, if granted, shall be the minimum variance necessary to alleviate the hardship. For purposes of this section, an unnecessary hardship shall mean that without the granting of the variance the owner will be deprived of all reasonable use of the property as allowed in the zoning district. WITHOUT HARDSHIP AND VARIANCES BEING GRANTED TO BUILD OF SAFE POOL HOUSING FOR MY FAMILY AND SUBDIVISION COMMUNITY, THIS STRUCTURE IS BEING BUILT TO MATCH MY HOME TO ADD FUTURE VALUE FOR MY FAMILY AND FOR RIVER BEACH SUBDIVISION.

NOTE: The applicant or a representative, must be present at the Public Hearing since the Board, at its discretion, may defer action, table, or take decisive action on any application. Rev. 09/16

Instrument No: 2017033195 9/22/2017 4:29 PM BK: 2231 PG: 845 PAGES: 2 DOCTAX PD $2,660.00
RECORDED IN THE OFFICIAL RECORDS OF Tom Bexley, Clerk of the Circuit Court & Comptroller Flagler, FL

Prepared by and return to:
Seth D Corneal
Manager/Member
First Shore Title LLC
509 Anastasia Blvd
Saint Augustine, FL 32080
904-687-2247
File Number: **FS17-015**
Will Call No.:

Parcel Identification No. **23-11-31-5300-00000-0130**

[Space Above This Line For Recording Data]

Warranty Deed

(STATUTORY FORM - SECTION 689.02, F.S.)

This Indenture made this **22nd** day of **September, 2017** between **Harold Arthur Kretzer and Lori Ann Kretzer** whose post office address is **PO Box 1788, Bunnell, FL 32110-1788** of the County of **Flagler**, State of **Florida**, grantor*, and **Raymond R. Royer, Jr. and Janice L. Paxson**
whose post office address is **3 Pelican Lane, Flagler Beach, FL 32136** of the County of Flagler County, State of **Florida**, grantee*,

Witnesseth that said grantor, for and in consideration of the sum of TEN AND NO/100 DOLLARS ($10.00) and other good and valuable considerations to said grantor in hand paid by said grantee, the receipt whereof is hereby acknowledged, has granted, bargained, and sold to the said grantee, and grantee's heirs and assigns forever, the following described land, situate, lying and being in **Flagler County, Florida**, to-wit:

Lot 13 and the South 8 feet of Lot 16, River Beach, according to the map or plat thereof as recorded in Plat Book 5, Page 36, Public Records of Flagler County, Florida.

and said grantor does hereby fully warrant the title to said land, and will defend the same against lawful claims of all persons whomsoever.

* "Grantor" and "Grantee" are used for singular or plural, as context requires.

In Witness Whereof, grantor has hereunto set grantor's hand and seal the day and year first above written.

Signed, sealed and delivered in our presence:

Witness Name: SETH D. CORNEAL

Karen Jennifer Cook
Witness Name: Karen Jennifer Cook

Harold Arthur Kretzer (Seal)

Witness Name: SETH D. CORNEAL

Karen Jennifer Cook
Witness Name: Karen Jennifer Cook

Lori Ann Kretzer (Seal)

Unofficial Copy

DoubleTime®

State of Florida
County of Saint Johns

The foregoing instrument was acknowledged before me this 22nd day of September, 2017 by Harold Arthur Kretzer and Lori Ann Kretzer, who [_] are personally known or [X] have produced a driver's license as identification.

[Notary Seal]

Notary Public

Printed Name: SETH D. CORNEAL

My Commission Expires: APRIL 30, 2018

SETH DAVID CORNEAL
MY COMMISSION # FF 113594
EXPIRES: April 30, 2018
Bonded Thru Budget Notary Services

Unofficial Copy

NOTE:
1. Fence gates installed on both ends of patio
2. Width of patio not too exceed 18'-6" to ensure property line is withheld

WOODED AREA

10' 5' 10'

50' Right of Way

25' Center of Road

20'-6"

GRASS

DECK

3 Pelican Lane

48' 40'

9' x 14'

5'

4'

12' x 8' x 7'-6"
9'-3" Roof Peak

7'-5"

PROPERTY LINE TO WALL 2'8"

MOCKINGBIRD LANE

* Pump House extends 2' beyond the house

25' 27'

Pump House View 1



10' Easement



Pump House View 2

50' Right of Way

30' 15'

PELICAN LANE

N

2147

Sheet Title

Designed by | Created by | Checked by

731 Industrial Court, Cherryville PA
6108496791
Anthony@fsdesignsolutions.com

3 Pelican Lane
Flagler Beach FL

5/3/2025 Date
2147 Job Number
001 File Number

1 of 3

ADDRESS: 3 PELICAN LANE

JOB #24-3014

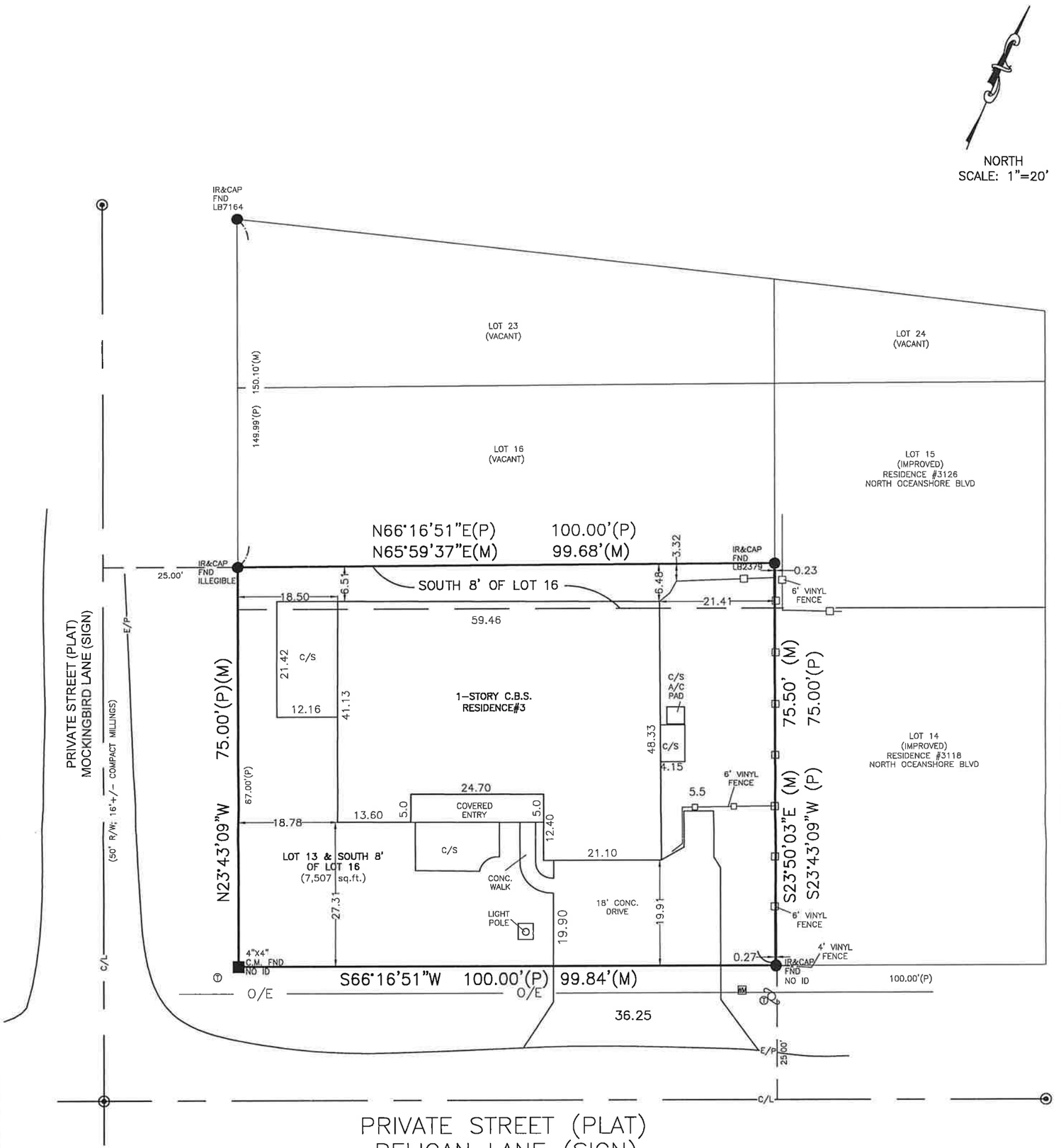

PRIVATE STREET (PLAT)
PELICAN LANE (SIGN)
(50' R/W; 28' SHELL ROAD)

REVISIONS:
--

TYPE OF SURVEY: BOUNDARY / LOCATION
NOTE: THIS SURVEY IS VALID NO MORE THAN 90 DAYS FROM DATE OF LAST FIELD WORK

DESCRIPTION: LOT 13 AND THE SOUTH 8 FEET OF LOT 16, RIVER BEACH SUBDIVISION, ACCORDING TO THE PLAT THEREOF, RECORDED IN MAP BOOK 5, PAGE 37, OF THE PUBLIC RECORDS OF FLAGLER COUNTY, FLORIDA.

LEGEND:

O IR	1/2" Iron Rod set "LB7672"	(D)	Deed Bearing & Distance	PT	Point of Tangency	A/C	Air Conditioner Pad
● IR	5/8" Iron Rod found	(P)	Plat Bearing & Distance	PI	Point of Intersection	EQP	Pool Equipment Pad
● IP	1/2" Iron Pipe	(M)	Measured Bearing & Distance	U.E.	Utility Easement	PEP	Pretreatment Effluent Pumping Tank
O N/D	Nail and Disk set "LB7672"	(C)	Calculated Bearing & Distance	D.E.	Drainage Easement		
● N/D	Nail and Disk found	C/L	Center Line	L.E.	Landscape Easement	O/E	Overhead Electric
◉ PCP	Permanent Control Point	E/P	Edge of Pavement	N.G.V.D.	National Geodetic Vertical Datum		P/P – Power Pole
□ CM	Concrete Monument set	E/R	Edge of Road	N.A.V.D.	North American Vertical Datum	Ⓜ	Manhole
■ CM	Concrete Monument found	R/W	Right of Way	MSL	Mean Sea Level	Ⓣ	Telephone Riser
PRM	Permanent Reference Monument	Δ	Delta	B.M.	Bench Mark		Cable Television Riser
FND	Found	R	Radius	T.B.M.	Temporary Bench Mark	Ⓕ	Fiber Optic Riser
LB	Licensed Business	L	Length	TOB	Top Of Bank	WM	Water Meter
LS	Licensed Surveyor	CB	Chord Bearing	TOE	TOE of slope		Electric Meter
PSM	Professional Surveyor & Mapper	CH	Chord Distance	F.F.	Finish Floor Elevation		Fire Hydrant
O.R.	Official Records Book	PC	Point of Curvature	INV.	Invert		Water Valve
PG.	Page	PRC	Point of Reverse Curvature	C.B.S.	Concrete Block & Stucco		Wood Fence
		N.R.	Non-Radial Curve	Conc.	Concrete		Vinyl Fence
				C/S	Concrete Slab		Chain Link Fence

NOTES:
1. The entire map encompassing this survey is recorded in Map Book 5, Pages 36-37.
2. No elevations shown on survey.
3. Underground improvements and utilities not located.
4. Bearings refer to plat datum and to the centerline of PELICAN LANE as being N23°43'09"W.
5. Description provided by client.
6. No search for encumbering instruments was made by surveyor.
7. Error of closure meets or exceeds 1:7500 feet.
8. Fences shown are located with an accuracy of ±0.2'.

CLIENT INFO
RAYMOD ROYER
3 PELICAN LANE
PALM COAST, 32136

STEPHENSON, WILCOX & ASSOCIATES, INC. CA#27726·LB#7672
2729 E. Moody Blvd., Ste. 400
PO Box 186 Bunnell FL 32110
Phone: 386.437.2363 · Email: info.swa@gmail.com
CIVIL ENGINEERS • LAND SURVEYORS • CONSULTANTS • PLANNERS

JOB TYPE:	FIELD DATE	OFFICE DATE	JOB NO.	BY:
Boundary	07/17/24	07/31/24	24-3014	MM
Site Plan				
House Stake				
Formboard				
Foundation				
Final				

I hereby certify that the survey represented hereon meets or exceeds the minimum standards established pursuant to Section 472.027, Florida Statutes, and adopted in Chapter 5J-17 Florida Administrative Code.

07312024

DAN A. WILCOX Jr., PSM No.5749, PE No. 57633
Not valid without the signature and the original raised seal of a Florida Licensed surveyor and mapper.

SHEET 1 of 1

\\Mycloudpr4100\swa-01\CAD SERVER 2014NOV12\SWA\Cad Server\sdsk projects\0000-Flagler\000-PLATS\RiverBeach\Lot 13.dwg

From:	Ray
To:	Simone Kenny, AICP
Subject:	Re: August 12, 2025 Planning and Development Board Agenda
Date:	Friday, August 29, 2025 4:03:42 PM

Hello Simone ,

I only have an ordinance document of 2012 for building a small, medium or large second detached structure on one's property. My application renewal states the medium size of 62 sqft. to 100 sqft.. I seem to have trouble reaching what are the minimum height required for small , medium or large sized structures.

Plus I've had two different applications with a work shop of some departments present to Adam Mengal stating my request can reach the height up to 12' and any further needs I believe another variance request.

So as of now I've been approved for the 12' L x 8' W to the 9'7" H being restricted to 4' minimum height. So where is members of the Zoning and Planning Board arriving on such 4' restricted height. This restriction will bring hardships for installing the mechanical equipment and to safely maintain and make repairs.

This wasn't brought up in early statements in front of the Zoning and Planning but was at earlier workshops. At these workshops I was directed by staff many of these components will need permits after building the Pool House structure.

Examples : like plumbing to electrical and to meeting all building codes for the requested structures including the 4' wall to pool and 12' L x 8' W x 9' 7" H of building structure for the Pool House.

I've tried to reach other placements for the Pool House to reach only further hardships by elements of existing home construction to going outside recommended engineering specifications for the installation of the swimming jets system.

To the Height I requested earlier for 10' variance but trying to attain the 9'7" to hopefully not exceed after final roofing material is completed. I will also state that if possible to go lower than 9'7" if it brings a better matching of the gable roof on the main residence home. I've also stated from the previous review hearing that this Pool House will match my residential home.

Examples: Will be on a code approved 12' L x 8 ' W slab foundation and 8' wall matching block. The gable roof will match but may be a metal roof application.

I've always been in good faith about this application request and have shared above information than really required.

FYI : To Dan statements of Chris from a Manufacturer Distributor Wholesaler. Chris basically stated on my follow up he had a general conversation about the installation of the swimming jets system. Chris stated after learning about my environment of salt air and weather conditions. Chris stated in housing the system will bring less maintenance repairs to better conditions for longer operational periods.

Chris stated he never recommended any housing heights and that he mainly only sales units. He provides engineering advice in literature for peek operations installation instructions. Chris clearly stated all installations are done by pool contractors. The installation are also usually performed to meet their clients high expectations for custom designs that still meet engineering specifications for installation specifications.

I'm putting this in layman terms and hopes to reach a better understanding and consensus by the Zoning and Planning Board.

Please contact me if there is any questions. I will be patiently waiting for how we continue to arrive at 4' as our River Beach Subdivision Restrictions is 4' only on survey property lines. It clearly states no fence and material used is restricted at 4' height.

This was litigated by neighboring parties at the Flagler County Courts ruled 2009 that the

henges over 4’ violated the River Beach Subdivision as it blocked the view of one of the amenities being the River Canal.
Thanks,
Raymond R. Royer Jr.
Janice Paxson (Wife)
3 Pelican Lane
Flagler Beach, Florida 32136
(610)636-5826
fatboy6@ptd.net
Sent from my iPhone

> On Aug 8, 2025, at 2:20 PM, Simone Kenny, AICP <SKenny@flaglercounty.gov> wrote:
>
> Hello Applicants,
>
> The Agenda and Backup for the August 12, 2025 Planning and Development Board have been published and can be accessed here.
>
> Thank you and have a great weekend,
> Simone

Simone Kenny, AICP
Senior Planner
E: SKenny@flaglercounty.gov | V: 386-313-4067 | W: www.flaglercounty.gov
Flagler County Board of County Commissioners
Bunnell, FL 32110
<image002.png>
<image001.png> <image003.png>
<image004.png>
<image005.png>

The mission of Flagler County is to provide high-quality services through a responsive workforce committed to excellence, integrity, in collaboration with the cities and to act as a fiscally responsible steward.

From:	PenTeleData Webmail
To:	Simone Kenny, AICP; Hannah Lademann
Cc:	fatboy6; peter
Subject:	Original Height up to 10" on structural request
Date:	Friday, March 27, 2026 11:54:57 PM

To Whom It May Concern,

I attended my TRC scheduled meeting on March 18th to revisit my applications and discuss BOCC January 12, 2026 appeal findings.
My orignal request plus numerous hearings has always stated my request was for 10' with possible built height of 9'7" at the peek point on a gable roof. That will match the residential home gable roof. The 3" buffer is to protect from going over the height as many factors will apply, if a metal roof is installed or the height grade of the 8'x12' slab differs from the surveyed elevations.
The TRC stated in 2025 that this structure can go up to 12' and anything after that will require another application to go above 12' height.
The TRC requested on 3/18/2026 if possible to show why the structure has to be built above the 4' already approved. My response was that I will try my best to get a letter from Tajimir Davis Engineering and Architect who will be drafting the pool and structural building to meet zoning permits. They were recommended by Ortiz Building and Pool Contractor who will be doing most of the construction. The electrical will be by Anchor Electric installing a 200 amp service for many appliances in this custom pool application. I also stated there is no height limitations on a Pool Pump built structure by Code as did my Attorney, Peter R. McGrath,P.A. Also, my file has a letter from the BADU swim jet Speck Pumps that states they don't evaluate, approve, or disapprove site-specific strutures, neighboring installations, or local zoning interpretations. It also includes that any application of our general guidance to specific projects should be reviewed by the appropriate design professsionals, installers, or local authorities to ensure compliance with all applicable codes and conditions.
They go on to say, we remain available to provide general technical information related to the swim jet system itself, should it be helpful; however, we are not positioned to arbitrate or interpret matters between neighboring parties.
Please review the letter as it has many others statements refering to the overall pool equipment configuration.
Two Planning and Development Board members mentioned their pool pump structures and height to which I stated I don't care what was built and my preferences are to meet my personal safety. As well as daily, weekly and monthly maintenances that will protect my investment from the harsh environment living by the eastern Atlantic ocean.
This email was requested by the TRC to reitterate once again the height. I will be on Monday March 30th to complete another application so the due process is followed with letters being sent and another yard sign posted for public notice of the Planning and Development Board's Meeting on April 14 at 6pm.

Thank you,

Raymond Royer

FLAGLER COUNTY PLANNING AND DEVELOPMENT BOARD REGULAR MEETING
Flagler County Government Services Building,
1769 East Moody Blvd., Board Chambers, Bunnell, FL

MEETING MINUTES

Tuesday, September 9, 2025, at 6:00 P.M.

(Approved at October 10, 2025 PDB Meeting)

1. **Roll Call:** The meeting was called to order by the Chair and a quorum was present.

   Members Present: Michael Boyd (Chair), Ron Long, Timothy Conner, Michael Goodman, Mark Langello and Dan Wilcox.

   Members Absent: Anthony Lombardo (Vice-Chair)

   Present: Adam Mengel, Growth Management Director; Chuck Merenda, Assistant Director; Simone Kenny, Senior Planner; and Hannah Lademann, Planner.

   Board Counsel: Sarah Spector, Assistant County Attorney

2. Pledge to the Flag.

   Mr. Langello informs the Board and public that he has an ongoing medical issue causing pain and medication that may cause him to be groggy. He wants to give a heads up that should the pain be to much, he may need to excuse himself from the meeting early.

3. Approval of August 12, 2025 minutes.

   Motion to approve by: Ron Long
   Seconded by: Mark Langello
   Motion carried unanimously.

Quasi-Judicial Process: The audience should refrain from clapping, booing or shouts of approval or disagreement. To avoid potential legal ramification and possible overturning of a decision by the Courts, a public hearing must be fair in three respects: form, substance and appearance.

Time limits will be observed:
Staff – 10 minute presentation.
Applicant – 15 minute presentation (unless time extended by consensus of Board).
Public Comment – 3 minutes per speaker, 5 minutes if speaking on behalf of a group.
Applicant Rebuttal and Closing Staff Comments – 10 minutes each.

Board Secretary swears in all Applicants and all members of the Public who wish to speak on any item on tonight's agenda.

MOTION: To deviate from the published agenda and move Item #10 to Item #4 as the Applicant has been previously heard before the Board. He would like to ensure the applicant has a full Board, with fresh minds.
Motion by: Michael Goodman
Seconded by: Ron Long
Motion carried unanimously.

4. Quasi-judicial requiring disclosure of ex parte communication:
   Project No. 2025080063 – **REQUEST FOR A VARIANCE IN THE R/C (RESIDENTIAL LIMITED COMMERCIAL) DISTRICT** – request for a Variance in the R/C (Residential Limited Commercial) District for a Pump House at 3 Pelican Lane in the River Beach Subdivision. Parcel Number: 23-11-31-5300-00000-0130; 7,500+/- square feet (0.17+/- acres). Owner/Applicant: Raymond Royer Jr. (AR No. 5921). *(PDB*)

   Board Comments: Mr. Conner asks staff for clarification on how many times an applicant can bring the same item in front of the Board for consideration. He brings forth concerns that this item has been disapproved by this Board in February and appealed to the Commission, then reheard in July and August without approval. Ms. Spector confirms that our code does not restrict an applicant for reapplying for a variance application after being denied.

   Staff Presentation: Simone Kenny, Senior Planner.

   Mr. Long confirmed that the Applicant has the original variance granted in February with the four (4) foot height restriction. Staff confirms.

   Applicant Presentation: Raymond Royer, Jr., Owner. Recaps his previous statements from prior meetings. He also shares a video with the Board demonstrating the size of the pumps.

   Mr. Goodman clarifies the necessity of covering the equipment due to the proximity to the beach. He states that the video Mr. Royer just showed has the equipment outside but stated he needs to cover the equipment due to his proximity to the beach. Mr. Royer confirms and also states he would like to cover the equipment for aesthetics/matching his home.

   Public Comments:

   Dan O'Connell, resident of 7 Mockingbird Lane. He shares a PowerPoint presentation with the Board detailing the previously approved variances, the specs/sizes of the pumps from the sales brochure, and a site plan showing that the computer generated images are misleading. He asks that the variance request be denied.

   Maureen Brunk, resident of 5 Cardinal Lane. She states she has rewatched the recordings on all the previous hearings and due to the fact not all members were present at each meeting, she would like to remind them of the facts. She states that when Mr. Royer purchased this property, he was aware of the size of the lot (being undersized) and the small subdivision consisting of private roads. She states that he has previously addressed her garage as an example of non-compliant structures in the subdivision and contests that he property was developed in 1978 prior to the zoning restrictions. She states that the two recent pools/pool equipment put in the subdivision were able to

appropriately size their pool and permit them without requiring a variance. She asks that the variance request be denied.

Jackie O'Connell, resident of 3 Mockingbird Lane. She states this is her third time speaking in front of this Board regarding the size of this pumphouse. She states that he repeatedly changes his request and makes statements with no material evidence or proof to back up the claims. He states that she has no objections to Mr. Royer receiving permission for a pool or pump house, rather is opposed to the size of the pump house in proximity to Mockingbird Lane. She asks that the variance request be denied as the height is unnecessary to fit the pumps and this is a self-created hardship.

Mr. Long initiates Board discussion relating to the pumps. He states he reached out to numerous contractors from Flagler and Volusia Counties inquiring on whether the current approved pumphouse would accommodate the pumps as described. He states each contractor affirmed that the size/height of the structure as previously approved was sufficient, the only caveat being some of the contractor's recommended ventilation to the structure for the heat of the pumps – but that this would be necessary regardless if the structure was 4' or 9' in height. Mr. Wilcox states that he also did research regarding the pumps and that he reached out to the Baudu manufacture in which they advises that an enclosed structure with more height allows for better ventilation of the pumps. He suggests a middle ground as he believes a 4' height restriction is insufficient.

Mr. Conner states that the problem with the heat load argument is that we don't have any evidence before the Board today to support it, other than hearsay comments. He reminds the Board that this is an evidentiary hearing requiring the applicant to bring forth such supporting evidence for his request. He states that he doesn't doubt that a heat load requirement exists, but that there is no evidence before him today to state whether it can be contained with a 4' or 10' high structure.

Mr. Goodman states that he is a visual person and in effort to understand the request he has driven by the subject property to assess. He states he believes the concerns of the neighbors is nonsense, as he does not believe the pumphouse structure to be obstructive, regardless of the height. Mr. Wilcox states he agrees with Mr. Goodman in regard to the sight triangle visibility perspective. He states he also visited the subject property, and that the volume of the structure does not support a visibility issue from the intersection. Mr. Langello states that he disagrees with Mr. Goodman's statement that the neighbors' arguments are nonsense. He does agree that not all concerns of the neighbors are applicable to the specific request as the height of the structure holds no bearing on the drainage. He states that the character of the neighborhood and how the neighbors perceive is a reasonable concern. He states that the Board has been very generous in their previous approvals allowing Mr. Royer to construct a pool/pool deck/and pumphouse on his property. He states that he could build this on his property today, however, is asking for more that Mr. Langello believes exceeds the minimum relief necessary. He states there is a difference between what someone wants on their property versus what they need in order to function, and he believes the Board has given the approval for the minimum relief necessary in order for the property to function with a pool. Mr. Goodman asks the Board if any of them would be willing to consider a 6' height restriction as opposed to the current 4' height restriction. Mr. Langello states that he believed the reason for the higher pump house request was for privacy concerns. He states that there are other ways to achieve privacy with vegetation. Mr. Long states that he is standing with the current approval as the Board has given the minimum relief necessary. He reminds Mr. Goodman that the reason for the 4' height

restriction was for concurrence with the fence. Mr. Langello restates Mr. Conners' previous statement that this is an evidentiary hearing and that it appears if they were to vote tonight Mr. Royer would not have the majority necessary for approval. He states that it is the applicants right to reapply, and if he were to do so and brought in substantial evidence from an engineer supporting that the pumphouse requires a certain height for ventilation of those specific pumps. Mr. Conner summarizes the previous approved variances given to the applicant, and references LDC Section 3.07.03.E.4 stating that they grant the minimum relief necessary. Mr. Conner states if there is something the Board is missing to support that additional relief is necessary, it is the applicants responsibility to provide that, but that it has not been presented to the Board tonight.

MOTION: The Planning and Development Board finds that all variance criteria as listed in the guidelines at Land Development Code Section 3.07.03.E have been met and therefore approves Project No. 2025080063 for a 22.34 left (West) street side setback variance from the maximum allowed 35 percent lot coverage for a pump house at 3 Pelican Lane (Parcel No. 23-11-31-5300-00000-0130).

Motion to approve by: Michael Goodman
Seconded by: Dan Wilcox

Ron Long – Nay
Dan Wilcox – Ay
Timothy Conner – Nay
Michael Goodman – Ay
Mark Langello – Nay
Michael Boyd (Chair) – Ay

Motion failed 3-3 (Long, Conner, and Langello opposed). The item has been denied.

5. Quasi-judicial requiring disclosure of ex parte communication:
CONTINUED FROM AUGUST 12, 2025 PLANNING AND DEVELOPMENT BOARD REGULAR MEETING
Project No. 2025050047 – **REQUEST FOR A VARIANCE IN THE R-1 (RURAL RESIDENTIAL) DISTRICT** – Request for a Variance in the R-1 (Rural Residential) District for an Addition to a Single-family Dwelling at 4278 Old A1A South. Parcel Number: 09-11-31-0000-01080-0021; 28,629+/- square feet (0.66+/- acres). Owners: Steve and Jeanne Burkhardt, H&W/Applicant: Robert E. Dickinson (AR No. 5693). *(TRC, PDB)*

Board Comment: None

Staff Presentation: Simone Kenney, Senior Planner

Applicant Presentation: Robert Dickinson, Applicant on behalf of the owners. He states that he highlighted in red on the site plan the key elements that play into their need for the variance.

Mr. Langello asks if there is any hardening on the waterway behind the home. Mr. Dickinson states he believes it is coquina that slopes down quite a bit (approximately 15-20' in grade change). Mr. Langello asks how close that grade change is to the addition. Mr. Dickinson points out the proposed grade near the rear of the addition and states in that location it is pretty flat. Mr. Conner asks who owns the property between the rear of the home and waterway. Staff states on Mr. Dickinsons behalf

Instrument No: 2025038206 9/17/2025 8:58 AM BK: 2991 PG: 1571 PAGES: 3 -
RECORDED IN THE OFFICIAL RECORDS OF Tom Bexley, Clerk of the Circuit Court & Comptroller Flagler, FL

FLAGLER COUNTY
PLANNING AND DEVELOPMENT BOARD ORDER NO. 5921
PROJECT NO. 2025080063

Owner: Raymond R. Royer Jr. and Janice L. Paxson
Applicant: Raymond R. Royer Jr.
Location: 3 Pelican Lane, Flagler Beach, FL 32136
Parcel #: 23-11-31-5300-00000-0130
Legal Description: Lot 13 and the South 8 feet of Lot 16, River Beach, according to the map or plat thereof as recorded in Plat Book 5, Page 36, Public Records of Flagler County, Florida

Request: This request is for a 22.34 foot left (West) street side setback variance from the minimum required 25 foot street side setback and a 1.2 percent lot coverage variance from the maximum 35 percent lot coverage in the R/C (Residential/Limited Commercial Use) district at 3 Pelican Lane.

Section 1. Findings.

In accordance with Section 3.07.03. of the Flagler County Land Development Code, the Planning and Development Board, having considered the application at their regular meetings on September 9, 2025 testimony and evidence in the record presented by staff and the parties, other written documentation of record, and comments made during the public hearing portion of the proceedings, finds that the Owners do not meet the criteria of Section 3.07.03.E.1. through 4.:

1. There are extraordinary and exceptional conditions pertaining to the particular piece of property in question because of its size, shape, topography, or other unique features that, when considered in whole or in part, creates an unnecessary hardship.

   The subject property is an undersized Lot of Record being part of the River Beach subdivision dating back to 1959 and being approximately 1,500 square feet under the minimum lot size of 9,000 square feet in the R/C district.

2. Such conditions were not created by the affirmative actions of the applicant and the applicant has acted at all times in good faith.

   This is a before-the-fact variance request and the applicant is seeking permission before applying for a building permit.

3. The variance, if granted, would not cause substantial detriment to the public health, welfare, safety, and morals of the community or impair the purpose and intent of this article.

The granting of a variance will not cause substantial detriment to the public health, welfare, safety, and morals of the community. The applicant has submitted renderings showing that the pump house will be designed and built to be consistent with the existing dwelling.

4. No variance may be granted for a use of land or building that is not permitted by this article.

   Pools, pool decks, and pump houses are permitted accessory uses and structures within the R/C zoning district.

A variance, if granted, shall be the minimum variance necessary to alleviate the hardship. For purposes of this section, an unnecessary hardship shall mean that without the granting of the variance the owner will be deprived of all reasonable use of the property as allowed in the zoning district.

The newly proposed location of the pump house reduces the necessary relief for the street side setback but increases the necessary relief for lot coverage. The current four-foot height limitation does reduce the accessibility and use of the pump house. While the requested variances are before-the-fact and the property is an undersized Lot of Record, the hardship is self-created. The Board could not reach a majority conclusion related to the need for the variances in excess of those as previously approved by the Board.

Section 2. **Denied.**

Based on the foregoing and following the September 9, 2025 hearing of the Planning and Development Board, the requested variances stated above are denied, with a 3-3 vote in favor of approval (tie vote results in a denial of the request).

Section 3. Appeal Rights.

An aggrieved party, including the local governing body, may appeal a Planning and Development Board's order regarding a variance request to the Board of County Commissioners of Flagler County. The appeal shall be conducted in accordance with Section 3.07.03.C. of the Land Development Code. The original application for appeal, accompanied by the required one hundred fifty dollar ($150.00) application fee, with the cost of any required public notice to be borne by the applicant, shall be filed with the Planning and Zoning Director no later than thirty (30) calendar days of the rendition date shown below.

SO ORDERED AND RENDERED, this 16th day of September 2025, by the Planning and Development Board of Flagler County, Florida, by and through its Chairman.

FLAGLER COUNTY
PLANNING AND DEVELOPMENT BOARD

ATTEST:

Adrian Mayol for
Hannah Lademann, Board Secretary

Michael Boyd, Chairman

Approved as to Form:

Sarah Spector, Assistant County Attorney

CERTIFICATE OF SERVICE

PLANNING AND DEVELOPMENT BOARD ORDER NO. 5921
PROJECT NO.: 2025080063

As Secretary to the Planning and Development Board, I hereby certify that on this 19th day of September, 2025, copies of this Planning and Development Board Order No. 5921 were mailed first class, postage prepaid or sent by inter-office government mail to the following:

Raymond R. Royer Jr. and Janice L. Paxson
3 Pelican Lane
Flagler Beach, FL 32136

Attested by: _____ for
Hannah Lademann, Board Secretary

ITEM 9B – THIS ITEM WILL NOT BE HEARD: QUASI-JUDICIAL – PROJECT NO. 2025080074 – REQUEST FOR A REZONING FROM THE AC (AGRICULTURAL) DISTRICT TO THE PUD (PLANNED UNIT DEVELOPMENT) DISTRICT. PARCEL NUMBERS: 28-12-31-0000-01010-0000 AND 29-12-31- 0000-01010-0000; PARCEL SIZE: 119+/- ACRES. OWNER: MPC LOTS LLC/APPLICANTS: RICHARD SMITH AND NIKA HOSSEINI. (AR NO. 5931)

There has been a request for the BOCC to open and continue to the Board's March 16, 2026, Regular Meeting at 5:30 p.m.

ITEM 9C – QUASI-JUDICIAL – PROJECT NO. 2025080063 – REQUEST FOR AN APPEAL OF THE PLANNING AND DEVELOPMENT BOARD'S DECISION DENYING VARIANCES FROM THE MINIMUM REQUIRED REAR SETBACK, MINIMUM REQUIRED STREETSIDE (WEST) SETBACK, AND MAXIMUM LOT COVERAGE REQUIREMENT FOR A PROPOSED POOL, POOL DECK, AND PUMP HOUSE IN THE R/C (RESIDENTIAL/LIMITED COMMERCIAL) DISTRICT AT 3 PELICAN LANE. PARCEL NUMBER: 23-11- 31-5300-00000-0130; 7,500+/- SQUARE FEET (0.17+/- ACRES). OWNERS: RAYMOND R. ROYER, JR., AND JANICE L. PAXSON/APPELLANT: RAYMOND R. ROYER, JR./AGENT: PETER R. MCGRATH, ESQ. (AR NO. 6024)

This item was requested by Adam Mengel, Growth Management Director:

THIS SPACE INTENTIONALLY LEFT BLANK

(Item 9c – Continued)

FLAGLER COUNTY BOARD OF COUNTY COMMISSIONERS
PUBLIC HEARING/AGENDA ITEM #9c

SUBJECT: QUASI-JUDICIAL – Project No. 2025080063 – Request for an Appeal of the Planning and Development Board's Decision Denying Variances from the Minimum Required Rear Setback, Minimum Required Streetside (West) Setback, and Maximum Lot Coverage Requirement for a Proposed Pool, Pool Deck, and Pump House in the R/C (Residential/Limited Commercial) District at 3 Pelican Lane. Parcel Number: 23-11-31-5300-00000-0130; 7,500+/- square feet (0.17+/- acres). Owners: Raymond R. Royer, Jr., and Janice L. Paxson/Appellant: Raymond R. Royer, Jr./Agent: Peter R. McGrath, Esq. (AR No. 6024).

DATE OF MEETING: January 12, 2026

OVERVIEW/SUMMARY: This request is quasi-judicial in nature and requires disclosure of ex parte communication.

An appeal was filed by the Owners on October 16, 2025, related to the Planning and Development Board's most recent variance denial for variances related to the construction of a pool, pool deck, and pump house at 3 Pelican Lane. Specifically, the Appellants'/Owners' most recent appeal requests:

> "Owners will be deprived of all reasonable use of the property as allowed in the zoning district. At the Technical Review Committee (TRC) which two reviews stated this application property R/C District can go to 12' high on the proposal structure. Applications requested in February to request 10' high as a buffer. But matching the residential home the owners would try reaching a 9'7" gable roof for pleasing appeal."

The appeal application cites the Planning and Development Board's Order No. 5921 from its September 9, 2025, regular meeting, where the Board's decision is provided by the appellant as: "3-3 vote in favor of approval (tie vote results in a denial of the request)."

This is Mr. Royer's second appeal to the Board of County Commissioners. His first appeal – like this appeal – sought the elimination of the Planning and Development Board's four-foot height limitation on the proposed pump house, with all other requested variances for the pool and pool deck's location and a variance to exceed lot coverage all approved by the Planning Board at its February 11, 2025, regular meeting. The Planning and Development Board's approval (vote on the motion was unanimous) stated:

> "The Planning and Development Board find that all the variance criteria as listed in the guidelines at Land Development Code Section 3.07.03.E have been met and therefore approves Project No. 2024110031 for 3.49 foot rear (North) variance from the minimum required 10 foot rear setback for a pool and pool deck, a 25 foot left streetside (West) variance from the minimum required 25 foot streetside

(Item 9c – Continued)

FLAGLER COUNTY BOARD OF COUNTY COMMISSIONERS
PUBLIC HEARING/AGENDA ITEM #9c

setback for a pool and pool deck, a 22-foot left streetside (West) variance from the minimum required 25-foot streetside setback for a pump house, a 0.82 percent lot coverage variance from the maximum allowed 35 percent lot coverage at 3 Pelican Lane (Parcel No. 23-11-31-5300-00000-0130), subject to the following condition:

1. The pump house is to be within the boundaries of the block wall (pool barrier) and not taller than 4 feet in height."

This first appeal was heard by the Board of County Commissioners at its May 5, 2025, regular meeting. After considering the appeal request, the Board denied (on a unanimous vote) the appeal (as copied below from the approved meeting minutes):

> "A motion was made by Commissioner Hansen to deny the appeal on the basis that the Planning and Development Board's decision was supported by competent substantial evidence, the [sic] due process was accorded to the applicant, and the essential requirements of law, primarily the four criteria for variances within the LDC, have been observed. Seconded by Commissioner Carney. Chair Dance called the question. Motion carried unanimously."

Unlike other land use requests, variance requests are not time-barred: a reapplication could be made at any time, and the Board's comments from the May 5, 2025, meeting concluded with this acknowledgement (again from the minutes):

> "Chair Dance noted Mr. Royer would have to re-apply, bring additional evidence, and modify his plan."

Mr. Royer did file a subsequent variance application (Project No. 2025050043), which was ultimately denied at the Planning and Development Board's August 12, 2025, regular meeting following a tie vote (2-2) on a motion to approve: a tie vote results in a denial of the request (see Order No. 5689). Due to discrepancies in the vote (and the County's hearing process) from the August Planning Board meeting, Mr. Royer was allowed by staff to reapply for his variance requests without requiring an application fee, seeking (according to his application):

> "Hardship relief on undersize lot, variance relief for pool housing structure: on height roof coverage."

The Planning and Development Board considered his third variance application at the Board's September 9, 2025, regular meeting, which again ended in a denial – a 3-3 tie vote on a motion to approve – of his variance requests. Mr. Royer had requested that County staff allow this appeal application to be submitted without an application fee, which was rejected by County staff: this delayed his appeal application submittal.

(Item 9c – Continued)

FLAGLER COUNTY BOARD OF COUNTY COMMISSIONERS
PUBLIC HEARING/AGENDA ITEM #9c

As a reminder to the Board, the subject parcel lies on the North side of Pelican Lane, East of Mockingbird Lane):



The Board of County Commissioners is the appellate authority following a decision by the Planning and Development Board pursuant to Section 3.07.03.C.1 of the Land Development Code. In turn, the decision of the Board of County Commissioners may ultimately be appealed to the Circuit Court. It is noted that the Board's denial of Mr. Royer's original appeal was not further appealed to the Circuit Court.

The appeal must be reviewed based on the record presented at the Planning and Development Board meetings and also argument of the appellant before the County Commission. No new evidence or testimony may be provided. In deciding, the Board of County Commissioners must make three determinations:

1. **Whether the Planning and Development Board's decision was supported by competent substantial evidence;**
2. **Whether due process was accorded; and**

(Item 9c – Continued)

FLAGLER COUNTY BOARD OF COUNTY COMMISSIONERS
PUBLIC HEARING/AGENDA ITEM #9c

3. **Whether the essential requirements of law (primarily, the four Criteria for Variances within the LDC) have been observed.**

As a variance request, the necessary detail is provided to the Planning and Development Board through a site plan. Initial site plan requirements for both variances and special exceptions are listed at LDC Section 3.07.03.A.2. The Planning and Development Board considered the applicants' site plans, which are included in the back up material attached hereto. It is noted that since the initial variance request, Mr. Royer had added to his submittal elevation views depicting the proposed construction.

Specific to variances, the LDC requires (at LDC Sec. 3.07.03.E.) demonstration that the four variance guidelines are considered by a variance applicant, with these guidelines typically depicted on a site plan and through a written narrative (and where "the board [Planning and Development Board] shall be guided by the following"):

> "*Variance guidelines.* A variance may be granted from the terms and provisions of this article where, owing to special conditions relating to the property, a literal enforcement of the provisions of this article will, in an individual case, result in unnecessary hardship. Variances may be granted by the Planning and Development Board in such an individual case of unnecessary hardship upon a written finding based on competent, substantial evidence in the official record that:
>
> 1. There are extraordinary and exceptional conditions pertaining to the particular piece of property in question because of its size, shape, topography, or other unique features that, when considered in whole or in part, creates an unnecessary hardship; and
> 2. Such conditions were not created by the affirmative actions of the applicant and the applicant has acted at all times in good faith; and
> 3. The variance, if granted, would not cause substantial detriment to the public health, welfare, safety, and morals of the community or impair the purpose and intent of this article; and
> 4. No variance may be granted for a use of land or building that is not permitted by this article.
>
> A variance, if granted, shall be the minimum variance necessary to alleviate the hardship. For purposes of this section, an unnecessary hardship shall mean that without the granting of the variance the owner will be deprived of all reasonable use of the property as allowed in the zoning district."

The Planning and Development Board's findings regarding these criteria are stated in the Planning Board's Order regarding the variance and are reflected in the Planning Board's technical staff report attached to this report.

(Item 9c – Continued)

FLAGLER COUNTY BOARD OF COUNTY COMMISSIONERS
PUBLIC HEARING/AGENDA ITEM #9c

It is assumed that the Appellants' appeal request claims that the four (4) foot-height limitation originally imposed on the pump house (through the original variance approval) deprives him of his use of the pump house in the intended manner. However, the final paragraph of the Variance guidelines listed above states, ***"A variance, if granted, shall be the minimum variance necessary to alleviate the hardship."*** (Emphasis added). The Planning and Development Board's intent with the imposed condition was to ensure that the granted variances were the minimum variances necessary to alleviate the hardship, providing space for a pump house but arguably not for housing pool furniture.

This appeal iteration alleges that the "Owners will be deprived of all reasonable use of the property as allowed in the zoning district." Staff counters that the Planning Board's decision – with two tie-votes – was indicative of the difficulty posed by his request, where the Planning Board seeks to balance reasonable requests for relief from the strict application of the Land Development Code's requirements with limitations that respect the adjacent neighborhood and uphold the Code's intent to protect the health, safety, and general welfare. In staff's opinion, the Planning Board correctly weighed the evidence and testimony provided in the variance application and at the public hearing, and could not come to a majority consensus resulting in approval; however, the deprivation of "all reasonable use" is not the end result. The previously granted variances – inclusive of the pump house height limitation – provided for the proposed pool development. In the end, the "reasonable use" was not deprived, but instead it was conditioned on a requirement to limit the pump house height. The appeal goes on to state that: "At the Technical Review Committee (TRC) which two reviews stated this application property R/C District can go to 12' high on the proposal structure." This is correct, but the Planning Board opted to restrict the pump house height to less than 12 feet as a condition of granting the requested variances. This is the Board's prerogative: if the pump house can be placed on the parcel without the variances, then the 12-foot height applies. The appeal further (appears) to seek a 9-foot, 7-inch pump house height to match the height of the existing dwelling's gable roof: "But matching the residential home the owners would try reaching a 9'7" gable roof for pleasing appeal." The Board heard this proposal, and the vote – effectively considered at two separate consecutive meetings – resulted in a tie-vote (and a denial of the variance request) at each of these Planning and Development Board meetings.

This agenda item is:
__X__ quasi-judicial, requiring disclosure of ex-parte communication; or
_____ legislative, not requiring formal disclosure of ex-parte communication.

STRATEGIC PLAN:
Focus Area: Effective Government
- Goal 2 – Build & Maintain Relationships to Support Effective & Efficient Government
  - Objective EG 2.4: Establish joint strategies to identify and address needs through leveraging of local resources.

(Item 9c – Continued)

FLAGLER COUNTY BOARD OF COUNTY COMMISSIONERS
PUBLIC HEARING/AGENDA ITEM #9c

DEPARTMENT CONTACT:
Adam Mengel, Growth Management Director, (386) 313-4065

Public notice has been provided for this application according to Land Development Code (LDC) Section 2.07.00.

OPTIONS FOR THE BOARD: As a reminder, the Board of County Commissioners is sitting in an appellate capacity as it relates to this matter. It is limited by LDC Section 3.07.03.C. to determining whether:

1. The Planning and Development Board's decision was supported by competent, substantial evidence;
2. Whether due process was accorded; and
3. Whether the essential requirements of the law have been observed.

The Board of County Commissioners may take ONE of the following actions:

1. APPROVE the Appeal request, overturning the Planning and Development Board's denial of the Variances for the Pool, Pool Deck, and Pump House in the R/C (Residential/Limited Commercial Use) District at 3 Pelican Lane. With this course of action, the Board of County Commissioners will be **OVERTURNING** the decision of the Planning and Development Board's condition to limit the height of the proposed Pump House to Four (4) Feet. The Board of County Commissioners will need to set the maximum height of the Pump House; otherwise, the maximum height will be limited to a maximum height of twelve (12) feet.

2. DENY the Appeal request, upholding the Planning and Development Board's denial of the Variance – along with affirming the original Variance condition to limit the height of the proposed Pump House to Four (4) Feet at 3 Pelican Lane. With this course of action, the Board of County Commissioners will be **AFFIRMING** the Planning and Development Board's decision to grant the Variance *with the condition as to the Pump House as originally imposed by the Planning and Development Board.*

3. REMAND the Variance denial back to the Planning and Development Board for further proceedings with direction on how the Planning and Development Board failed to base its decision on competent substantial evidence, accord due process, and/or observe the essential requirements of law. The Variance use is held in abeyance until the Planning and Development Board renders a decision on the Variance as remanded.

4. CONTINUE the Board of County Commissioners' review of the appeals to a time and date certain. A continuance should be for the appellants or for staff to provide additional information to the Board of County Commissioners.

(Item 9c – Continued)

FLAGLER COUNTY BOARD OF COUNTY COMMISSIONERS
PUBLIC HEARING/AGENDA ITEM #9c

It should be noted that, unlike a rezoning request that is limited to no more than one request for the same parcel of land every six months, a variance application submittal is not time-barred (see LDC Sec. 3.07.05.G.). Accordingly, should the Board of County Commissioners uphold the Planning and Development Board's denial of the variance, the owner may (again) immediately refile a variance request with the County for a similar request.

QUASI-JUDICIAL: Commissioner Hansen disclosed having communication with the applicant, Mr. Royer. Stated Mr. Royer was upset about the application denial, so he attempted to plead his case.

Adam Mengel, Growth Management Director, provided a presentation that included a summary of the staff report referenced above.

Commissioner Richardson inquired whether all structures within the community would be required to be four feet in height or less if the appeal request were denied.

Mr. Mengel explained that the Planning Board had considered the number of variances previously granted to the applicant and, as a result, elected to further limit the height of the pump house as a condition of approving the additional variances. He added that the height could be as much as twelve feet.

Commissioner Carney asked how many members serve on the Planning Board.

Mr. Mengel stated that there are typically seven members on the Planning Board; however, only six members were present at the September 9th meeting.

Commissioner Pennington requested confirmation that there had been a tie vote at the September 9th meeting.

Mr. Mengel confirmed that there was a tie vote.

Commissioner Hansen expressed concern regarding potential unfairness, noting that three Planning Board members had previously voted in favor of approving the variance request. He further observed that there had also been a tie vote on Mr. Royer's initial variance request.

Mr. Mengal commented on the even number of Planning Board members being problematic.

(Item 9c – Continued)

Commissioner Dance stated this is not a denial of due process.

Commissioner Carney agreed that an even number of Planning Board members is problematic. Asked for confirmation that the four-foot limitation was imposed by the Planning Board.

Mr. Mengal responded with yes. Explained how the Planning Board made the determination on the limitation.

Chair Pennington called for the applicant.

Peter McGrath, Appellant's Attorney, stated there has been an assumption that there is a four-foot height limitation with respect to hedges and walls based on a set of covenants and restrictions. Noted he has an opinion letter.

Commissioner Dance asked if the opinion letter is new evidence.

Mr. McGrath answered yes.

Commissioner Dance stated no new evidence could be considered.

Michael Rodriguez, County Attorney, noted new evidence falls outside the scope of the appeal.

Mr. McGrath spoke about how Mr. Royer voluntarily limited the height of the wall and that the restrictions have dropped off his title. Further stated that a six-foot wall would still comply with the Land Development Code (LDC) requirements. He noted that while the LDC does not specifically address pool pump houses, it does regulate accessory structures, and that under those provisions Mr. Royer would be permitted a height of up to twelve feet. Mr. McGrath stated that Mr. Royer intends to construct the pump house to a height of nine feet, seven inches, and is requesting a ten-foot allowance to accommodate minor variation. Emphasized that the pump house must contain two four-horsepower motors, a pool pump, a filtration system, and a pool heater, and that a four-foot height limitation would create a hardship by failing to provide sufficient space for the equipment and adequate ventilation. Further noted that there has been a tie vote on more than one occasion.

Raymond Royer, Appellant, spoke about his due process being violated and the Planning Board members being biased. Added there is no justification on the four-foot limitation.

Mr. McGrath stated the licensed contractor was present to discuss the issue concerning the four-foot limitation on the height of the structure.

(Item 9c – Continued)

Chair Pennington clarified the procedures. Asked whether the Planning Board had discussed the issues of equipment space and ventilation within the structure.

Mr. Mengal stated there had been a suggestion for the pump installer to appear before the Planning Board, but that this did not occur. Added that the pump installation manual was submitted as evidence. Explained that Mr. Royer indicated the additional room would be necessary to accommodate the pumps. Further noted that there is a four-foot height limitation for structures and fencing in front yards, and the shed could not be placed in its current location without a variance. Stated that the Planning Board granted the variance on the condition that the height of the structure be limited to four feet. Also noted that this is a corner lot and further clarified the applicable LDC requirements for the residential zoning district.

Commissioner Dance stated that the four-foot height limitation is not arbitrary.

Mr. Mengal stated it is not. Added that there may be private covenants and restrictions; however, those were not reviewed because the LDC requirements governed the analysis.

There was extensive BOCC discussion on the appeal request.

Mr. McGrath and Mr. Royer gave a rebuttal statement.

Chair Pennington called for public comment and there was none.

Chair Pennington called for public comment.

Tamara Daniels, Contractor Representative, commented on the pool equipment and proposed structure.

Michael Rodriguez, County Attorney, stated only the appellant and interested parties with standing that have been permitted to intervene may present oral argument on the established record, but no new testimony or other evidence shall be taken. Clarified this is not a matter for public comment because this is an appeal limited to the record before it. Asked the BOCC to disregard Ms. Daniel's testimony.

Commissioner Carney inquired what CFMs are.

Mr. Mengal responded with Cubic Feet per Minute. Noted it is measure of air flow.

The BOCC entered into further discussion on the appeal request.

(Item 9c – Continued)

Mr. Rodriguez stated the Planning Board did not render a decision to affirm or overturn. Clarified the rules and procedures and advised the BOCC on how they could take action on the item.

There was BOCC discussion on the variance requests.

A motion was made by Commissioner Dance to remand the variance denial back to the Planning and Development Board for further proceedings, with direction on reviewing the height of the accessory structure and for compliance with the Land Development Code.

Mr. Rodriguez noted what should be included in the motion.

Commissioner Dance asked for clarification.

Mr. Rodriguez clarified.

Chair Pennington asked if the BOCC should vote on the motion without public comment.

Mr. Rodriguez advised the BOCC.

The motion was seconded by Commissioner Carney.

An amended motion was made by Commissioner Dance to remand the variance denial back to the Planning and Development Board for reconsideration of the variance and the additional request for the increase of the height of the accessory structure to 10 feet, and that the variance meets the criteria for a variance under the Land Development Code. Seconded by Commissioner Carney.

Chair Pennington called for a roll call vote.

Tiffani Smith, Deputy Clerk, took a roll call vote and captured the following responses:

- **Commissioner Richardson: "Yes"**
- **Commissioner Hansen: "Aye"**
- **Chair Pennington: "Yes"**
- **Commissioner Carney: "Yes"**
- **Commissioner Dance: "Aye"**

Motion carried unanimously.

Instrument No: 2026009025 3/2/2026 3:01 PM BK: 3034 PG: 754 PAGES: 3 -
RECORDED IN THE OFFICIAL RECORDS OF Tom Bexley, Clerk of the Circuit Court & Comptroller Flagler, FL

FLAGLER COUNTY
BOARD OF COUNTY COMMISSIONERS ORDER NO. 6024
PROJECT NO. 2025080063

Appellants: Raymond R. Royer Jr. and Janice L. Paxson
Owners: Raymond R. Royer Jr. and Janice L. Paxson
Applicant: Raymond R. Royer Jr.
Location: 3 Pelican Lane, Flagler Beach, FL 32136
Parcel #: 23-11-31-5300-00000-0130
Legal Description: Lot 13 and the South 8 feet of Lot 16, River Beach, according to the map or plat thereof as recorded in Plat Book 5, Page 36, Public Records of Flagler County, Florida

Request: The appellants filed an application for the Board of County Commissioners to consider an appeal of the Planning and Development Board's denial (Planning and Development Board Order No. 5921 rendered September 16, 2025 and recorded on September 17, 2025 at Official Records Book 2991, Page 1571, Public Records of Flagler County, Florida) for a 22.34 foot left (West) street side setback variance from the minimum required 25 foot street side setback and a 1.2 percent lot coverage variance from the maximum 35 percent lot coverage in the R/C (Residential/Limited Commercial Use) district at 3 Pelican Lane (Parcel Number: 23-11-31-5300-00000-0130). The appellants specifically requested that:

"Owners will be deprived of all reasonable use of the property as allowed in the zoning district. At the Technical Review Committee (TRC) which two reviews stated this application property R/C District can go to 12' high on the proposal structure. Applications requested in February to request 10' high as a buffer. But matching the residential home the owners would try reaching a 9'7" gable roof for pleasing appeal."

Section 1. **Findings.**

The Board of County Commissioners, having considered the appeal application at its regular meeting on January 12, 2026, testimony and evidence in the record presented by staff and the parties, other written documentation of record, and comments made during the public hearing portion of the proceedings, determined that:

1. Whether the Planning and Development Board's decision was supported by competent substantial evidence;

   The Board found that the Planning and Development Board's decision denying the variance request was neither supported or not supported by competent substantial evidence. The Board's decision denying the

application request was based on the Board's tie-vote resulting in a denial.

2. Whether due process was accorded; and

   The Board of County Commissioners found that due process was accorded to all parties by the Planning and Development Board.

3. Whether the essential requirements of law (primarily, the four Criteria for Variances within the LDC) have been observed.

   The Board of County Commissioners found that the essential requirements of law – including primarily the four Criteria for Variances within the LDC – have been observed by the Planning and Development Board. However, the Board's denial of the application request – due to the tie-vote – necessitates the Board's reconsideration of the variance request on remand to make a determination on the variance application for reconsideration of the variance request inclusive of the increase in height of the pump house accessory structure to 9 feet, 7 inches, finding that the request meets the criteria for approval of a variance under the LDC.

Section 2. **Remanded.**

Based on the foregoing and following the January 12, 2026 hearing of the Board of County Commissioners, the requested appeal stated above is remanded to the Planning and Development Board for reconsideration.

Section 3. **Appeal Rights.**

An aggrieved party, including the local governing body, may appeal a Board of County Commissioners' order regarding an appeal request by filing such appeal with the Circuit Court of Flagler County, Florida, within thirty (30) days of the rendering of the order by the Board. Such appeal shall be by writ of certiorari and shall not be a hearing de novo.

FLAGLER COUNTY
BOARD OF COUNTY COMMISSIONERS ORDER NO. 6024
PROJECT NO. 2025080063

SO ORDERED AND RENDERED, this 2nd day of March 2026, by the Board of County Commissioners of Flagler County, Florida, by and through its Chair.

FLAGLER COUNTY
BOARD OF COUNTY COMMISSIONERS

ATTEST:

D.C.

Tom Bexley, Clerk of the Circuit Court
and Comptroller

Leann Pennington, Chair

Approved as to Form:

Sarah Spector, Assistant County Attorney

FLAGLER COUNTY PLANNING AND DEVELOPMENT BOARD REGULAR MEETING
Flagler County Government Services Building,
1769 East Moody Blvd., Board Chambers, Bunnell, FL

MEETING MINUTES

Tuesday, April 14, 2026, at 6:00 P.M.

1. **Roll Call:** The meeting was called to order by the Chair and a quorum was present.

   Members Present: Anthony Lombardo, Ron Long (Vice-Chair), Michael Goodman, Timothy Conner, Dan Wilcox and Mark Langello (Chair).

   Members Absent: Michael Boyd (Excused)

   Present: Chuck Merenda, Interim Growth Management Director; Simone Kenny, Senior Planner; and Hannah Lademann, Planner.

   Board Counsel: Sarah Spector, Assistant County Attorney

2. Pledge to the Flag.

3. Approval of March 10, 2026 minutes.

   Motion to approve by: Anthony Lombardo
   Seconded by: Michael Goodman
   Motion carried unanimously.

Quasi-Judicial Process: The audience should refrain from clapping, booing or shouts of approval or disagreement. To avoid potential legal ramification and possible overturning of a decision by the Courts, a public hearing must be fair in three respects: form, substance and appearance.

Time limits will be observed:
Staff – 10 minute presentation.
Applicant – 15 minute presentation (unless time extended by consensus of Board).
Public Comment – 3 minutes per speaker, 5 minutes if speaking on behalf of a group.
Applicant Rebuttal and Closing Staff Comments – 10 minutes each.

Board Secretary swears in members of the public who will testify on any item on todays agenda.

4. Quasi-judicial requiring disclosure of ex parte communication:
   Project 2026020046 – **REQUEST FOR VARIANCE IN THE PUD (PLANNED UNIT DEVELOPMENT) DISTRICT** – Request for a Variance in the PUD (Planned Unit Development) District from the Minimum Required Rear Setback at 21 N Riverwalk Drive. Parcel Number: 27-11-31-4890-00000-0740; Parcel Size: 9,026+/- Square Feet (0.21+/- Acres).Owner/Applicant: George and Heather Houck. (AR 6337). *(TRC, PDB)*

   Board Comments: None

Staff Presentation: Simone Kenny, Senior Planner.

Applicant Presentation: George Houck, Owner.

Public Comments: None

MOTION: The Planning and Development Board finds that all the variance criteria as listed in the guidelines at Land Development Code Section 3.07.03.E have been met and therefore approves Project No. 2026020046 for a 5 foot rear (West) yard setback variance from the minimum required 10 foot rear yard setback for a pool and pool deck at 21 N Riverwalk Drive (Parcel No. 27-11-31-4890-00000-0740)

Motion to approve by: Michael Goodman
Seconded by: Dan Wilcox
Anthony Lombardo – Aye
Dan Wilcox – Aye
Timothy Conner – Aye
Michael Goodman – Aye
Ron Long – Aye
Mark Langello (Chair) – Aye
Motion carries unanimously.

5. Quasi-judicial requiring disclosure of ex parte communication:
Project 2025080063 – **REQUEST FOR VARIANCE IN THE R/C (RESIDENTIAL) LIMITED COMMERCIAL) DISTRICT** – Request for a Variance in the R/C (Residential/limited Commercial) District for a Pump House at 3 Pelican Lane. Parcel Number: 223-11-31-5300-00000-0130; Parcel Size: 7,500+/- Square Feet (0.17+/- Acres). Owner/Applicant: Raymond Royer Jr. (AR 5921).
(TRC, PDB)

Board Comments: Mr. Conner states he has had small talk with Mr. Royer in and out of various meetings. Mr. Langello concurs that he also said a hello to Mr. Royer in the hall prior to today's meeting.

Mr. Conner asks if this is the No vote from before or if prior applications are supposed to be considered. Ms. Kenny states that this is the same application that we heard in September as it was appealed to the County Commission and remanded back to this Board. Mr. Conner asks if they should consider testimony from the first hearing. Mr. Langello states that it's his understanding we will be hearing new evidence either by the public or by Mr. Royer. Ms. Kenny states that they can hear new evidence today, but the application before us today is essentially the same application that was heard in September.

Staff Presentation: Simone Kenny, Senior Planner.

Mr. Long asks for clarification that the applicant holds an approval for the pool, fence and pump house with a 4' height restriction. Staff confirms.

Applicant Presentation: Raymond Royer Jr., Owner and Peter McGrath, Esq.

Mr. Lombardo states that he appreciates the rendering, he states that this would have given a better perspective of what was being proposed.

Mr. Goodman asks for aesthetic purposes, if a window on the pumphouse was considered. Mr. McGrath states that it has not been contemplated at this time, but if it would accommodate the request, he does not foresee it to be an issue.

Mr. Langello gives Mr. McGrath some historic background on why the 4' height limitation was imposed on the original request. He states that because the structure did not meet the setback and was encroaching well into the setback, to compromise and keep the structure harmonious with the 4' fence.

Mr. McGrath states that he understand the location of the home, but that the structure is within the limitations of the approved variance for the setback. And that while the 4' height structure was given to compromise on the setback request; it makes the project unfeasible.

Mr. Langello asks staff if they can show the five emails that were forwarded to the Board as public comment on the screen. He states that the public has been continually showing up to meetings and making repeat comment, and that they should have a chance to be heard.

Public Comments:

Jackie O'Connell, resident of 8 Mockingbird Lane. States she is also speaking on behalf of Nancy Wells, an adjacent neighbor who is unable to attend. She shows the board an overview photo of the neighborhood. She states that unlike other beachside neighborhoods, they have room, space, and a harmonious community. She states they have no roadside structures and would like to keep it that way. She goes through the variance criteria and states that it is a self-created hardship as he bought a lot that was to small for all his wants and needs. She references an email sent by Mr. Royer that states he may go up to 12' high to quote "to create a small storage area like a small attic". She references in previous Planning Board meetings, the Board has asked for engineering plans to support the need for a higher structure, yet months later this is not available. She references Mr. Royer submitted an example of a pool house being built up the road to the Board of County Commission, however Ms. O'Connell states the Commission was not informed that pool equipment was not enclosed in this pool house and that setback variances were not needed. She references what the street view of the structure would look like should this be approved and that there is no desire for the neighborhood to resemble a zero lot-line neighborhood.

Maureen Brunk, resident of 5 Cardinal Lane. She states that this neighborhood is unlike others, as it is older, established and not full of other variances. She states when looking at the rendering, the property line is less than a yard stick away from the side of the street. She asks if they could imagine looking at a 10' high structure, a yard stick away from the street on a corner lot. She states Mr. Royer is not being denied all reasonable use of the property. She states that this Board needs to consider the neighbors and the 5 lots/homes on Mockingbird who will be affected by a structure less than a yard stick away from there ingress/egress and sightline. She states that there has been talks of aesthetics, but the beauty in the eye of the beholder and to those in the neighborhood, this is a detriment.

Dan O'Connell, resident of 7 Mockingbird Lane. States he is speaking on behalf of Dawn Harris of 3 Cardinal Lane. He references the County's Land Development Code and its variance criteria that states that the request should be the minimum relief necessary to alleviate the hardship. He states with the previously approved variances, that Mr. Royer is not being deprived of all reasonable use of his property. He states that a 10' high structure 2.5' of the property line is not the minimum relief

necessary. He states that it is worth noting that Staff has consistently said in all hearings that this is a self-created hardship. He states he does not believe the code intended the Board to award applicants for creating hardships. He states that the Boards decision should be based solely on the variance criteria, and not considering of the renderings provided and their attractiveness, especially given that they're not to scale as previously stated by the applicant. He states that we have heard no new evidence regarding the pumps that requires an additional height allowance. He states that he took the time to read the 28-page installation manual and the 17-page operation manual. He states that no where in the manual does it say that enclosing the pumps is necessary. He states no one in the neighborhood is opposed to Mr. Royer having a pumphouse. He states they are opposed to a structure of that height less than three feet to the property line, on a corner lot. He again states that Mr. Royer has already been granted the variances needed to build his pool and asks that the Board uphold the intent of the County Code in reference to the variance criteria and deny the request as it is not the minimum relief and he is not being deprived of reasonable use of his property.

Raymond Royer Jr. on rebuttal. In reference to the previous mentioned recommendation not to enclose the pumps, he states the person was not aware when making his recommendation not to enclose them that the pumps were by the ocean and that due to the salt, he would enclose them. He states there are other accessory structures in the neighborhood that are larger in size and have been approved. He states he has previously been told not to talk about other people's properties, but doesn't understand how others are allowed to do so.

Peter McGrath, Esq on rebuttal. He states these are non-curbed streets that in essence blend in with the lots. He states that there are no well defined property lines and the structure does not impede the sightline on the corner lot. He states what is being proposed in innocuous. He states that with respect to the character of the subdivision, this small structure cannot be made to be compromising the character. He repeats that the restrictions of this subdivision have dropped off the title of his client's property. He states this is a good faith proposal with well thought out renderings that will not subtract from anyone's quality of life. He asks the board to consider what is feasible and what is not. He states that for ventilation purposes, safety from salty air, hurricane proof and to adequately accommodate the equipment, that the requested structure is what's feasible.

Mr. Langello states that he has proposed alternative locations to Mr. Royer and has not received any comments. Mr. Royer states that the referenced portion of the house was previously enclosed and he does not know the history of the construction. He states that he does not want to attach his permanent structure to a portion of the house where he is not confident in the construction.

Mr. Langello states that he can assure him, from a contractor's point of view, there are a lot of options and ways to make this fit/work on the lot without that high of a structure. He mentions that it appears Mr. Royer is stuck with this one concept and not exploring all options.

Mr. Royer references that force of the pumps, and his history as a Navy swimmer is why he's choosing the system he's choosing. Mr. Langello commends him for his service and states that he has allowed him to speak without interrupting. Mr. Long applauds his persistence on this application. He states that so many alternative options have been proposed, and that he's so stuck on this one proposal. He states, in his opinion, he does not believe this is solely a pumphouse for him. He states he has heard many times over and over the term storage and he believes this is likely wanting a storage building rather than just a pump house. He states that they are bound to give the minimum relief necessary for the requests, which is for a pumphouse – and that what he keeps asking for is not the minimum relief needed for a pumphouse for pool equipment. He states that if he wants to talk about a storage shed, they'll talk about it but that the application in front of them today is for a pumphouse.

Mr. Royer states that he provided renderings as asked for by this Board. He states as he has mentioned time and time again in all hearings that the primary use of the structure is a pumphouse. He states while he may store a ladder in the building or move his furniture inside during a storm but that it is not a storage building. He states that it may be used for additional storage less than 10 percent of the year. He repeats that the primary use is a pumphouse.

Mr. Goodman states that Mr. Royer is being his own worst enemy right now. He states he does not have a problem with the project. He states that his neighbors may have a personal problem with him. He states there is no issue with the line of sight and that it's not a detriment to the community. He states that perhaps he is squeezing the envelope a little too much, but he doesn't have a problem.

Mr. Lombardo asks staff to clarify the Rubbermaid shed and whether or not Mr. Royer could put that on the property without permission. Ms. Kenny references the County's shed policy that a shed less than 60 sq ft in size does not require a permit, however it still needs to meet setbacks.

Mr. Conner states that it's not about the type of structure, it's about the placement of the structure. He states in order to place a structure of any sort in this location; he would need a variance for the setback.

Mr. Conner states that the legal standard for reviewing and approving a variance is substantial competent evidence, but it is not this Boards responsibility to deny the request based on substantial competent evidence so much as it is Mr. Royer's burden to provide substantial competent evidence that the additional height in the structure is needed to support the pumps for approval. He states the Board has given Mr. Royer direction in the past meets to bring them an engineer who can provide real detail competent knowledge, which would then be substantial competent evidence that says the heat load requires a larger structure. He states there has been a lot of statements alleged tonight that the Board has no substantial competent evidence to support. He states they have already given the minimum relief necessary to accommodate the pool and equipment – and that they have not provided substantial competent evidence tonight that would opt them to change the 4' height limitation.

Mr. Lombardo states that he cleans his own pool/equipment and that you need space to be able to do that. He states that he couldn't imagine putting a 4' high structure there with hydraulic pumps and being able to work in there and get the equipment clean, based on his own experience in cleaning his own pool.

Mr. Conners asks Mr. Lombardo if he has heard any evidence tonight that would lead him to that conclusion other than his own experience. Mr. Lombardo states that it's just his personal experience, and while he's not a professional pool cleaner he believes you need space to do so. Mr. Conners states that while they all have their personal experiences/opinions, that is not the standard for which they review.

Mr. Langello adds on to Mr. Conner's comment in reference to the engineer letter or support, and that that would helpful to have on Mr. Royer's behalf to show the Board a document that gave them that substantial evidence. He states Mr. Royer's response has been that the engineer wouldn't do it or have time for it.

MOTION: The Planning and Development Board finds that all the variance criteria as listed in the guidelines at Land Development Code Section 3.07.03.E have been met and therefore approves

Project No. 2025080063 for a 22.34 left (West) street side setback variance from the minimum required 25 foot street side setback and 1.2 percent lot coverage variance from the maximum allowed 35 percent lot coverage for a pump house at 3 Pelican Lane, subject to the following condition;

a. The applicant will provide a window on the front of the structure for aesthetic purposes only. The window does not have to be operable.

Motion to approve by: Michael Goodman
Seconded by: Anthony Lombardo
Anthony Lombardo – Yes
Dan Wilcox – Yes
Timothy Conner – No
Michael Goodman – Yes
Ron Long – No
Mark Langello (Chair) – No
Motion tied 3-3.

MOTION: The Planning and Development Board finds that all the variance criteria as listed in the guidelines at Land Development Code Section 3.07.03.E have not been met and therefore denies Project No. 2025080063 on the basis that it doesn't meet the minimum relief necessary for a pump house at 3 Pelican Lane. (Parcel No. 23-11-31-5300-00000-0130).

Motion to deny by: Ron Long
Seconded By: Timothy Conner
Anthony Lombardo – Nay
Dan Wilcox – Nay
Timothy Conner – Aye
Michael Goodman – Nay
Ron Long – Aye
Mark Langello (Chair) – Aye
Motion tied 3-3.

Mr. Langello asks to hear from Ms. Spector on guidance of how to proceed. She echoes Mr. Langello's previous comment that we do need a decision tonight from the Board. She states the Mr. Conners' comments were very poignant in pointing out that the Board has asked for competent substantial evidence and not received competent substantial evidence. She states that the attorney that is here is not an expert and he can't speak to these issues as an expert, and that he has not presented anything from an expert that can speak to these matters. She states the Board is solid in a decision to deny this request and she encourages the Board to reconsider their decision in regard to the tie tonight.

Mr. Goodman proposes to meet in the middle and grant a height of 6' for the structure. He states that he is six feet tall and that he could get into a shed 6' tall. He states that he has pool equipment with pumps at least 3' tall. He states lets meet in the middle and put this to bed.

Mr. Langello responds to Mr. Goodman's proposal and states that he still owns a house right on the ocean, significantly closer and he had all his pool equipment/pumps outside of any structure for 15-20 years. He states after time the equipment had rusted out so he built a pumphouse greater is size to what he's asking for and it all rusted out again anyways. He states not to say its not a good thing to enclose it, but that you don't have to enclose the equipment and that they do function with more air without it. Mr. Langello states meeting in the middle may give him what he

doesn't want. Mr. Langello references that there were options available to Mr. Royer to put the structure in a different location that wouldn't have any issue.

Mr. Goodman states that someone could make a motion to approve the height but require the structure to be up against the house. Mr. Long states that he believes this all boils down to the location of the structure. Mr. Goodman suggest this if he wants an affirmative action tonight. Mr. Conner mentions that they have already approved something he didn't want and it was appealed to the Board of County Commissioners and that if they approve something again he doesn't want they will be back here six months from now doing it all over again. He states that he believes they need to act on the application.

Mr. Langello mentions that they have given a lot of leeway here but they also need to consider that the neighborhood keeps showing up and giving their testimony, and that it matters as well. He states as far as he can recall they have heard no positive remarks from the neighborhood in favor of the request and that they have heard no competent substantial evidence that this is really necessary.

Mr. Goodman mentions that he wonders if the objective is to get a screen from the street. Mr. Langello states that he asked this question to the applicant because that was his opinion as well, and if that is the intent he recommends landscaping but he does not believe that it's the only intent here.

The Board asks Mr. Royer to come back up to see if there is a potential compromise or solution. Mr. Royer states that when he went to the engineering draftsmen, they asked if he already had a permit. He states they told him it would costs a few thousand dollars to draft the plans. He states that he did not want to pay that expense and still not get approval. He states he is not open to tearing down the stucco on his house to connect the structure.

Mr. Goodman suggests taking the structure and flipping the location to the back of the property rather than being on the front corner. Mr. Langello clarifies that Mr. Goodman suggested putting the structure along the back property line. Mr. Royer clarifies that he's willing to do that but it's still going to be away from the primary structure, not attached. Mr. Langello asks from clarification from Mr. Royer if he is amendable to what Mr. Goodman is proposing as a compromise. Mr. Royer states yes, to make this work he is but to have a continuance and he will bring forth a presentation to reflect as much.

Ms. Kenny clarifies that if the pumphouse is moved to the rear and put in line with the house, it is going to require an additional rear setback variance. Mr. Langello clarifies to the applicant that what he is asking for, in and of itself, does not meet the requirements, and will require a variance. He states Mr. Royer will modify his original request with another drawing with substantial evidence on his behalf. Mr. Royer states that he understands this but asks the Board what they would like to see in terms of height and that at minimum he could probably go down to 8' high.

Ms. Kenny clarifies that per our code; the definition of height is the mean roof height which is the average between the bottom and the pitch. She states if the Board has something else in mind when discussing the height, they need to clarify that.

MOTION: The Planning and Development Board continues the variance request to give the applicant time to modify the application. Continuing the variance request to the August 11th Planning and Development Board haring will preserve public notice and provide an opportunity for staff or the applicant to provide additional information.

Mr. Langello asks about this side bar happening with Staff. Ms. Spector asks for few minutes to research something brought to their attention.

Ms. Spector clarifies that the concern brought by a member of the public was because the survey was prepared by SWA and signed by Mr. Wilcox, if he should have recused himself like he has done in other cases. She states they have confirmed with Mr. Wilcox and that is their understanding based on the date on the survey that it was not prepared for this variance and as such he had no financial gain from preparation of the survey in advance because of this variance. She clarifies that no recusal was required.

Motion to continue by: Timothy Conner
Second by: Michael Goodman
Anthony Lombardo – Yay
Dan Wilcox – Yay
Timothy Conner – Yes
Michael Goodman – Yes
Ron Long – Yes
Mark Langello (Chair) – Yes
Motion carries unanimously.

6. Staff Comments.

   Ms. Kenny informs the Board of some changes within staff.

7. Board Comments.

8. Public Comments – Each speaker will be allowed up to three minutes to address the Planning and Development Board on any item or topic not on the agenda.

9. Adjournment.
   Motion to adjourn by: Ron Long
   Meeting adjourned at 07:50 P.M.

Adam Mengel, AICP, LEED AP BD+C

From: Jackie OConnell <[redacted]yahoo.com>
Sent: Tuesday, June 3, 2025 10:02 AM
To: Planning Dept
Subject: Zoning variance

Hello,
Would you confirm whether a new request has been submitted for
3 Pelican Lane, Flagler Beach.

If so, please provide the online (guest) access code for the request.

Will it be presented at July meeting?
Thank you,
Jackie O'C

Please excuse typos! Sent from my iPhone

Adam Mengel, AICP, LEED AP BD+C

From: Hannah Lademann
Sent: Tuesday, June 3, 2025 10:07 AM
To: Jackie OConnell; Planning Dept
Subject: RE: Zoning variance

Good morning,

Yes, Mr. Royer did submit a new variance application for 3 Pelican Lane. You can find it using AR #5689 on our online portal. He is set to be on the June 18th Technical Review Committee agenda and then should subsequently fall on the July 8th Planning and Development Board agenda. Let me know if you have any other questions.

Hannah Lademann
Planner
E: [redacted]flaglercounty.gov | V: 386-313-4069 | W: www.flaglercounty.gov

Flagler County Board of County Commissioners

Bunnell, FL 32110

The mission of Flagler County is to provide high-quality services through a responsive workforce committed to excellence, integrity, in collaboration with the cities and to act as a fiscally responsible steward.

-----Original Message-----
From: Jackie OConnell <[redacted]yahoo.com>
Sent: Tuesday, June 3, 2025 10:02 AM
To: Planning Dept <[redacted]flaglercounty.gov>
Subject: Zoning variance

Hello,
Would you confirm whether a new request has been submitted for
3 Pelican Lane, Flagler Beach.

If so, please provide the online (guest) access code for the request.

Will it be presented at July meeting?
Thank you,
Jackie O'C

Please excuse typos! Sent from my iPhone

Adam Mengel, AICP, LEED AP BD+C

From: Jackie OConnell <[redacted]yahoo.com>
Sent: Thursday, June 19, 2025 8:17 AM
To: Planning Dept; Sean S. Moylan
Subject: Feb 11, 2025 Minutes Correction re Project 2024110031 3 Pelican Lane

Planning/Zoning and Legal Team,

As discussed at the June Planning and Development Board meeting, the minutes from the February Board meeting are being revised for voting correction(s) and will be submitted to the Board at the July meeting. **The February minutes also omit any mention of the Public Comments, submitted via email by me and Ms. Nancye Walls, which were referenced by Mr. Mengel at the February meeting and copies provided to the Board members.** By only referencing the two Public Commenters who spoke in favor of the variance request, and omitting the two who submitted opposition, **there is a significant bias in the meeting minutes and public records.** You'll recall that I alerted you to this omission and sent an objection when Applicant took an appeal to the County Commission.

Please revise the February Board minutes to reflect the public comments in opposition to the variance request which were presented at the February meeting. (These Board minutes may be referenced in the updated variance request which Applicant is pursuing.)

Thank you,

Jackie O'Connell
7 and 8 Mockingbird Lane, FB

336.512.9671 mobile
Excuse brevity and typos, sent from mobile device

Adam Mengel, AICP, LEED AP BD+C

From: Jackie OConnell <[redacted]yahoo.com>
Sent: Thursday, July 3, 2025 1:18 PM
To: Hannah Lademann; Planning Dept
Subject: Re: Zoning meeting July 8 - Agenda

Will the Agenda and Backup for next Tuesday's meeting be posted today? I don't yet see it on your website.
Thanks, Jackie O'Connell
336.512.9671 mobile
Excuse brevity and typos, sent from mobile device

> On Jun 3, 2025, at 10:07 AM, Hannah Lademann <[redacted]flaglercounty.gov> wrote:
>
> Good morning,
>
> Yes, Mr. Royer did submit a new variance application for 3 Pelican Lane. You can find it using AR #5689 on our online portal. He is set to be on the June 18th Technical Review Committee agenda and then should subsequently fall on the July 8th Planning and Development Board agenda. Let me know if you have any other questions.
>
>
> Hannah Lademann
> Planner
> E:[redacted]flaglercounty.gov | V: 386-313-4069 | W: www.flaglercounty.gov
>
> Flagler County Board of County Commissioners
>
> Bunnell, FL 32110
>
> The mission of Flagler County is to provide high-quality services through a responsive workforce committed to excellence, integrity, in collaboration with the cities and to act as a fiscally responsible steward.
>
> -----Original Message-----
> From: Jackie OConnell <[redacted]yahoo.com>
> Sent: Tuesday, June 3, 2025 10:02 AM
> To: Planning Dept <[redacted]flaglercounty.gov>
> Subject: Zoning variance
>
> Hello,
> Would you confirm whether a new request has been submitted for
> 3 Pelican Lane, Flagler Beach.
>
> If so, please provide the online (guest) access code for the request.
>
> Will it be presented at July meeting?
> Thank you,
> Jackie O'C
>
> Please excuse typos! Sent from my iPhone

Adam Mengel, AICP, LEED AP BD+C

From: Hannah Lademann
Sent: Thursday, July 3, 2025 2:08 PM
To: Jackie OConnell; Planning Dept
Subject: RE: Zoning meeting July 8 - Agenda

Yes, it should be posted before the end of the day. They are finishing up some staff reports as we speak.

Hannah Lademann
Planner
E: [redacted]flaglercounty.gov | V: 386-313-4069 | W: www.flaglercounty.gov

Flagler County Board of County Commissioners

Bunnell, FL 32110

The mission of Flagler County is to provide high-quality services through a responsive workforce committed to excellence, integrity, in collaboration with the cities and to act as a fiscally responsible steward.

-----Original Message-----
From: Jackie OConnell <[redacted]yahoo.com>
Sent: Thursday, July 3, 2025 1:18 PM
To: Hannah Lademann <[redacted]flaglercounty.gov>; Planning Dept <[redacted]flaglercounty.gov>
Subject: Re: Zoning meeting July 8 - Agenda

Will the Agenda and Backup for next Tuesday's meeting be posted today? I don't yet see it on your website.
Thanks, Jackie O'Connell
336.512.9671 mobile
Excuse brevity and typos, sent from mobile device

> On Jun 3, 2025, at 10:07 AM, Hannah Lademann <[redacted]flaglercounty.gov> wrote:
>
> Good morning,
>
> Yes, Mr. Royer did submit a new variance application for 3 Pelican Lane. You can find it using AR #5689 on our online portal. He is set to be on the June 18th Technical Review Committee agenda and then should subsequently fall on the July 8th Planning and Development Board agenda. Let me know if you have any other questions.
>
>
> Hannah Lademann
> Planner
> E: [redacted]flaglercounty.gov | V: 386-313-4069 | W: www.flaglercounty.gov
>
> Flagler County Board of County Commissioners
>
> Bunnell, FL 32110
>
> The mission of Flagler County is to provide high-quality services through a responsive workforce committed to excellence, integrity, in collaboration with the cities and to act as a fiscally responsible steward.

>
> -----Original Message-----
> From: Jackie OConnell <[redacted]yahoo.com>
> Sent: Tuesday, June 3, 2025 10:02 AM
> To: Planning Dept <[redacted]flaglercounty.gov>
> Subject: Zoning variance
>
> Hello,
> Would you confirm whether a new request has been submitted for
> 3 Pelican Lane, Flagler Beach.
>
> If so, please provide the online (guest) access code for the request.
>
> Will it be presented at July meeting?
> Thank you,
> Jackie O'C
>
> Please excuse typos! Sent from my iPhone

Adam Mengel, AICP, LEED AP BD+C

From: Jackie OConnell <[redacted]yahoo.com>
Sent: Thursday, July 3, 2025 2:18 PM
To: Hannah Lademann
Cc: Planning Dept
Subject: Re: Zoning meeting July 8 - Agenda

Thanks. Happy 4th to you!
336.512.9671 mobile
Excuse brevity and typos, sent from mobile device

> On Jul 3, 2025, at 2:07 PM, Hannah Lademann <[redacted]flaglercounty.gov> wrote:
>
> Yes, it should be posted before the end of the day. They are finishing up some staff reports as we speak.
>
> Hannah Lademann
> Planner
> E:[redacted]flaglercounty.gov | V: 386-313-4069 | W: www.flaglercounty.gov
>
> Flagler County Board of County Commissioners
>
> Bunnell, FL 32110
>
> The mission of Flagler County is to provide high-quality services through a responsive workforce committed to excellence, integrity, in collaboration with the cities and to act as a fiscally responsible steward.
>
> -----Original Message-----
> From: Jackie OConnell <[redacted]yahoo.com>
> Sent: Thursday, July 3, 2025 1:18 PM
> To: Hannah Lademann <[redacted]flaglercounty.gov>; Planning Dept <[redacted]flaglercounty.gov>
> Subject: Re: Zoning meeting July 8 - Agenda
>
> Will the Agenda and Backup for next Tuesday's meeting be posted today? I don't yet see it on your website.
> Thanks, Jackie O'Connell
> 336.512.9671 mobile
> Excuse brevity and typos, sent from mobile device
>
>> On Jun 3, 2025, at 10:07 AM, Hannah Lademann <[redacted]flaglercounty.gov> wrote:
>>
>> Good morning,
>>
>> Yes, Mr. Royer did submit a new variance application for 3 Pelican Lane. You can find it using AR #5689 on our online portal. He is set to be on the June 18th Technical Review Committee agenda and then should subsequently fall on the July 8th Planning and Development Board agenda. Let me know if you have any other questions.
>>
>>
>> Hannah Lademann
>> Planner
>> E:[redacted]flaglercounty.gov | V: 386-313-4069 | W: www.flaglercounty.gov

>>
>> Flagler County Board of County Commissioners
>>
>> Bunnell, FL 32110
>>
>> The mission of Flagler County is to provide high-quality services through a responsive workforce committed to excellence, integrity, in collaboration with the cities and to act as a fiscally responsible steward.
>>
>> -----Original Message-----
>> From: Jackie OConnell <[redacted]yahoo.com>
>> Sent: Tuesday, June 3, 2025 10:02 AM
>> To: Planning Dept <[redacted]flaglercounty.gov>
>> Subject: Zoning variance
>>
>> Hello,
>> Would you confirm whether a new request has been submitted for
>> 3 Pelican Lane, Flagler Beach.
>>
>> If so, please provide the online (guest) access code for the request.
>>
>> Will it be presented at July meeting?
>> Thank you,
>> Jackie O'C
>>
>> Please excuse typos! Sent from my iPhone
>

Adam Mengel, AICP, LEED AP BD+C

From: rental POC, Nan <[redacted]gmail.com>
Sent: Monday, July 7, 2025 9:52 AM
To: Planning Dept
Subject: Scanned Document 6
Attachments: Scanned Document 6.pdf

Nancye walls comments on 3 Pelican Lane, Project 2025050042-AR 5689

Adam Mengel, AICP, LEED AP BD+C

From: Adam Mengel, AICP, LEED AP BD+C
Sent: Monday, July 7, 2025 10:09 AM
To: Adam Mengel, AICP, LEED AP BD+C
Subject: FW: Scanned Document 6 (Planning and Development Board public comment on Item No. 8)
Attachments: Scanned Document 6.pdf

Importance: High

Hello Planning and Development Board members:

Please see below and attached regarding public comment received after publication of the Planning and Development Board meeting agenda. This comment is related to Item No. 8, Mr. Royer's resubmitted variance application at 3 Pelican Lane (Project No. 2025050043/AR No. 5689).

Please contact us with any questions.

Thank you,

Adam

Adam Mengel, AICP, LEED AP BD+C
Growth Management Director

E: [redacted]flaglercounty.gov | V: 386-313-4065 | W: www.flaglercounty.gov

Flagler County Board of County Commissioners
1769 E. Moody Blvd., Bldg 2
Bunnell, FL 32110

The mission of Flagler County is to provide high-quality services through a responsive workforce committed to excellence, integrity, in collaboration with the cities and to act as a fiscally responsible steward.

From: rental POC, Nan <[redacted]gmail.com>
Sent: Monday, July 7, 2025 9:52 AM
To: Planning Dept <[redacted]flaglercounty.gov>
Subject: Scanned Document 6

Nancye walls comments on 3 Pelican Lane, Project 2025050042-AR 5689

Comments Regarding 3 Pelican Lane Project No. 2025050042- AR5689-
Variance in the Residential Limited Commercial District

Good Morning,

My name is Nancye Walls. I am the owner of 7 Pelican Lane which is on the west side of Mockingbird Lane directly across from 3 Pelican Lane.
I do not agree to approve any variance beyond accommodating the house footprint that existed when Mr. Royner purchased 3 Pelican Lane in 2017.

The variance request is to build pool pump house and fence that would extend almost to his west side property line adjacent to the 50 foot wide road – Mockingbird. There are 6 residences and vacant lots on Mockingbird. Building this close to the road will prevent parallel parking for cars, RVs, boats that are used by residence and/or come in the neighborhood with friends and family. Also space is needed for the routine Amazon truck, other delivery and Emergency vehicles. Additionally the height of the pool house is a safety issue that can block the view of children and adult pedestrians and vehicles and the structure on planned location would be an eye-sore.

As background:
There are 20 Plus lots in this River-Beach development started in 1960s. There are 3 roads in the development – Pelican, Mockingbird and Cardinal Lanes – each is a 50 foot wide parcel of land. Some portion of each road is a combination of gravel, sand and grass. The gravel passageway is a single lane section within the road so it may appear that parking is available on the grass and sand, but technically vehicles should not park on the road. Each home owner should have an easement on their property wide enough for extra and visitors parking and for rainwater drainage. Dealing with rain water is a growing concern that will increase when the 3-4 vacant lots along Mockingbird are developed.
Mr. Royner has a large house (3,500 sqare feet including driveway and porches) but his lot is only 7,500 square feet. The east side and front of his property may be an option or the rear section or some portion of his house which has a permanent roof may be repurposed for his endless lap pool and pumping equipment.

Respectfully;

NANCYE WALLS, 571-426-2867

Adam Mengel, AICP, LEED AP BD+C

From: Simone Kenny, AICP
Sent: Tuesday, July 8, 2025 3:15 PM
To: Simone Kenny, AICP
Cc: Adam Mengel, AICP, LEED AP BD+C; Hannah Lademann; Chuck Merenda
Subject: FW: Scanned Document 6 (Planning and Development Board public comment on Item No. 8)
Attachments: Public Comment (AR 5689).pdf

Importance: High

Hello Planning and Development Board members,

Please see the attached document for another public comment regarding Item No. 8, Mr. Royer's resubmitted variance application at 3 Pelican Lane (Project No. 2025050043/AR No. 5689).

Please contact us with any questions,
Simone

Simone Kenny, AICP
Senior Planner

E: [redacted]flaglercounty.gov | V: 386-313-4067 | W: www.flaglercounty.gov

Flagler County Board of County Commissioners

Bunnell, FL 32110

The mission of Flagler County is to provide high-quality services through a responsive workforce committed to excellence, integrity, in collaboration with the cities and to act as a fiscally responsible steward.

From: Adam Mengel, AICP, LEED AP BD+C <[redacted]flaglercounty.gov>
Sent: Monday, July 7, 2025 10:09 AM
To: Adam Mengel, AICP, LEED AP BD+C <[redacted]flaglercounty.gov>
Subject: FW: Scanned Document 6 (Planning and Development Board public comment on Item No. 8)
Importance: High

Hello Planning and Development Board members:

Please see below and attached regarding public comment received after publication of the Planning and Development Board meeting agenda. This comment is related to Item No. 8, Mr. Royer's resubmitted variance application at 3 Pelican Lane (Project No. 2025050043/AR No. 5689).

Please contact us with any questions.

Thank you,

Adam

Adam Mengel, AICP, LEED AP BD+C
Growth Management Director

E: [redacted]flaglercounty.gov | V: 386-313-4065 | W: www.flaglercounty.gov

Flagler County Board of County Commissioners
1769 E. Moody Blvd., Bldg 2
Bunnell, FL 32110

The mission of Flagler County is to provide high-quality services through a responsive workforce committed to excellence, integrity, in collaboration with the cities and to act as a fiscally responsible steward.

From: rental POC, Nan <[redacted]gmail.com>
Sent: Monday, July 7, 2025 9:52 AM
To: Planning Dept <[redacted]flaglercounty.gov>
Subject: Scanned Document 6

Nancye walls comments on 3 Pelican Lane, Project 2025050042-AR 5689

July 8, 2025

Flagler County Planning and Development Board
1769 E. Moody Blvd., Bldg 2
Bunnell, FL 32110

RE: Project No. 2025050042 – AR 5689 – Variance in the R/C (Residential Limited Commercial) District

Dear sirs:

I am opposed to the requested variance for the following reasons:

1. I own two properties at the end of Pelican Lane. Pelican Lane slopes from route A1A down to the intracoastal waterway and all the stormwater runoff ends up in both of my yards every time we have a heavy rain.

2. The lots in the subdivision are all small under 10,000 ft.^{2}.

3. Granting a variance for a large shed roof will add to the water runoff and more accumulation on my property, which I don't need.

4. By approving this variance you will be setting a precedent for this type of request.

5. See 3 photos.

   a. Pelican Lane looking up to A1A.
   b. Sand and stone that washes down after storms.
   c. Flooded yard.

Sincerely,

George E. Benoit

Adam Mengel, AICP, LEED AP BD+C

From: Adam Mengel, AICP, LEED AP BD+C
Sent: Friday, July 18, 2025 4:20 PM
To: Jackie OConnell
Cc: PublicRecords; Simone Kenny, AICP
Subject: Variances within River Beach subdivision

Hi Ms. O'Connell:

I checked Department records for variances within River Beach using the following search terms:

- "23-11-31-5300"
- "Cardinal"
- "Mockingbird"
- "Pelican"
- "River Beach"

No files were found other than the variance files associated with Mr. Royer's request at 3 Pelican Lane.

Please contact me with any questions.

Thank you,

Adam

Adam Mengel, AICP, LEED AP BD+C
Growth Management Director

E: [redacted]flaglercounty.gov | V: 386-313-4065 | W: www.flaglercounty.gov

Flagler County Board of County Commissioners
1769 E. Moody Blvd., Bldg 2
Bunnell, FL 32110

The mission of Flagler County is to provide high-quality services through a responsive workforce committed to excellence, integrity, in collaboration with the cities and to act as a fiscally responsible steward.

Adam Mengel, AICP, LEED AP BD+C

From: Jackie OConnell <[redacted]yahoo.com>
Sent: Sunday, July 20, 2025 5:46 PM
To: Adam Mengel, AICP, LEED AP BD+C
Cc: PublicRecords; Simone Kenny, AICP
Subject: Re: Variances within River Beach subdivision

Follow Up Flag: Follow up
Flag Status: Flagged

Thanks to you and Simone for the assistance on Friday. At the next meeting, I plan to say/write "As confirmed in a recent search of public records, no other variances have been sought, nor granted, in our subdivision."
Let me know of any objection.

Jackie O'Connell
336.512.9671 mobile
Excuse brevity and typos, sent from mobile device

On Jul 18, 2025, at 4:20 PM, Adam Mengel, AICP, LEED AP BD+C <[redacted]flaglercounty.gov> wrote:

Hi Ms. O'Connell:

I checked Department records for variances within River Beach using the following search terms:

1. "23-11-31-5300"
2. "Cardinal"
3. "Mockingbird"
4. "Pelican"
5. "River Beach"

No files were found other than the variance files associated with Mr. Royer's request at 3 Pelican Lane.

Please contact me with any questions.

Thank you,

Adam

Adam Mengel, AICP, LEED AP BD+C
Growth Management Director

E: [redacted]flaglercounty.gov | V: 386-313-4065 | W: www.flaglercounty.gov

Flagler County Board of County Commissioners
1769 E. Moody Blvd., Bldg 2
Bunnell, FL 32110

The mission of Flagler County is to provide high-quality services through a responsive workforce committed to excellence, integrity, in collaboration with the cities and to act as a fiscally responsible steward.

Adam Mengel, AICP, LEED AP BD+C

From: Jackie O'Connell <[redacted]yahoo.com>
Sent: Friday, August 8, 2025 8:51 AM
To: Simone Kenny, AICP; Planning Dept
Subject: 3 Pelican Lane - Badu Stream II info
Attachments: Badu Stream plumbing photo.pdf; Installation-Manual-BaduStream-II description.pdf

Good morning Simone,
I did a quick google search of the Badu pumps which Mr. Royer says he will install. Here is the link to the full Installation guide. I've attached two excerpts which would be helpful to send to the Board in their package.
Thank you, Jackie

From Badu site

https://www.badujet.com/wp-content/uploads/2021/03/Installation-Manual-BaduStream-II.pdf

Jackie O'Connell

Plumbing installation for the BaduStream ***Package D (system include three jet housings & two pumps)***

NOTE: ***(Three Jet Installation)*** *Increase the pipe size to 6" when jets are more than 30 ft. from the pump. Use 6" x 4" bushings after 4" manifold tees.*

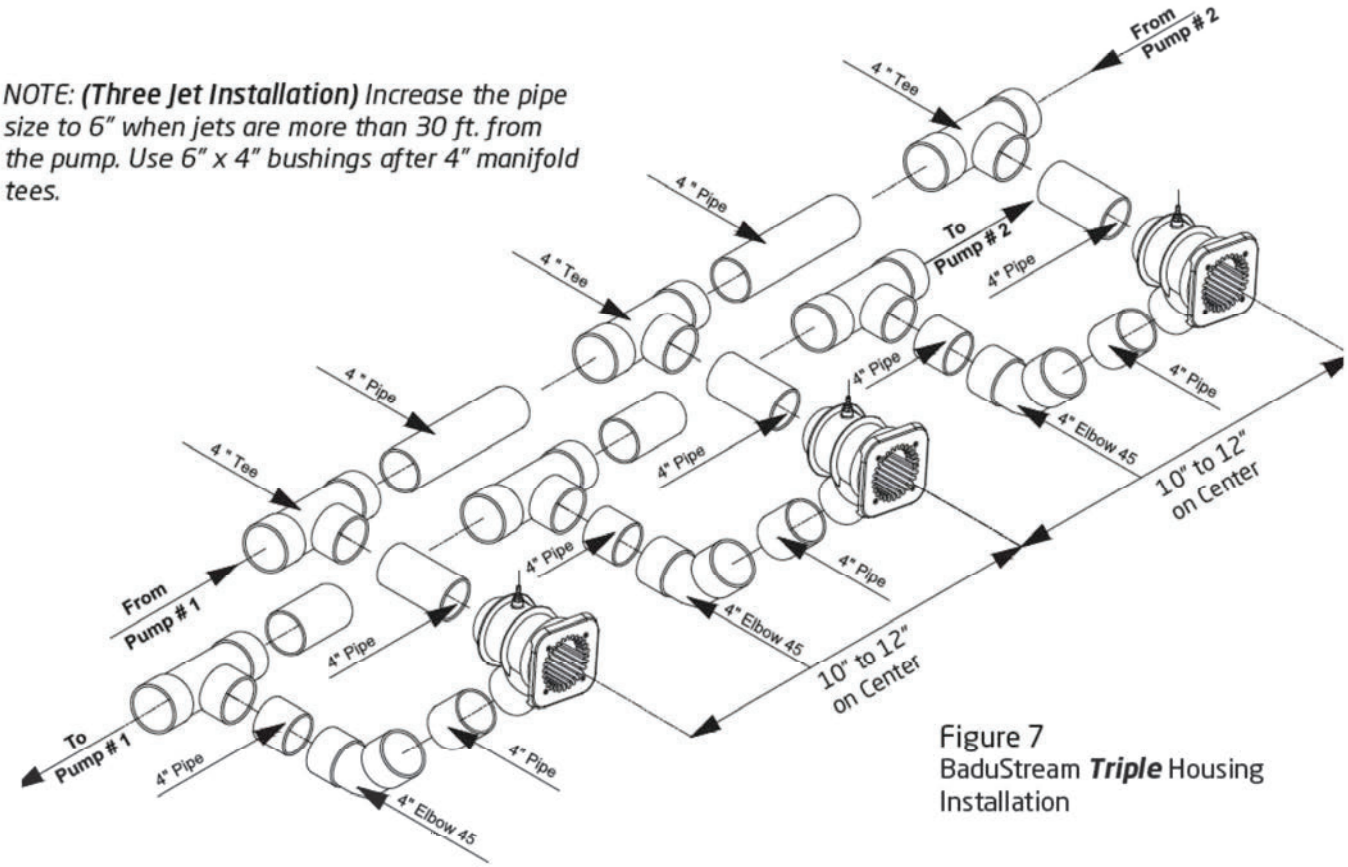

Figure 7
BaduStream ***Triple*** Housing Installation

IMPORTANT NOTE: ***CHECK VALVES <u>MUST BE</u>*** *used on the discharge side of each pump. Minimum 4" pipe between pump and BaduStream plumbing manifold.*





Figure 8
Check Valves Installed

2 General Description

Badu®Stream *II*

The Badu SwimJet Systems from Speck Pumps are designed to be installed during the construction of your pool to create a water treadmill for anyone wanting a therapeutic and effective exercise.

The Badu SwimJet Systems can be installed in any type of pool, large or small, from gunite to vinyl liner. It has no protruding parts ensuring pool user's safety, is very compact and installs at minimal cost. The self-contained, flush-mounted unit is a jet-propulsion system that pumps water into the pool creating a current in excess of 5,700 gallons per minute from a single recessed jet housing.

Topping off the experience is the pulsating massage hose which can be attached to the jet nozzles for easy and convenient massage treatments for joints and muscles. *(NOTE: The massage hose is sold separately.)*

3 Installation Information

Receiving Information

1. Upon receipt of the swimjet system, check the cartons for damage. Open each carton and check the pump(s), jet housing(s), and control box for concealed damage, such as cracks, dents, or a bent base. If damage is found, contact the shipper or distributor where the swimjet was purchased.

2. Inspect the contents of each carton and verify that all parts are included. *(See Image 1)*

A. Flush-mount jet housing

B. Square, anti-entrapment cover (8¼" x 8¼") undetectable pump suction. *(Optional Round Cover available)*

C. Adjustable water flow jet nozzle

D. Air regulator adjusts amount of air bubbles in water flow.

E. Control box complete with GFCI and WiFi control module.

F. SPECK Model 21-80/33GS 4.0 HP (or a SPECK Model 72-VI 3.5 HP) self-priming, single phase plastic pump with built-in thermal overload *(no motor starter required)*. Optional three phase pump and control box available. *(NOTE: Flooded suction pump available for installation below water level.)*

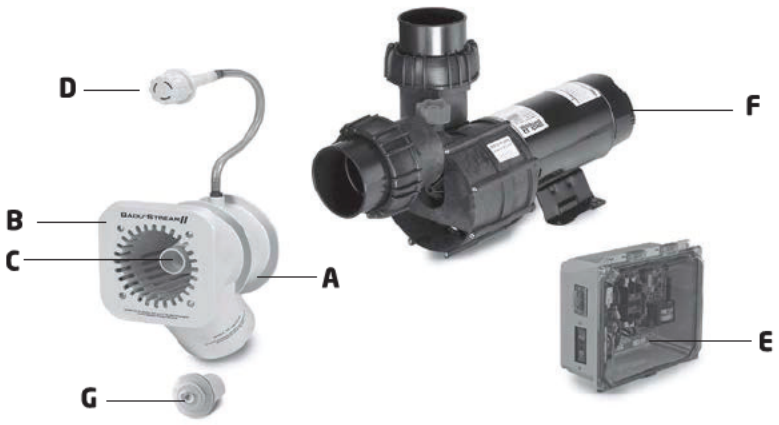

Image 1
BaduStream II System (1 jet & 4 HP pump)

G. System (ON/OFF) LED Touch Button - Complete with 1.5" threaded housing fits into any 1.5" return fitting. The Touch button turns the swimjet system ON/OFF. Waterproof button may be installed below water level.

Adam Mengel, AICP, LEED AP BD+C

From: Jackie OConnell <[redacted]yahoo.com>
Sent: Sunday, August 10, 2025 3:58 PM
To: Planning Dept; Sean S. Moylan
Subject: July Minutes - 3 Pelican

I noticed that there is no mention of the two Public Comments sent via email, from Ms Walls and Mr Benoit, in opposition to the Pelican variance request. Would you please update the minutes to reference this opposition before the Board approves.
Thank you,
Jackie O'Connell

Excuse brevity and typos, sent from mobile device

Adam Mengel, AICP, LEED AP BD+C

From: Sean S. Moylan
Sent: Monday, August 11, 2025 7:59 AM
To: Adam Mengel, AICP, LEED AP BD+C; Simone Kenny, AICP; Hannah Lademann; Sarah Spector
Subject: Fw: July Minutes - 3 Pelican

The written comments are part of the record but don't have to be mentioned or spread on the mins. I suggest treating these written cmts just as have historically treated any other.

Get Outlook for iOS

From: Jackie OConnell <[redacted]yahoo.com>
Sent: Sunday, August 10, 2025 3:57:32 PM
To: Planning Dept <[redacted]flaglercounty.gov>; Sean S. Moylan <[redacted]flaglercounty.gov>
Subject: July Minutes - 3 Pelican

I noticed that there is no mention of the two Public Comments sent via email, from Ms Walls and Mr Benoit, in opposition to the Pelican variance request. Would you please update the minutes to reference this opposition before the Board approves.
Thank you,
Jackie O'Connell

Excuse brevity and typos, sent from mobile device

Adam Mengel, AICP, LEED AP BD+C

From: Simone Kenny, AICP
Sent: Monday, August 11, 2025 8:08 AM
To: Jackie OConnell; Planning Dept; Sean S. Moylan
Subject: RE: July Minutes - 3 Pelican

Hello Jackie,

The meeting minutes reflect discussion and actions taken during the meeting. Public Comments are included in the record of each item which are published as part of the backup. They are not included in the minutes.

Thank you,
Simone

Simone Kenny, AICP
Senior Planner
E: [redacted]flaglercounty.gov | V: 386-313-4067 | W: www.flaglercounty.gov

Flagler County Board of County Commissioners

Bunnell, FL 32110

The mission of Flagler County is to provide high-quality services through a responsive workforce committed to excellence, integrity, in collaboration with the cities and to act as a fiscally responsible steward.

-----Original Message-----
From: Jackie OConnell <[redacted]yahoo.com>
Sent: Sunday, August 10, 2025 3:58 PM
To: Planning Dept <[redacted]flaglercounty.gov>; Sean S. Moylan <[redacted]flaglercounty.gov>
Subject: July Minutes - 3 Pelican

I noticed that there is no mention of the two Public Comments sent via email, from Ms Walls and Mr Benoit, in opposition to the Pelican variance request. Would you please update the minutes to reference this opposition before the Board approves.
Thank you,
Jackie O'Connell

Excuse brevity and typos, sent from mobile device

Adam Mengel, AICP, LEED AP BD+C

From: Jackie OConnell <[redacted]yahoo.com>
Sent: Monday, August 11, 2025 9:46 AM
To: Simone Kenny, AICP
Cc: Planning Dept; Sean S. Moylan
Subject: Re: July Minutes - 3 Pelican

Thanks for your quick response. Let me clarify...I'm not suggesting the actual emailed comments be included in the minutes. I'm requesting that the minutes reflect there were (the existence of) two (emailed) opposing "public comments" received and shared with the Board. If a reference isn't part of the official record of the meeting, no one will know there was additional opposition.

When Mr Royer recently appealed to County Commission, a similar omission was in the Planning Board's February minutes. Mr. Mengel had to verbally state to the Commission there was additional opposition, not referenced in the Planning minutes. Subsequently, the Planning Board minutes for February were amended to reference the emailed opposition.

Shouldn't a similar reference, noting that two opposing emailed comments were received, be included in the July minutes for the Planning Board?

336.512.9671 mobile
Excuse brevity and typos, sent from mobile device

> On Aug 11, 2025, at 8:08 AM, Simone Kenny, AICP <[redacted]flaglercounty.gov> wrote:
>
> Hello Jackie,
>
> The meeting minutes reflect discussion and actions taken during the meeting. Public Comments are included in the record of each item which are published as part of the backup. They are not included in the minutes.
>
> Thank you,
> Simone
>
>
>
>
> Simone Kenny, AICP
> Senior Planner
> E:[redacted]flaglercounty.gov | V: 386-313-4067 | W: www.flaglercounty.gov
>
> Flagler County Board of County Commissioners
>
> Bunnell, FL 32110
>
> The mission of Flagler County is to provide high-quality services through a responsive workforce committed to excellence, integrity, in collaboration with the cities and to act as a fiscally responsible steward.
>
> -----Original Message-----

> From: Jackie OConnell <[redacted]yahoo.com>
> Sent: Sunday, August 10, 2025 3:58 PM
> To: Planning Dept <[redacted]flaglercounty.gov>; Sean S. Moylan <[redacted]flaglercounty.gov>
> Subject: July Minutes - 3 Pelican
>
> I noticed that there is no mention of the two Public Comments sent via email, from Ms Walls and Mr Benoit, in opposition to the Pelican variance request. Would you please update the minutes to reference this opposition before the Board approves.
> Thank you,
> Jackie O'Connell
>
> Excuse brevity and typos, sent from mobile device

Adam Mengel, AICP, LEED AP BD+C

From: Adam Mengel, AICP, LEED AP BD+C
Sent: Tuesday, August 12, 2025 2:18 PM
To: Adam Mengel, AICP, LEED AP BD+C
Cc: Chuck Merenda; Simone Kenny, AICP
Subject: FW: Objection to Variance Request
Attachments: 3 Pelican Ray - GEB ltr to County.pdf

Importance: High

Planning and Development Board members:

Please see below and attached regarding Agenda Item No. 5.

Please contact us with any questions.

Thank you,

Adam

From: George Benoit <[redacted]icloud.com>
Sent: Tuesday, August 12, 2025 2:01 PM
To: Simone Kenny, AICP <[redacted]flaglercounty.gov>
Cc: O'Connell Daniel & Jacqueline <[redacted]yahoo.com>
Subject: Objection to Variance Request

Flagler County Zoning and Planning Department,

Re: Project No. 2025050043
Please include my objection to the requested variance that I had sent in for a previous hearing.

George E Benoit
17 Pelican Ln.

George

July 8, 2025

Flagler County Planning and Development Board
1769 E. Moody Blvd., Bldg 2
Bunnell, FL 32110

RE: Project No. 2025050042 – AR 5689 – Variance in the R/C (Residential Limited Commercial) District

Dear sirs:

I am opposed to the requested variance for the following reasons:

1. I own two properties at the end of Pelican Lane. Pelican Lane slopes from route A1A down to the intracoastal waterway and all the stormwater runoff ends up in both of my yards every time we have a heavy rain.

2. The lots in the subdivision are all small under 10,000 ft.^{2}.

3. Granting a variance for a large shed roof will add to the water runoff and more accumulation on my property, which I don't need.

4. By approving this variance you will be setting a precedent for this type of request.

5. See 3 photos.

   a. Pelican Lane looking up to A1A.
   b. Sand and stone that washes down after storms.
   c. Flooded yard.

Sincerely,

George E. Benoit

STOP





Adam Mengel, AICP, LEED AP BD+C

From: Jackie OConnell <[redacted]yahoo.com>
Sent: Monday, August 18, 2025 4:16 PM
To: Planning Dept
Subject: Fwd: 3 Pelican - meeting tomorrow - Tuesday morning

Wanted to give a heads up that we will come to your office tomorrow (Tuesday) between 10-noon to discuss questions regarding R/C zoning requirements, procedures for PDB meetings, and appeals to BOCC.
If the appropriate staff won't be available during that time frame, we can shift to 1-3p. Pls advise by 8:30am if the afternoon works better.
Thank you,
Jackie O'Connell

336.512.9671 mobile
Excuse brevity and typos, sent from mobile device

Begin forwarded message:

> **From:** Jackie OConnell <[redacted]yahoo.com>
> **Date:** August 13, 2025 at 11:19:28 AM EDT
> **To:** Simone Kenny AICP <[redacted]flaglercounty.gov>
> **Subject: 3 Pelican**
>
> Hi Simone,
> Would you be available to meet w Dan and me to answer a couple of questions regarding the zoning code/requirements? Probably 30 minutes[redacted] your office.
>
> How does your schedule look for Monday 8/18, anytime, or this Friday 8/15, 11am-5pm. If either will work, you pick the time.
> Thank you,
> Jackie O'Connell
>
> 336.512.9671 mobile
> Excuse brevity and typos, sent from mobile device

Adam Mengel, AICP, LEED AP BD+C

From: Jackie OConnell <[redacted]yahoo.com>
Sent: Monday, August 18, 2025 8:14 PM
To: Simone Kenny, AICP
Cc: Planning Dept
Subject: Re: 3 Pelican - meeting tomorrow - Tuesday morning

Will do, thx
Please excuse typos! Sent from my iPhone

On Aug 18, 2025, at 4:25 PM, Simone Kenny, AICP <[redacted]flaglercounty.gov> wrote:

Hello,

Apologies for missing your earlier email. We have a meeting from 11 am to 12pm and I will be out of the office for meeting after 2pm. To make sure we have enough time to answer your questions, I'd recommend coming a little before 10.

Thank you,
Simone

Simone Kenny, AICP
Senior Planner

E: [redacted]flaglercounty.gov | V: 386-313-4067 | W: www.flaglercounty.gov

Flagler County Board of County Commissioners

Bunnell, FL 32110

<image002.png>

<image001.png> <image003.png>

<image004.png>

<image005.png>

From: Jackie OConnell <[redacted]yahoo.com>
Sent: Monday, August 18, 2025 4:16 PM
To: Planning Dept <[redacted]flaglercounty.gov>
Subject: Fwd: 3 Pelican - meeting tomorrow - Tuesday morning

Wanted to give a heads up that we will come to your office tomorrow (Tuesday) between 10-noon to discuss questions regarding R/C zoning requirements, procedures for PDB meetings, and appeals to BOCC.
If the appropriate staff won't be available during that time frame, we can shift to 1-3p. Pls advise by 8:30am if the afternoon works better.
Thank you,
Jackie O'Connell

336.512.9671 mobile
Excuse brevity and typos, sent from mobile device

Begin forwarded message:

> **From:** Jackie OConnell <[redacted]yahoo.com>
> **Date:** August 13, 2025 at 11:19:28 AM EDT
> **To:** Simone Kenny AICP <[redacted]flaglercounty.gov>
> **Subject: 3 Pelican**
>
> Hi Simone,
> Would you be available to meet w Dan and me to answer a couple of questions regarding the zoning code/requirements? Probably 30 minutes [redacted] your office.
>
> How does your schedule look for Monday 8/18, anytime, or this Friday 8/15, 11am-5pm. If either will work, you pick the time.
> Thank you,
> Jackie O'Connell
>
> 336.512.9671 mobile
> Excuse brevity and typos, sent from mobile device

Adam Mengel, AICP, LEED AP BD+C

From: Jackie OConnell <[redacted]yahoo.com>
Sent: Tuesday, August 19, 2025 3:43 PM
To: Sarah Spector
Cc: Adam Mengel, AICP, LEED AP BD+C; Sean S. Moylan
Subject: Re: follow up Board/Commission meetings

Hello Ms. Spector,

Your email came in while my husband and I were meeting w Ms. Kenny and Lademann. They have probably shared w you a bit more color around our inquiries.

Regarding a tie vote. As you confirmed, the LDC states that in case of quorum and tie-vote, the item fails. This was the situation at the Aug 12 meeting. There was a motion and vote to approve, resulting in a tie, and thus the decision of the Board was that the variance did not pass. The Acting Chair and another Board member stated it was appropriate to move to the next agenda item. The Board vote was not rescinded. Only after the "inquiry/guidance" from Staff did the invalid discussions, motion and vote to continue ensue.

Regarding continuance. The LDC states that only one continuance may be allowed. If your position is that more continuances may be granted in cases of tie vote, then an infinite number of continuances could be needed/granted; this is not documented in Code, nor is it reasonable. In the PDB meeting, Staff stated that there is a maximum of two ("just two") continuances allowed. Which code section (or precedence) states any circumstances that allows for more than one continuance?

Given the importance of timing in "decisions", we request these procedural errors be addressed as soon as possible, certainly within a week. Should the invalid continuance be perpetuated at Sept meeting, there is compounding of a procedural error, not to mention bias in favor of Applicant.

Jackie O'Connell

336.512.9671 mobile
Excuse brevity and typos, sent from mobile device

On Aug 19, 2025, at 10:26 AM, Sarah Spector <[redacted]flaglercounty.gov> wrote:

Good morning, Ms. O'Connell-

As to your first question, Section 2.02.03(5) of the Land Development Code provides that each decision of the planning and development board must be approved by a majority vote of the members present at a meeting in which a quorum is in attendance and voting. In the absence of a majority vote, the item fails.

As to the second question, Section 3.07.03(B)(3) of the Land Development Code allows for one continuance due to lack of necessary info ("If the planning board determines that sufficient factual data was not presented, the planning board may continue the hearing until the next scheduled meeting to allow for the preparation of such factual data. Only one (1) such continuation shall be allowed for each requested variance and/or special exception."). However, there is nothing in the Code that prohibits an additional continuance for other reasons like, here, where the Board had an even number of members and wanted to wait to vote again when there would possibly be an odd number in attendance.

Sarah Spector
Assistant County Attorney

E: [redacted]flaglercounty.gov | V: 386-313-4058 | W: www.flaglercounty.gov

FLAGLER COUNTY FLORIDA

Flagler County Board of County Commissioners
1769 E. Moody Blvd., Bldg 2
Bunnell, FL 32110

The mission of Flagler County is to provide high-quality services through a responsive workforce committed to excellence, integrity, in collaboration with the cities and to act as a fiscally responsible steward.

-----Original Message-----
From: Jackie OConnell <[redacted]yahoo.com>
Sent: Monday, August 18, 2025 9:50 AM
To: Sean S. Moylan <[redacted]flaglercounty.gov>
Subject: Re: follow up Board/Commission meetings

Thank you. In regard to the two other open items:

1) Would you provide the LDC Code (or relevant procedural code) section which addresses a Planning and Development Board "tie vote" and resulting decision.
2) Would you provide the Code reference(s) which indicates the situation(s)when the PDB may grant a second continuance for a variance request in an R/C district. (The only related section I identified is FC 3.07.03.B.3.)

Jackie O'Connell

336.512.9671 mobile
Excuse brevity and typos, sent from mobile device

> On Aug 18, 2025, at 8:07 AM, Sean S. Moylan <[redacted]flaglercounty.gov> wrote:
> Good morning,
> I verified your comments/emails were not made part of the record on appeal. I instructed staff that the entire record must be presented to the BCC on appeals.
>
>
> Sean S. Moylan
> Deputy County Attorney

> Board Certified City, County, and Local Government Law
> E: [redacted]flaglercounty.gov | V: 386-313-4056
>
> Flagler County Board of County Commissioners
> 1769 E. Moody Blvd., Bldg 2
> Bunnell, FL 32110
>
>
> -----Original Message-----
> From: Jackie OConnell <[redacted]yahoo.com>
> Sent: Sunday, August 17, 2025 2:02 PM
> To: Sean S. Moylan <[redacted]flaglercounty.gov>
> Subject: follow up Board/Commission meetings
>
> Hello Mr. Moylan,
> I appreciate the time you took to talk with me last Wednesday. There were a couple of items, relating to meetings on May 5 and Aug 12, that you were going to verify or research. Would you be able to provide an update (call or email) sometime on Monday, 8/18?
> Thanks,
> Jackie O'Connell
>
> 336.512.9671 mobile
> Excuse brevity and typos, sent from mobile device

Adam Mengel, AICP, LEED AP BD+C

From: Jackie OConnell <[redacted]yahoo.com>
Sent: Tuesday, August 26, 2025 12:23 PM
To: Sarah Spector
Cc: Adam Mengel, AICP, LEED AP BD+C; Sean S. Moylan
Subject: Re: follow up Board/Commission meetings

Thank you for the update. Is Mr. Royer aware that procedural questions were raised by me (using my name) or was a generic reason given (public inquiry, staff question, etc)? Also would you provide the portal access # for his new application?
Jackie
Please excuse typos! Sent from my iPhone

On Aug 26, 2025, at 9:50 AM, Sarah Spector <[redacted]flaglercounty.gov> wrote:

Good morning, Ms. O'Connell-

I apologize for the delay in responding to you. We were addressing your comments and concerns internally last week and can now report to you that Mr. Royer has submitted a new application. Thus, while we do not necessarily agree with the conclusions that you have drawn below, the procedural issues raised will no longer cloud the underlying issue of whether the variance criteria have been met.

The first stop for the new application will be the Technical Review Committee on September 17, 2025. From there it will be scheduled for hearing by the Planning and Development Board, likely in October but this will be decided at the TRC meeting.

Should you have any questions regarding the foregoing, please do not hesitate to reach out.

Sarah Spector
Assistant County Attorney

E: [redacted]flaglercounty.gov | V: 386-313-4058 | W: www.flaglercounty.gov

Flagler County Board of County Commissioners
1769 E. Moody Blvd., Bldg 2
Bunnell, FL 32110

<image002.png>

<image001.png>

<image003.png>

<image004.png>



The mission of Flagler County is to provide high-quality services through a responsive workforce committed to excellence, integrity, in collaboration with the cities and to act as a fiscally responsible steward.

From: Jackie OConnell <[redacted]yahoo.com>
Sent: Tuesday, August 19, 2025 3:43 PM
To: Sarah Spector <[redacted]flaglercounty.gov>
Cc: Adam Mengel, AICP, LEED AP BD+C <[redacted]flaglercounty.gov>; Sean S. Moylan <[redacted]flaglercounty.gov>
Subject: Re: follow up Board/Commission meetings

Hello Ms. Spector,

Your email came in while my husband and I were meeting w Ms. Kenny and Lademann. They have probably shared w you a bit more color around our inquiries.

Regarding a tie vote. As you confirmed, the LDC states that in case of quorum and tie-vote, the item fails. This was the situation at the Aug 12 meeting. There was a motion and vote to approve, resulting in a tie, and thus the decision of the Board was that the variance did not pass. The Acting Chair and another Board member stated it was appropriate to move to the next agenda item. The Board vote was not rescinded. Only after the "inquiry/guidance" from Staff did the invalid discussions, motion and vote to continue ensue.

Regarding continuance. The LDC states that only one continuance may be allowed. If your position is that more continuances may be granted in cases of tie vote, then an infinite number of continuances could be needed/granted; this is not documented in Code, nor is it reasonable. In the PDB meeting, Staff stated that there is a maximum of two ("just two") continuances allowed. Which code section (or precedence) states any circumstances that allows for more than one continuance?

Given the importance of timing in "decisions", we request these procedural errors be addressed as soon as possible, certainly within a week. Should the invalid continuance be perpetuated at Sept meeting, there is compounding of a procedural error, not to mention bias in favor of Applicant.

Jackie O'Connell

336.512.9671 mobile
Excuse brevity and typos, sent from mobile device

> On Aug 19, 2025, at 10:26 AM, Sarah Spector <[redacted]flaglercounty.gov> wrote:

Good morning, Ms. O'Connell-

As to your first question, Section 2.02.03(5) of the Land Development Code provides that each decision of the planning and development board must be approved by a majority vote of the members present at a meeting in which a quorum is in attendance and voting. In the absence of a majority vote, the item fails.

As to the second question, Section 3.07.03(B)(3) of the Land Development Code allows for one continuance due to lack of necessary info ("If the planning board determines that sufficient factual data was not presented, the planning board may continue the hearing until the next scheduled meeting to allow for the preparation of such factual data. Only one (1) such continuation shall be allowed for each requested variance and/or special exception."). However, there is nothing in the Code that prohibits an additional continuance for other reasons like, here, where the Board had an even number of members and wanted to wait to vote again when there would possibly be an odd number in attendance.

Sarah Spector
Assistant County Attorney

E: [redacted]flaglercounty.gov | V: 386-313-4058 | W: www.flaglercounty.gov

Flagler County Board of County Commissioners
1769 E. Moody Blvd., Bldg 2
Bunnell, FL 32110

<image002.png>

<image001.png> <image003.png>

<image004.png>

<image005.png>

The mission of Flagler County is to provide high-quality services through a responsive workforce committed to excellence, integrity, in collaboration with the cities and to act as a fiscally responsible steward.

-----Original Message-----
From: Jackie OConnell <[redacted]yahoo.com>
Sent: Monday, August 18, 2025 9:50 AM
To: Sean S. Moylan <[redacted]flaglercounty.gov>
Subject: Re: follow up Board/Commission meetings

Thank you. In regard to the two other open items:

1) Would you provide the LDC Code (or relevant procedural code) section which addresses a Planning and Development Board "tie vote" and resulting decision.
2) Would you provide the Code reference(s) which indicates the situation(s)when the PDB may grant a second continuance for a variance request in an R/C district. (The only related section I identified is FC 3.07.03.B.3.)

Jackie O'Connell

336.512.9671 mobile
Excuse brevity and typos, sent from mobile device

> On Aug 18, 2025, at 8:07 AM, Sean S. Moylan <[redacted]flaglercounty.gov> wrote:
> Good morning,
> I verified your comments/emails were not made part of the record on appeal. I instructed staff that the entire record must be presented to the BCC on appeals.
>
>
> Sean S. Moylan
> Deputy County Attorney
> Board Certified City, County, and Local Government Law
> E: [redacted]flaglercounty.gov | V: 386-313-4056
>
> Flagler County Board of County Commissioners
> 1769 E. Moody Blvd., Bldg 2
> Bunnell, FL 32110
>
>
> -----Original Message-----
> From: Jackie OConnell <[redacted]yahoo.com>
> Sent: Sunday, August 17, 2025 2:02 PM
> To: Sean S. Moylan <[redacted]flaglercounty.gov>
> Subject: follow up Board/Commission meetings
>
> Hello Mr. Moylan,
> I appreciate the time you took to talk with me last Wednesday. There were a couple of items, relating to meetings on May 5 and Aug 12, that you were going to verify or research. Would you be able to provide an update (call or email) sometime on Monday, 8/18?
> Thanks,
> Jackie O'Connell
>
> 336.512.9671 mobile
> Excuse brevity and typos, sent from mobile device

Adam Mengel, AICP, LEED AP BD+C

From: Jackie OConnell <[redacted]yahoo.com>
Sent: Wednesday, August 27, 2025 8:04 AM
To: Sarah Spector
Cc: Adam Mengel, AICP, LEED AP BD+C; Sean S. Moylan
Subject: Re: follow up Board/Commission meetings

Surely there could have been a more objective way, without my name or inference, to address this w Mr Royer and, if not too late, with PDB.

How was, or will, my inquiries be conveyed to the Chair/Vice, and rest of members?
What will August draft minutes reflect as outcome? A decision "rendered"?

Regarding the reapplication, which procedures (vote, # of continuances, etc.) will be followed?

Not being argumentative, I simply need to know to whom and how I've been identified and which rules apply.

Thank you, Jackie

336.512.9671 mobile
Excuse brevity and typos, sent from mobile device

> On Aug 26, 2025, at 4:31 PM, Sarah Spector <[redacted]flaglercounty.gov> wrote:
>
> The new AR # is 5921.
>
> I cannot state with certainty whether you were referred to by name, but I do know that Mr. Royer was aware of the inquiry you made.
>
> ---
>
> **From:** Jackie OConnell <[redacted]yahoo.com>
> **Sent:** Tuesday, August 26, 2025 12:23 PM
> **To:** Sarah Spector <[redacted]flaglercounty.gov>
> **Cc:** Adam Mengel, AICP, LEED AP BD+C <[redacted]flaglercounty.gov>; Sean S. Moylan <[redacted]flaglercounty.gov>
> **Subject:** Re: follow up Board/Commission meetings
>
> Thank you for the update. Is Mr. Royer aware that procedural questions were raised by me (using my name) or was a generic reason given (public inquiry, staff question, etc)? Also would you provide the portal access # for his new application?
> Jackie
> Please excuse typos! Sent from my iPhone

On Aug 26, 2025, at 9:50 AM, Sarah Spector <[redacted]flaglercounty.gov> wrote:

Good morning, Ms. O'Connell-

I apologize for the delay in responding to you. We were addressing your comments and concerns internally last week and can now report to you that Mr. Royer has submitted a new application. Thus, while we do not necessarily agree with the conclusions that you have drawn below, the procedural issues raised will no longer cloud the underlying issue of whether the variance criteria have been met.

The first stop for the new application will be the Technical Review Committee on September 17, 2025. From there it will be scheduled for hearing by the Planning and Development Board, likely in October but this will be decided at the TRC meeting.

Should you have any questions regarding the foregoing, please do not hesitate to reach out.

Sarah Spector
Assistant County Attorney

E: [redacted]flaglercounty.gov | V: 386-313-4058 | W: www.flaglercounty.gov

Flagler County Board of County Commissioners
1769 E. Moody Blvd., Bldg 2
Bunnell, FL 32110









The mission of Flagler County is to provide high-quality services through a responsive workforce committed to excellence, integrity, in collaboration with the cities and to act as a fiscally responsible steward.

From: Jackie OConnell <[redacted]yahoo.com>
Sent: Tuesday, August 19, 2025 3:43 PM
To: Sarah Spector <[redacted]flaglercounty.gov>
Cc: Adam Mengel, AICP, LEED AP BD+C <[redacted]flaglercounty.gov>; Sean S. Moylan

<[redacted]flaglercounty.gov>
Subject: Re: follow up Board/Commission meetings

Hello Ms. Spector,

Your email came in while my husband and I were meeting w Ms. Kenny and Lademann. They have probably shared w you a bit more color around our inquiries.

Regarding a tie vote. As you confirmed, the LDC states that in case of quorum and tie-vote, the item fails. This was the situation at the Aug 12 meeting. There was a motion and vote to approve, resulting in a tie, and thus the decision of the Board was that the variance did not pass. The Acting Chair and another Board member stated it was appropriate to move to the next agenda item. The Board vote was not rescinded. Only after the "inquiry/guidance" from Staff did the invalid discussions, motion and vote to continue ensue.

Regarding continuance. The LDC states that only one continuance may be allowed. If your position is that more continuances may be granted in cases of tie vote, then an infinite number of continuances could be needed/granted; this is not documented in Code, nor is it reasonable. In the PDB meeting, Staff stated that there is a maximum of two ("just two") continuances allowed. Which code section (or precedence) states any circumstances that allows for more than one continuance?

Given the importance of timing in "decisions", we request these procedural errors be addressed as soon as possible, certainly within a week. Should the invalid continuance be perpetuated at Sept meeting, there is compounding of a procedural error, not to mention bias in favor of Applicant.

Jackie O'Connell

336.512.9671 mobile
Excuse brevity and typos, sent from mobile device

> On Aug 19, 2025, at 10:26 AM, Sarah Spector <[redacted]flaglercounty.gov> wrote:
>
> Good morning, Ms. O'Connell-
>
> As to your first question, Section 2.02.03(5) of the Land Development Code provides that each decision of the planning and development board must be approved by a majority vote of the members present at a

meeting in which a quorum is in attendance and voting. In the absence of a majority vote, the item fails.

As to the second question, Section 3.07.03(B)(3) of the Land Development Code allows for one continuance due to lack of necessary info ("If the planning board determines that sufficient factual data was not presented, the planning board may continue the hearing until the next scheduled meeting to allow for the preparation of such factual data. Only one (1) such continuation shall be allowed for each requested variance and/or special exception."). However, there is nothing in the Code that prohibits an additional continuance for other reasons like, here, where the Board had an even number of members and wanted to wait to vote again when there would possibly be an odd number in attendance.

Sarah Spector
Assistant County Attorney

E: [redacted]flaglercounty.gov | V: 386-313-4058 | W: www.flaglercounty.gov

Flagler County Board of County Commissioners
1769 E. Moody Blvd., Bldg 2
Bunnell, FL 32110

The mission of Flagler County is to provide high-quality services through a responsive workforce committed to excellence, integrity, in collaboration with the cities and to act as a fiscally responsible steward.

-----Original Message-----
From: Jackie OConnell <[redacted]yahoo.com>
Sent: Monday, August 18, 2025 9:50 AM
To: Sean S. Moylan <[redacted]flaglercounty.gov>
Subject: Re: follow up Board/Commission meetings

Thank you. In regard to the two other open items:

1) Would you provide the LDC Code (or relevant procedural code) section which addresses a Planning and Development Board "tie vote" and resulting decision.
2) Would you provide the Code reference(s) which indicates the situation(s)when the PDB may grant a second continuance for a variance request in an R/C district. (The only related section I identified is FC 3.07.03.B.3.)

Jackie O'Connell

336.512.9671 mobile
Excuse brevity and typos, sent from mobile device

> On Aug 18, 2025, at 8:07 AM, Sean S. Moylan
<[redacted]flaglercounty.gov> wrote:
> Good morning,
> I verified your comments/emails were not made part of the record on appeal. I instructed staff that the entire record must be presented to the BCC on appeals.
>
>
> Sean S. Moylan
> Deputy County Attorney
> Board Certified City, County, and Local Government Law
> E: [redacted]flaglercounty.gov | V: 386-313-4056
>
> Flagler County Board of County Commissioners
> 1769 E. Moody Blvd., Bldg 2
> Bunnell, FL 32110
>
>
> -----Original Message-----
> From: Jackie OConnell <[redacted]yahoo.com>
> Sent: Sunday, August 17, 2025 2:02 PM
> To: Sean S. Moylan <[redacted]flaglercounty.gov>
> Subject: follow up Board/Commission meetings
>
> Hello Mr. Moylan,
> I appreciate the time you took to talk with me last Wednesday. There were a couple of items, relating to meetings on May 5 and Aug 12, that you were going to verify or research. Would you be able to provide an update (call or email) sometime on Monday, 8/18?
> Thanks,
> Jackie O'Connell
>
> 336.512.9671 mobile
> Excuse brevity and typos, sent from mobile device

Adam Mengel, AICP, LEED AP BD+C

From: Jackie OConnell <[redacted]yahoo.com>
Sent: Friday, August 29, 2025 3:43 PM
To: Sarah Spector; Simone Kenny, AICP
Cc: Adam Mengel, AICP, LEED AP BD+C; Sean S. Moylan; Planning Dept
Subject: Re: follow up Board meetings DATE??

Which date is correct??
Below is the email from Ms Spector which indicates PDB no earlier than October.
My neighbor just received notice that Royer variance is on Planning Board's agenda for September 9. Won't he need to go to TRC before Board?
Pls confirm the PDB date asap (don't wait until Sept 2) so I can try to reschedule my plans, again.
Jackie O'Connell

Please excuse typos! Sent from my iPhone

> On Aug 26, 2025, at 9:50 AM, Sarah Spector <[redacted]flaglercounty.gov> wrote:
>
> Good morning, Ms. O'Connell-
>
> I apologize for the delay in responding to you. We were addressing your comments and concerns internally last week and can now report to you that Mr. Royer has submitted a new application. Thus, while we do not necessarily agree with the conclusions that you have drawn below, the procedural issues raised will no longer cloud the underlying issue of whether the variance criteria have been met.
>
> The first stop for the new application will be the Technical Review Committee on September 17, 2025. From there it will be scheduled for hearing by the Planning and Development Board, likely in October but this will be decided at the TRC meeting.
>
> Should you have any questions regarding the foregoing, please do not hesitate to reach out.
>
> **Sarah Spector**
> Assistant County Attorney
>
> E: [redacted]flaglercounty.gov | V: 386-313-4058 | W: www.flaglercounty.gov

Flagler County Board of County Commissioners
1769 E. Moody Blvd., Bldg 2
Bunnell, FL 32110

The mission of Flagler County is to provide high-quality services through a responsive workforce committed to excellence, integrity, in collaboration with the cities and to act as a fiscally responsible steward.

From: Jackie OConnell <[redacted]yahoo.com>
Sent: Tuesday, August 19, 2025 3:43 PM
To: Sarah Spector <[redacted]flaglercounty.gov>
Cc: Adam Mengel, AICP, LEED AP BD+C <[redacted]flaglercounty.gov>; Sean S. Moylan <[redacted]flaglercounty.gov>
Subject: Re: follow up Board/Commission meetings

Hello Ms. Spector,

Your email came in while my husband and I were meeting w Ms. Kenny and Lademann. They have probably shared w you a bit more color around our inquiries.

Regarding a tie vote. As you confirmed, the LDC states that in case of quorum and tie-vote, the item fails. This was the situation at the Aug 12 meeting. There was a motion and vote to approve, resulting in a tie, and thus the decision of the Board was that the variance did not pass. The Acting Chair and another Board member stated it was appropriate to move to the next agenda item. The Board vote was not rescinded. Only after the "inquiry/guidance" from Staff did the invalid discussions, motion and vote to continue ensue.

Regarding continuance. The LDC states that only one continuance may be allowed. If your position is that more continuances may be granted in cases of tie vote, then an infinite number of continuances could be needed/granted; this is not documented in Code, nor is it reasonable. In the PDB meeting, Staff stated that there is a maximum of two ("just two") continuances allowed. Which code section (or precedence) states any circumstances that allows for more than one continuance?

Given the importance of timing in "decisions", we request these procedural errors be addressed as soon as possible, certainly within a week. Should the invalid continuance be perpetuated at Sept meeting, there is compounding of a procedural error, not to mention bias in favor of Applicant.

Jackie O'Connell

336.512.9671 mobile
Excuse brevity and typos, sent from mobile device

On Aug 19, 2025, at 10:26 AM, Sarah Spector <[redacted]flaglercounty.gov> wrote:

Good morning, Ms. O'Connell-

As to your first question, Section 2.02.03(5) of the Land Development Code provides that each decision of the planning and development board must be approved by a majority vote of the members present at a meeting in which a quorum is in attendance and voting. In the absence of a majority vote, the item fails.

As to the second question, Section 3.07.03(B)(3) of the Land Development Code allows for one continuance due to lack of necessary info ("If the planning board determines that sufficient factual data was not presented, the planning board may continue the hearing until the next scheduled meeting to allow for the preparation of such factual data. Only one (1) such continuation shall be allowed for each requested variance and/or special exception."). However, there is nothing in the Code that prohibits an additional continuance for other reasons like, here, where the Board had an even number of members and wanted to wait to vote again when there would possibly be an odd number in attendance.

Sarah Spector
Assistant County Attorney

E: [redacted]flaglercounty.gov | V: 386-313-4058 | W: www.flaglercounty.gov

Flagler County Board of County Commissioners
1769 E. Moody Blvd., Bldg 2
Bunnell, FL 32110

<image002.png>

<image001.png>

<image003.png>

<image004.png>

<image005.png>

The mission of Flagler County is to provide high-quality services through a responsive workforce committed to excellence, integrity, in collaboration with the cities and to act as a fiscally responsible steward.

-----Original Message-----
From: Jackie OConnell <[redacted]yahoo.com>
Sent: Monday, August 18, 2025 9:50 AM
To: Sean S. Moylan <[redacted]flaglercounty.gov>
Subject: Re: follow up Board/Commission meetings

Thank you. In regard to the two other open items:

1) Would you provide the LDC Code (or relevant procedural code) section which addresses a Planning and Development Board "tie vote" and resulting decision.
2) Would you provide the Code reference(s) which indicates the situation(s)when the PDB may grant a second continuance for a variance request in an R/C district. (The only related section I identified is FC 3.07.03.B.3.)

Jackie O'Connell

336.512.9671 mobile
Excuse brevity and typos, sent from mobile device

> On Aug 18, 2025, at 8:07 AM, Sean S. Moylan <[redacted]flaglercounty.gov> wrote:
> Good morning,
> I verified your comments/emails were not made part of the record on appeal. I instructed staff that the entire record must be presented to the BCC on appeals.
>
>
> Sean S. Moylan
> Deputy County Attorney
> Board Certified City, County, and Local Government Law
> E: [redacted]flaglercounty.gov | V: 386-313-4056
>
> Flagler County Board of County Commissioners
> 1769 E. Moody Blvd., Bldg 2
> Bunnell, FL 32110
>
>
> -----Original Message-----
> From: Jackie OConnell <[redacted]yahoo.com>
> Sent: Sunday, August 17, 2025 2:02 PM
> To: Sean S. Moylan <[redacted]flaglercounty.gov>
> Subject: follow up Board/Commission meetings
>
> Hello Mr. Moylan,
> I appreciate the time you took to talk with me last Wednesday. There were a couple of items, relating to meetings on May 5 and Aug 12, that you were going to verify or research. Would you be able to provide an update (call or email) sometime on Monday, 8/18?
> Thanks,
> Jackie O'Connell
>
> 336.512.9671 mobile
> Excuse brevity and typos, sent from mobile device

Adam Mengel, AICP, LEED AP BD+C

From: Jackie OConnell <[redacted]yahoo.com>
Sent: Friday, August 29, 2025 4:20 PM
To: Adam Mengel, AICP, LEED AP BD+C
Cc: Sean S. Moylan; Planning Dept; Sarah Spector; Simone Kenny, AICP
Subject: Re: follow up Board meetings DATE??

Wouldn't Mr Royer need to post sign for 30 days prior to meeting?

Please excuse typos! Sent from my iPhone

On Aug 29, 2025, at 3:56 PM, Adam Mengel, AICP, LEED AP BD+C <[redacted]flaglercounty.gov> wrote:

Hi Ms. O'Connell:

The Planning and Development Board meeting scheduled for Tuesday, September 9, 2025 is correct, and Mr. Royer's variance application will be part of this meeting's agenda. Ms. Spector provided her email reply to you before we had reviewed Mr. Royer's application. His application has not materially changed since his previous application that was reviewed by the Technical Review Committee: there would be nothing more for the Committee to review on his new application.

The public notice has now been provided for the September 9, 2025 Planning and Development Board meeting. Ms. Spector's email is not the Board's public notice.

I hope that this information is helpful and please contact us with any questions.

Thank you,

Adam

Adam Mengel, AICP, LEED AP BD+C
Growth Management Director

E: [redacted]flaglercounty.gov | V: 386-313-4065 | W: www.flaglercounty.gov

Flagler County Board of County Commissioners
1769 E. Moody Blvd., Bldg 2
Bunnell, FL 32110

<image001.png>

<image002.png>

<image003.png>





The mission of Flagler County is to provide high-quality services through a responsive workforce committed to excellence, integrity, in collaboration with the cities and to act as a fiscally responsible steward.

From: Jackie OConnell <[redacted]yahoo.com>
Sent: Friday, August 29, 2025 3:43 PM
To: Sarah Spector <[redacted]flaglercounty.gov>; Simone Kenny, AICP <[redacted]flaglercounty.gov>
Cc: Adam Mengel, AICP, LEED AP BD+C <[redacted]flaglercounty.gov>; Sean S. Moylan <[redacted]flaglercounty.gov>; Planning Dept <[redacted]flaglercounty.gov>
Subject: Re: follow up Board meetings DATE??

Which date is correct??
Below is the email from Ms Spector which indicates PDB no earlier than October.
My neighbor just received notice that Royer variance is on Planning Board's agenda for September 9. Won't he need to go to TRC before Board?
Pls confirm the PDB date asap (don't wait until Sept 2) so I can try to reschedule my plans, again.
Jackie O'Connell

Please excuse typos! Sent from my iPhone

> On Aug 26, 2025, at 9:50 AM, Sarah Spector <[redacted]flaglercounty.gov> wrote:
>
> Good morning, Ms. O'Connell-
>
> I apologize for the delay in responding to you. We were addressing your comments and concerns internally last week and can now report to you that Mr. Royer has submitted a new application. Thus, while we do not necessarily agree with the conclusions that you have drawn below, the procedural issues raised will no longer cloud the underlying issue of whether the variance criteria have been met.
>
> The first stop for the new application will be the Technical Review Committee on September 17, 2025. From there it will be scheduled for hearing by the Planning and Development Board, likely in October but this will be decided at the TRC meeting.

Should you have any questions regarding the foregoing, please do not hesitate to reach out.

Sarah Spector
Assistant County Attorney

E: [redacted]flaglercounty.gov | V: 386-313-4058 | W: www.flaglercounty.gov

Flagler County Board of County Commissioners
1769 E. Moody Blvd., Bldg 2
Bunnell, FL 32110

<image002.png>

<image001.png> <image003.png>

<image004.png>

<image005.png>

The mission of Flagler County is to provide high-quality services through a responsive workforce committed to excellence, integrity, in collaboration with the cities and to act as a fiscally responsible steward.

From: Jackie OConnell <[redacted]yahoo.com>
Sent: Tuesday, August 19, 2025 3:43 PM
To: Sarah Spector <[redacted]flaglercounty.gov>
Cc: Adam Mengel, AICP, LEED AP BD+C <[redacted]flaglercounty.gov>; Sean S. Moylan <[redacted]flaglercounty.gov>
Subject: Re: follow up Board/Commission meetings

Hello Ms. Spector,

Your email came in while my husband and I were meeting w Ms. Kenny and Lademann. They have probably shared w you a bit more color around our inquiries.

Regarding a tie vote. As you confirmed, the LDC states that in case of quorum and tie-vote, the item fails. This was the situation at the Aug 12 meeting. There was a motion and vote to approve, resulting in a tie, and thus the decision of the Board was that the variance did not pass. The Acting Chair and another Board member stated it was appropriate to move to the next agenda item. The Board vote was not rescinded. Only after the "inquiry/guidance" from Staff did the invalid discussions, motion and vote to continue ensue.

Regarding continuance. The LDC states that only one continuance may be allowed. If your position is that more continuances may be granted in cases

of tie vote, then an infinite number of continuances could be needed/granted; this is not documented in Code, nor is it reasonable. In the PDB meeting, Staff stated that there is a maximum of two ("just two") continuances allowed. Which code section (or precedence) states any circumstances that allows for more than one continuance?

Given the importance of timing in "decisions", we request these procedural errors be addressed as soon as possible, certainly within a week. Should the invalid continuance be perpetuated at Sept meeting, there is compounding of a procedural error, not to mention bias in favor of Applicant.

Jackie O'Connell

336.512.9671 mobile
Excuse brevity and typos, sent from mobile device

On Aug 19, 2025, at 10:26 AM, Sarah Spector <[redacted]flaglercounty.gov> wrote:

Good morning, Ms. O'Connell-

As to your first question, Section 2.02.03(5) of the Land Development Code provides that each decision of the planning and development board must be approved by a majority vote of the members present at a meeting in which a quorum is in attendance and voting. In the absence of a majority vote, the item fails.

As to the second question, Section 3.07.03(B)(3) of the Land Development Code allows for one continuance due to lack of necessary info ("If the planning board determines that sufficient factual data was not presented, the planning board may continue the hearing until the next scheduled meeting to allow for the preparation of such factual data. Only one (1) such continuation shall be allowed for each requested variance and/or special exception."). However, there is nothing in the Code that prohibits an additional continuance for other reasons like, here, where the Board had an even number of members and wanted to wait to vote again when there would possibly be an odd number in attendance.

Sarah Spector
Assistant County Attorney

E: [redacted]flaglercounty.gov | V: 386-313-4058 | W: www.flaglercounty.gov

Flagler County Board of County Commissioners
1769 E. Moody Blvd., Bldg 2
Bunnell, FL 32110

<image002.png>

<image001.png>

<image003.png>

<image004.png>

<image005.png>

The mission of Flagler County is to provide high-quality services through a responsive workforce committed to excellence, integrity, in collaboration with the cities and to act as a fiscally responsible steward.

-----Original Message-----
From: Jackie OConnell <[redacted]yahoo.com>
Sent: Monday, August 18, 2025 9:50 AM
To: Sean S. Moylan <[redacted]flaglercounty.gov>
Subject: Re: follow up Board/Commission meetings

Thank you. In regard to the two other open items:

1) Would you provide the LDC Code (or relevant procedural code) section which addresses a Planning and Development Board "tie vote" and resulting decision.
2) Would you provide the Code reference(s) which indicates the situation(s)when the PDB may grant a second continuance for a variance request in an R/C district. (The only related section I identified is FC 3.07.03.B.3.)

Jackie O'Connell

336.512.9671 mobile
Excuse brevity and typos, sent from mobile device

> On Aug 18, 2025, at 8:07 AM, Sean S. Moylan
<[redacted]flaglercounty.gov> wrote:
> Good morning,
> I verified your comments/emails were not made part of the record on appeal. I instructed staff that the entire record must be presented to the BCC on appeals.
>
>
> Sean S. Moylan
> Deputy County Attorney
> Board Certified City, County, and Local Government Law
> E: [redacted]flaglercounty.gov | V: 386-313-4056
>
> Flagler County Board of County Commissioners
> 1769 E. Moody Blvd., Bldg 2

> Bunnell, FL 32110
>
>
> -----Original Message-----
> From: Jackie OConnell <[redacted]yahoo.com>
> Sent: Sunday, August 17, 2025 2:02 PM
> To: Sean S. Moylan <[redacted]flaglercounty.gov>
> Subject: follow up Board/Commission meetings
>
> Hello Mr. Moylan,
> I appreciate the time you took to talk with me last Wednesday. There were a couple of items, relating to meetings on May 5 and Aug 12, that you were going to verify or research. Would you be able to provide an update (call or email) sometime on Monday, 8/18?
> Thanks,
> Jackie O'Connell
>
> 336.512.9671 mobile
> Excuse brevity and typos, sent from mobile device

Adam Mengel, AICP, LEED AP BD+C

From: Jackie OConnell <[redacted]yahoo.com>
Sent: Tuesday, September 2, 2025 3:35 PM
To: Sarah Spector
Cc: Adam Mengel, AICP, LEED AP BD+C; Sean S. Moylan; Simone Kenny, AICP
Subject: Re: follow up Board meetings DATE??

I left a voicemail message last Friday (Aug 29) to clarify meeting dates, before receiving Mr. Mengel's email later that day.

Mr. Royer's application is dated Friday, August 22

Public notice letter is dated and postmarked (Monday), August 25. Staff review of Mr. Royer's application, decision to waive TRC and schedule for Sept PDB meeting must have been made before or on that day.

Effectively, Mr. Royer got another continuance.

Your email of August 26 noted a TRC meeting in September, followed by PDB meeting likely in October.

In any case, I understand that the PDB meeting is September 9.

Thank you.

Please excuse typos! Sent from my iPhone

> On Sep 2, 2025, at 1:45 PM, Sarah Spector <[redacted]flaglercounty.gov> wrote:
>
> Ms. O'Connell-
>
> I was out of the office as of last Wednesday afternoon, but I was following email traffic. Because the email from Mr. Mengel went out at the end of the day on Friday, I did not realize until I received your voicemail today that you still had a question regarding the TRC hearing date on Mr. Royer's new application.
>
> As Mr. Mengel mentioned in his email below, my August 26 email was sent in the brief period of time after Mr. Royer submitted his application but before it had been reviewed by staff. Once it was determined that TRC review was not needed, notice was provided as required for the September 9 Planning and Development Board meeting.
>
> Mr. Royer's application will be heard by the Planning and Development Board on September 9, 2025.
>
> **Sarah Spector**
> Assistant County Attorney

E: [redacted]flaglercounty.gov | V: 386-313-4058 | W: www.flaglercounty.gov

Flagler County Board of County Commissioners
1769 E. Moody Blvd., Bldg 2
Bunnell, FL 32110







The mission of Flagler County is to provide high-quality services through a responsive workforce committed to excellence, integrity, in collaboration with the cities and to act as a fiscally responsible steward.

From: Adam Mengel, AICP, LEED AP BD+C <[redacted]flaglercounty.gov>
Sent: Friday, August 29, 2025 4:34 PM
To: Jackie OConnell <[redacted]yahoo.com>
Cc: Sean S. Moylan <[redacted]flaglercounty.gov>; Planning Dept <[redacted]flaglercounty.gov>; Sarah Spector <[redacted]flaglercounty.gov>; Simone Kenny, AICP <[redacted]flaglercounty.gov>
Subject: RE: follow up Board meetings DATE??

No, it is 14 days, and the signs are posted by County staff.

From: Jackie OConnell <[redacted]yahoo.com>
Sent: Friday, August 29, 2025 4:20 PM
To: Adam Mengel, AICP, LEED AP BD+C <[redacted]flaglercounty.gov>
Cc: Sean S. Moylan <[redacted]flaglercounty.gov>; Planning Dept <[redacted]flaglercounty.gov>; Sarah Spector <[redacted]flaglercounty.gov>; Simone Kenny, AICP <[redacted]flaglercounty.gov>
Subject: Re: follow up Board meetings DATE??

Wouldn't Mr Royer need to post sign for 30 days prior to meeting?

Please excuse typos! Sent from my iPhone

> On Aug 29, 2025, at 3:56 PM, Adam Mengel, AICP, LEED AP BD+C <[redacted]flaglercounty.gov> wrote:
>
> Hi Ms. O'Connell:
>
> The Planning and Development Board meeting scheduled for Tuesday, September 9, 2025 is correct, and Mr. Royer's variance application will be part of this meeting's agenda. Ms. Spector provided her email reply to you before we had reviewed Mr. Royer's application. His application has not materially changed since his previous application that was reviewed by the Technical Review Committee: there would be nothing more for the Committee to review on his new application.

The public notice has now been provided for the September 9, 2025 Planning and Development Board meeting. Ms. Spector's email is not the Board's public notice.

I hope that this information is helpful and please contact us with any questions.

Thank you,

Adam

Adam Mengel, AICP, LEED AP BD+C
Growth Management Director

E: [redacted]flaglercounty.gov | V: 386-313-4065 | W: www.flaglercounty.gov

Flagler County Board of County Commissioners
1769 E. Moody Blvd., Bldg 2
Bunnell, FL 32110

<image002.png>

<image001.png>

<image003.png>

<image004.png>

<image005.png>

The mission of Flagler County is to provide high-quality services through a responsive workforce committed to excellence, integrity, in collaboration with the cities and to act as a fiscally responsible steward.

From: Jackie OConnell <[redacted]yahoo.com>
Sent: Friday, August 29, 2025 3:43 PM
To: Sarah Spector <[redacted]flaglercounty.gov>; Simone Kenny, AICP <[redacted]flaglercounty.gov>
Cc: Adam Mengel, AICP, LEED AP BD+C <[redacted]flaglercounty.gov>; Sean S. Moylan <[redacted]flaglercounty.gov>; Planning Dept <[redacted]flaglercounty.gov>
Subject: Re: follow up Board meetings DATE??

Which date is correct??
Below is the email from Ms Spector which indicates PDB no earlier than October.
My neighbor just received notice that Royer variance is on Planning Board's agenda for September 9. Won't he need to go to TRC before Board?
Pls confirm the PDB date asap (don't wait until Sept 2) so I can try to reschedule my plans, again.
Jackie O'Connell

Please excuse typos! Sent from my iPhone

On Aug 26, 2025, at 9:50 AM, Sarah Spector <[redacted]flaglercounty.gov> wrote:

Good morning, Ms. O'Connell-

I apologize for the delay in responding to you. We were addressing your comments and concerns internally last week and can now report to you that Mr. Royer has submitted a new application. Thus, while we do not necessarily agree with the conclusions that you have drawn below, the procedural issues raised will no longer cloud the underlying issue of whether the variance criteria have been met.

The first stop for the new application will be the Technical Review Committee on September 17, 2025. From there it will be scheduled for hearing by the Planning and Development Board, likely in October but this will be decided at the TRC meeting.

Should you have any questions regarding the foregoing, please do not hesitate to reach out.

Sarah Spector
Assistant County Attorney

E: [redacted]flaglercounty.gov | V: 386-313-4058 | W: www.flaglercounty.gov

Flagler County Board of County Commissioners
1769 E. Moody Blvd., Bldg 2
Bunnell, FL 32110

<image002.png>
<image001.png>
<image003.png>
<image004.png>
<image005.png>

The mission of Flagler County is to provide high-quality services through a responsive workforce committed to excellence, integrity, in collaboration with the cities and to act as a fiscally responsible steward.

From: Jackie OConnell <[redacted]yahoo.com>
Sent: Tuesday, August 19, 2025 3:43 PM
To: Sarah Spector <[redacted]flaglercounty.gov>
Cc: Adam Mengel, AICP, LEED AP BD+C <[redacted]flaglercounty.gov>; Sean S. Moylan <[redacted]flaglercounty.gov>
Subject: Re: follow up Board/Commission meetings

Hello Ms. Spector,

Your email came in while my husband and I were meeting w Ms. Kenny and Lademann. They have probably shared w you a bit more color around our inquiries.

Regarding a tie vote. As you confirmed, the LDC states that in case of quorum and tie-vote, the item fails. This was the situation at the Aug 12 meeting. There was a motion and vote to approve, resulting in a tie, and thus the decision of the Board was that the variance did not pass. The Acting Chair and another Board member stated it was appropriate to move to the next agenda item. The Board vote was not rescinded. Only after the "inquiry/guidance" from Staff did the invalid discussions, motion and vote to continue ensue.

Regarding continuance. The LDC states that only one continuance may be allowed. If your position is that more continuances may be granted in cases of tie vote, then an infinite number of continuances could be needed/granted; this is not documented in Code, nor is it reasonable. In the PDB meeting, Staff stated that there is a maximum of two ("just two") continuances allowed. Which code section (or precedence) states any circumstances that allows for more than one continuance?

Given the importance of timing in "decisions", we request these procedural errors be addressed as soon as possible, certainly within a week. Should the invalid continuance be perpetuated at Sept meeting, there is compounding of a procedural error, not to mention bias in favor of Applicant.

Jackie O'Connell

336.512.9671 mobile
Excuse brevity and typos, sent from mobile device

On Aug 19, 2025, at 10:26 AM, Sarah Spector <[redacted]flaglercounty.gov> wrote:

Good morning, Ms. O'Connell-

As to your first question, Section 2.02.03(5) of the Land Development Code provides that each decision of the planning and development board must be approved by a majority vote of the members present at a meeting in which a quorum is in attendance and voting. In the absence of a majority vote, the item fails.

As to the second question, Section 3.07.03(B)(3) of the Land Development Code allows for one continuance due to lack of necessary info ("If the planning board determines that sufficient factual data was not presented, the planning board may continue the hearing until the next scheduled meeting to allow for the preparation of such factual data. Only one (1) such continuation shall be allowed for each requested variance and/or special exception."). However, there is nothing in the Code that prohibits an additional continuance for other reasons like, here, where the Board had an even number of members and wanted to wait to vote again when there would possibly be an odd number in attendance.

Sarah Spector
Assistant County Attorney

E: [redacted]flaglercounty.gov | V: 386-313-4058 | W: www.flaglercounty.gov

Flagler County Board of County Commissioners
1769 E. Moody Blvd., Bldg 2
Bunnell, FL 32110

<image002.png>

<image001.png>

<image003.png>

<image004.png>

<image005.png>

The mission of Flagler County is to provide high-quality services through a responsive workforce committed to excellence, integrity, in

collaboration with the cities and to act as a fiscally responsible steward.

-----Original Message-----
From: Jackie OConnell <[redacted]yahoo.com>
Sent: Monday, August 18, 2025 9:50 AM
To: Sean S. Moylan <[redacted]flaglercounty.gov>
Subject: Re: follow up Board/Commission meetings

Thank you. In regard to the two other open items:

1) Would you provide the LDC Code (or relevant procedural code) section which addresses a Planning and Development Board "tie vote" and resulting decision.
2) Would you provide the Code reference(s) which indicates the situation(s)when the PDB may grant a second continuance for a variance request in an R/C district. (The only related section I identified is FC 3.07.03.B.3.)

Jackie O'Connell

336.512.9671 mobile
Excuse brevity and typos, sent from mobile device

> On Aug 18, 2025, at 8:07 AM, Sean S. Moylan <[redacted]flaglercounty.gov> wrote:
> Good morning,
> I verified your comments/emails were not made part of the record on appeal. I instructed staff that the entire record must be presented to the BCC on appeals.
>
>
> Sean S. Moylan
> Deputy County Attorney
> Board Certified City, County, and Local Government Law
> E: [redacted]flaglercounty.gov | V: 386-313-4056
>
> Flagler County Board of County Commissioners
> 1769 E. Moody Blvd., Bldg 2
> Bunnell, FL 32110
>
>
> -----Original Message-----
> From: Jackie OConnell <[redacted]yahoo.com>
> Sent: Sunday, August 17, 2025 2:02 PM
> To: Sean S. Moylan <[redacted]flaglercounty.gov>
> Subject: follow up Board/Commission meetings
>
> Hello Mr. Moylan,

> I appreciate the time you took to talk with me last Wednesday. There were a couple of items, relating to meetings on May 5 and Aug 12, that you were going to verify or research. Would you be able to provide an update (call or email) sometime on Monday, 8/18?
> Thanks,
> Jackie O'Connell
>
> 336.512.9671 mobile
> Excuse brevity and typos, sent from mobile device

Adam Mengel, AICP, LEED AP BD+C

From: Jackie OConnell <[redacted]yahoo.com>
Sent: Friday, September 5, 2025 8:52 AM
To: Simone Kenny, AICP; Planning Dept
Subject: Information for PDB package re 3 Pelican
Attachments: Fact Checker 3 Pelican variance.pptx

Hello Simone and Planning Team,

Attached is a file of 9 slides for inclusion in the PDB's packet re 3 Pelican variance request. There is a one-page summary of pertinent statements/assertions, compared to "facts", followed by 8 supporting documents.

If you have any issues accessing the file, don't hesitate to call me.

Kindly
confirm receipt and thank you,

Jackie O'Connell
Mockingbird Ln

Applicant - 3 Pelican Lane	Fact-checking
Pumps are "special", "unique" [from Germany] and need more space than standard pumps. (all meetings)	Badu manufacturer tech data: "**compact system", 4'H more than sufficient** for pumps and cover.
	Public submitted data at August meeting. See Slides 1-2
Does not want to place pump house on back *[NW]* corner of house because it is made of plywood. (Jan, Feb, May, July)	Flagler Co Property Appraiser website shows house **footprint as concrete/stucco with masonry** frame. No back porch is indicated.
	Public submitted data at February meeting. Slides 3-4
Pump house needed for **pumps "90% of the time**, 10% of the time needed for outdoor furniture storage" (July)	**Minimum relief** with condition of 4' height for pump house/cover was **granted**.
Pump house has **grown from 72 sf** (Feb) **to 96 sf** (July, Sept)	The pump house is essentially the size of a **house addition, proposed within 2 1/2 feet of property line, street side**. Non-conforming with neighborhood character or safe sightlines.
"Runoff issues have been settled with County Attorney" (Aug)	**Mr. Moylan did not** indicate that he **concurred** with this statement.
	Existing downspouts extend beyond Royer **property. No plan for excess lot coverage.** Public submitted **photo at February meeting. Slide 5**
"Restrictive covenants require 4' [*maximum]* on property line for fences/walls." (May, Aug)	**Correct. Public submitted recorded data at January meeting. Slide 6**
If road was properly platted, the road/ROW would be much closer to my property line [*than existing pavement]* . (Aug)	Correct. **Renderings not drawn to scale or reality**. Street/pool setback required 25'. Variance of 22.34' due to **oversized pump house. Slide 7**



Slide 1

Badu Jet Stream II pump system, per Speck Pumps (German manufacturer)

Height less than 4’

Badu Jet Stream Package D system (per Applicant's youtube link)

Slide 2

Safe Search | Flagler County | Politics Chat, | qPublic.net - | Public Comm | Microsoft Out | Microsoft Out | Microsoft Out | Badu Stream

File file:///C:/Users/Jackie/OneDrive/Flagler/Final%20Variance%20%232%20presentation/Badu%20Stream%20plumbing%20photo.pdf

Badu Stream plumbing photo.pdf 1 / 1 75%



1

Plumbing installation for the BaduStream ***Package D (system include three jet housings & two pumps)***

NOTE: ***(Three Jet Installation)*** *Increase the pipe size to 6" when jets are more than 30 ft. from the pump. Use 6" x 4" bushings after 4" manifold tees.*

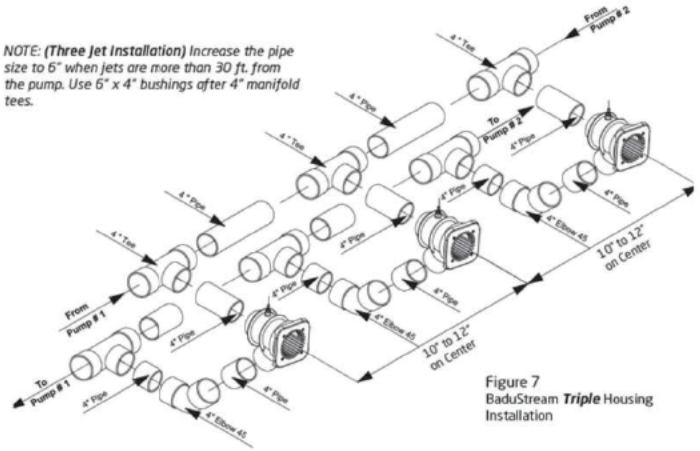

Figure 7
BaduStream ***Triple*** Housing Installation

IMPORTANT NOTE: ***CHECK VALVES MUST BE*** *used on the discharge side of each pump. Minimum 4" pipe between pump and BaduStream plumbing manifold.*

sample photos





Figure 8

Slide 3

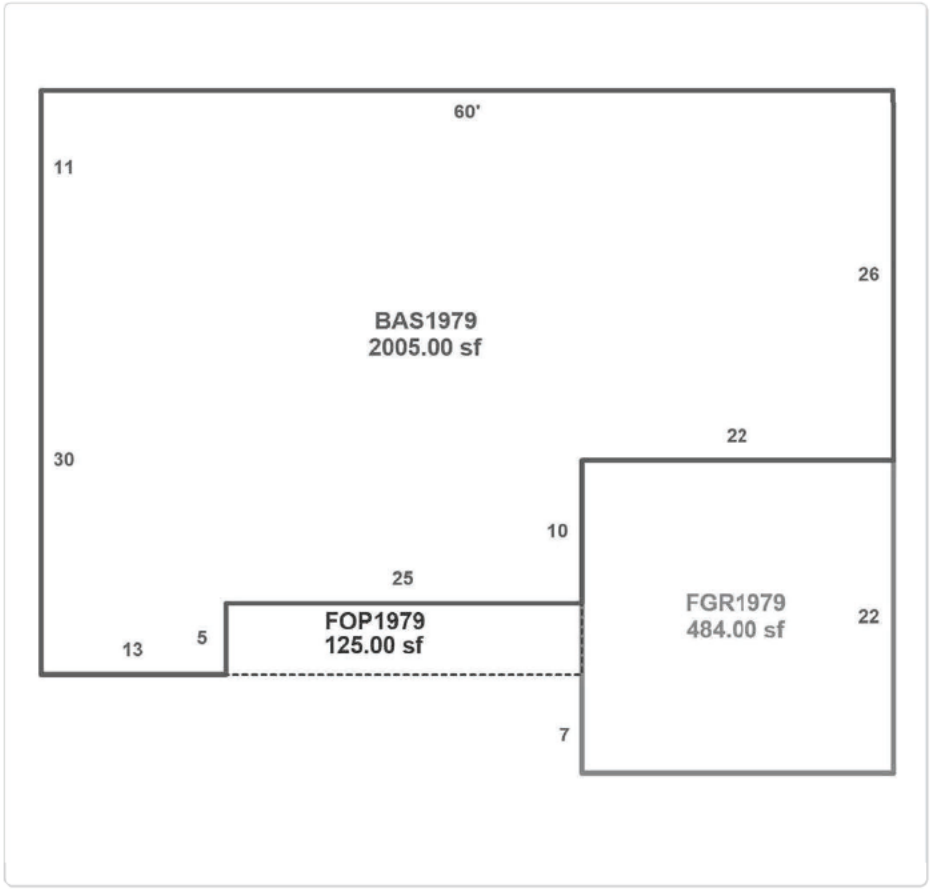

3 Pelican Ln

FOOTPRINT and WALLS – NO back porch (or plywood) indicated

Source: Flagler Co. Property Appraisers Office

Building Area Types

Type	Description	Sq. Footage	Act Year
BAS	BASE AREA	2,005	1979
FGR	F GARAGE	484	1979
FOP	F OPN PRCH	125	1979

000003

Slide 4

Owner Information

Primary Owner
Royer Raymond R Jr & Janice L
Paxson
3 Pelican Lane
Flagler Beach, FL 32136

Parcel Summary

Parcel ID	23-11-31-5300-00000-0130
Prop ID	72186
Location Address	3 PELICAN LN FLAGLER BEACH, FL 32136
Brief Tax Description*	RIVER BEACH SUBD LOT 13 & S 8' OF LOT 16 OR 98 PG 436 OR 117 PG 673 OR 282 PG 842 OR 446 PG 1875 OR 607 PG 593 OR 989 PG 468 OR 1349 PG 424 OR 1637 PG 1824-CD OR 1664/1311-CT OR 1684/843 OR 2123/1590 OR 2231/845 (Note: *The Description above is not to be used on legal documents.)
Property Use Code	SINGLE FAMILY (000100)
Tax District	UNINCORPORATED AREA WITH MOSQUITO CONTROL (District 1)
Millage Rate	14.1324
Homestead	Y
GIS sqft	7,499.556

View Map

Residential Buildings

Building	1
Type	SINGLE FAM
Total Area	2614
Heated Area	2005
Exterior Walls	CON.STUCCO
Roof Cover	ASP/COM SH
Interior Walls	DRYWALL
Frame Type	MASONRY
Floor Cover	CERA/CLAY; HARDWOOD
Heat	FO AIR DCT
Air Conditioning	CENTRAL
Bedrooms	3
Bathrooms	2
Actual Year Built	1979
Effective Year Built	2009

Sketches

Exterior Walls: Con/Stucco
Frame: Masonry

000002

Slide 5 – Backyard 3 Pelican



Property markers placed by Applicant

Existing downspouts extend onto adjacent property.

Impervious pool deck will extend to west property line.

Adding large pool/pump house, beyond minimum needed, will worsen runoff onto Pelican and Mockingbird.

Recorded Covenants

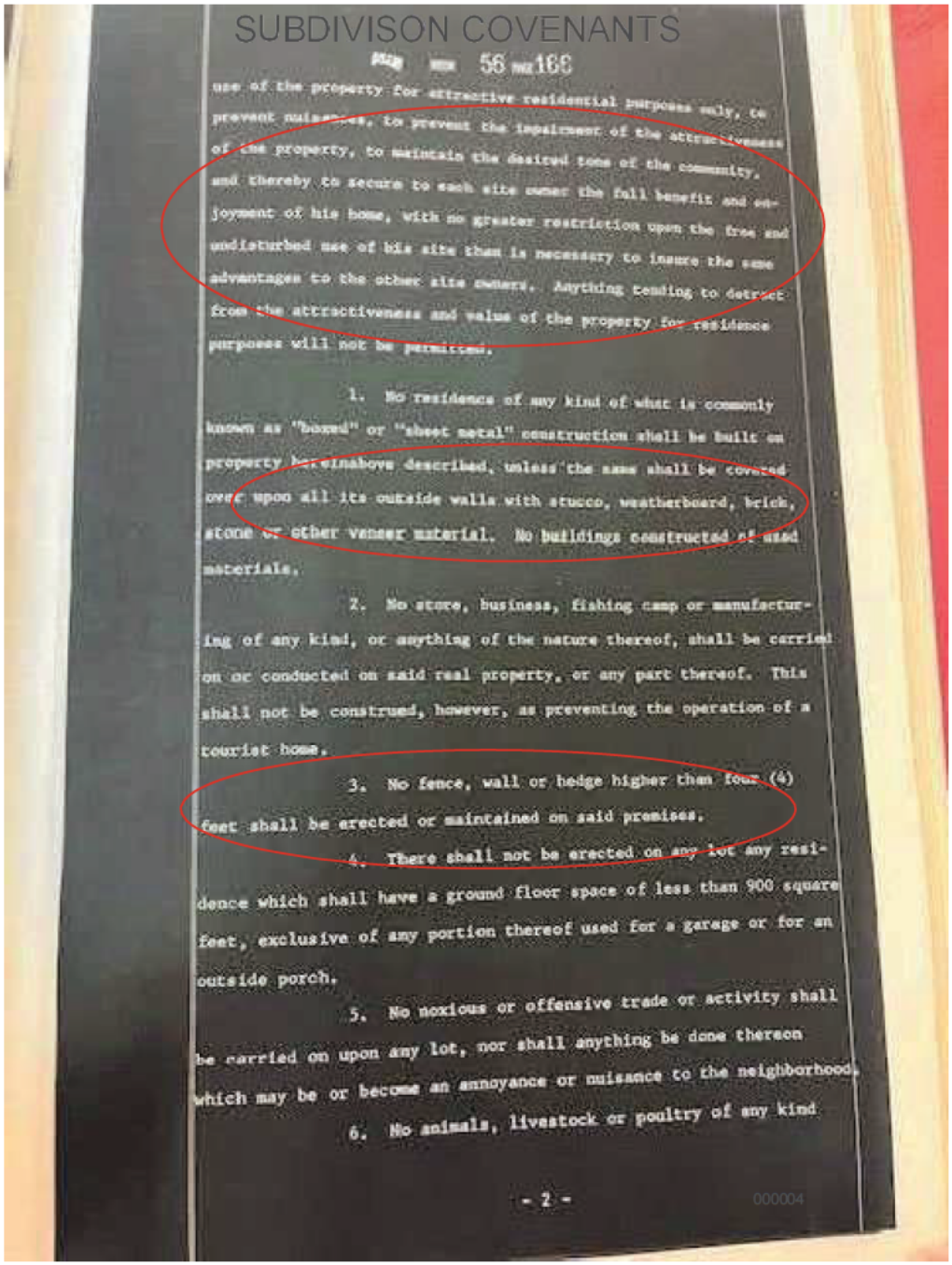

SUBDIVISON COVENANTS

Map ... 56 pg 166

use of the property for attractive residential purposes only, to prevent nuisances, to prevent the impairment of the attractiveness of the property, to maintain the desired tone of the community, and thereby to secure to each site owner the full benefit and enjoyment of his home, with no greater restriction upon the free and undisturbed use of his site than is necessary to insure the same advantages to the other site owners. Anything tending to detract from the attractiveness and value of the property for residence purposes will not be permitted.

1. No residence of any kind of what is commonly known as "boxed" or "sheet metal" construction shall be built on property hereinabove described, unless the same shall be covered over upon all its outside walls with stucco, weatherboard, brick, stone or other veneer material. No buildings constructed of used materials.

2. No store, business, fishing camp or manufacturing of any kind, or anything of the nature thereof, shall be carried on or conducted on said real property, or any part thereof. This shall not be construed, however, as preventing the operation of a tourist home.

3. No fence, wall or hedge higher than four (4) feet shall be erected or maintained on said premises.

4. There shall not be erected on any lot any residence which shall have a ground floor space of less than 900 square feet, exclusive of any portion thereof used for a garage or for an outside porch.

5. No noxious or offensive trade or activity shall be carried on upon any lot, nor shall anything be done thereon which may be or become an annoyance or nuisance to the neighborhood.

6. No animals, livestock or poultry of any kind

- 2 -

000004

Slide 6

River Beach Covenants

- "maintain the tone of the community"
- "not detract...from value"
- Limit fence height to 4' [property lines]

Applicant's artist drawing:
"computer-generated, not to scale"



Actual photo taken from street level.
Mockup of impaired sightlines, extending to 2.5' of property line.



Required street side setback 25'
Variance requested 22'+, for oversized pump house.

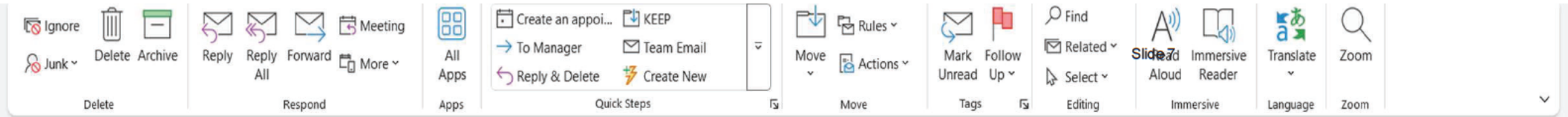

Slide 7

Variances within River Beach subdivision

AM

Adam Mengel, AICP, LEED AP BD+C <amengel@flaglercounty.gov>
To Jackie OConnell
Cc PublicRecords; Simone Kenny, AICP

Reply | Reply All | Forward | ...

Fri 7/18/2025 4:20 PM

This message has been replied to or forwarded.

Hi Ms. O'Connell:

I checked Department records for variances within River Beach using the following search terms:

- "23-11-31-5300"
- "Cardinal"
- "Mockingbird"
- "Pelican"
- "River Beach"

No files were found other than the variance files associated with Mr. Royer's request at 3 Pelican Lane.

Please contact me with any questions.

Thank you,

Adam

Adam Mengel, AICP, LEED AP BD+C
Growth Management Director

E: amengel@flaglercounty.gov | V: 386-313-4065 | W: www.flaglercounty.gov

Email from Mr. Mengel – no variances in River Beach subdivision.

Two new houses and two new pools since 2017 – undersized lots, no variances.

Owners value the neighborhood character.

From:	George Benoit
To:	Simone Kenny, AICP
Cc:	O"Connell Daniel & Jacqueline; Hare Robert & Natalie; Ayer Sari; Lane Terri
Subject:	Objection to Royer Variance Request
Date:	Sunday, September 7, 2025 2:00:57 PM
Attachments:	3 Pelican Ray-GEB 2.pdf

George

September 6, 2025

Flagler County Planning & Development

Dear sirs:

Re: Project No. 2025080063

Please include my objection again to the requested variance. I had provided the attached letter and photos for previous hearings on this matter.

Sincerely,

George E Benoit

17 Pelican Lane &
6 Driftway Terrace
Flagler Beach, FL 32136

July 8, 2025

Flagler County Planning and Development Board
1769 E. Moody Blvd., Bldg 2
Bunnell, FL 32110

RE: Project No. 2025050042 – AR 5689 – Variance in the R/C (Residential Limited Commercial) District

Dear sirs:

I am opposed to the requested variance for the following reasons:

1. I own two properties at the end of Pelican Lane. Pelican Lane slopes from route A1A down to the intracoastal waterway and all the stormwater runoff ends up in both of my yards every time we have a heavy rain.

2. The lots in the subdivision are all small under 10,000 ft.^{2}.

3. Granting a variance for a large shed roof will add to the water runoff and more accumulation on my property, which I don't need.

4. By approving this variance you will be setting a precedent for this type of request.

5. See 3 photos.

   a. Pelican Lane looking up to A1A.
   b. Sand and stone that washes down after storms.
   c. Flooded yard.

Sincerely,

George E. Benoit


STOP





From: Teresa Lane
To: Simone Kenny, AICP
Subject: Project No. 2025050042-AR 5689 Variance
Date: Monday, September 8, 2025 8:22:09 AM

September 8, 2025

Flagler County Planning and Development
1768 E. Moody Blvd. Bldg. 2
Bunnell. Fl 32110

Dear Sirs;

The residents of 6 Cardinal Lane, in the River Beach Subdivision, are against the passing of the variance requested by Mr. Royer. We are concerned that his project will cause more deterioration of our roads, due to improper drainage.
We feel that granting this variance will entitle all other homeowners the same consideration.
We realize that Mr. Royer has been very persistent with his request for the variance and this has continued for many months. We ask that you please not approve this variance just to bring an end to his request.

Sincerely,

Theresa Lane
386-517-8731
Sari Ayer
386-793-4166

Sent from my iPhone

Adam Mengel, AICP, LEED AP BD+C

From: rental POC, Nan <[redacted]gmail.com>
Sent: Monday, September 8, 2025 9:02 AM
To: Planning Dept; Jackie OConnell
Subject: Sep 9 Planning Board Mtg, proj# 2025080063- 3 Pelican Lane
Attachments: Scanned Document.pdf

Pls vote NO and see my attached comments

From:	Jajlo
To:	Simone Kenny, AICP; Jeff Rizk ICE
Subject:	Project No. 2025050042-AR5689 Variance in the Residential/Limited Commercial District.
Date:	Monday, September 8, 2025 9:50:14 AM
Attachments:	To Flagler County Planning and Development.docx

Please read attached letter.
Thank you,
Dawn Harris

To: Flagler County Planning and Development

1468E Moody Blvd

Bldg 2

Bunnell Fl 32110

Project No. 2025050042-AR5689 Variance in the residential/limited commercial district.

Dear Sir/Ma'am,

The residents at 3 Cardinal Ln in the River Beach Subdivision are against the passing of the variance requested by Mr. Royer. We are concerned about this project causing further damage to our roads and this will set precedence for future homeowners to do the same thing. We know Ray Royer has been very persistent in trying to get his variance, but we ask that you do not approve this variance.

On a personal note, I grew up in this neighborhood and most of the homes were built by my great uncle Charles "Red" Bourland, who was also the mayor of Flagler Beach back in the 80' s. My goal is to keep the integrity of our neighborhood as was set down by my family.

Thank you,

Dawn Harris

5867385237

Jeff Rizk

5865562279

Adam Mengel, AICP, LEED AP BD+C

From: Simone Kenny, AICP
Sent: Monday, September 8, 2025 1:43 PM
To: Simone Kenny, AICP
Cc: Adam Mengel, AICP, LEED AP BD+C; Chuck Merenda
Subject: FW: Objection to Royer Variance Request
Attachments: 3 Pelican Ray-GEB 2.pdf

Good afternoon Planning and Development Board members:

Please see below and attached regarding Item No. 10 on tomorrow's Planning and Development Board regular meeting agenda.

Please contact us with any questions.

Thank you,

Adam

Simone Kenny, AICP
Senior Planner

E: [redacted]flaglercounty.gov | V: 386-313-4067 | W: www.flaglercounty.gov

Flagler County Board of County Commissioners

Bunnell, FL 32110

The mission of Flagler County is to provide high-quality services through a responsive workforce committed to excellence, integrity, in collaboration with the cities and to act as a fiscally responsible steward.

From: George Benoit <[redacted]icloud.com>
Sent: Sunday, September 7, 2025 2:00 PM
To: Simone Kenny, AICP <[redacted]flaglercounty.gov>
Cc: O'Connell Daniel & Jacqueline <[redacted]yahoo.com>; Hare Robert & Natalie <[redacted]bellsouth.net>; Ayer Sari <[redacted]bellsouth.net>; Lane Terri <[redacted]bellsouth.net>
Subject: Objection to Royer Variance Request

George

Adam Mengel, AICP, LEED AP BD+C

From: Simone Kenny, AICP
Sent: Monday, September 8, 2025 2:00 PM
To: [redacted]ptd.net
Cc: Adam Mengel, AICP, LEED AP BD+C; Chuck Merenda
Subject: FW: Objection to Royer Variance Request
Attachments: 3 Pelican Ray-GEB 2.pdf

Mr. Royer,

Please see below and attached regarding your item on tomorrow's Planning and Development Board regular meeting agenda.

Best,
Simone

Simone Kenny, AICP
Senior Planner

E: [redacted]flaglercounty.gov | V: 386-313-4067 | W: www.flaglercounty.gov

FLAGLER COUNTY FLORIDA

Flagler County Board of County Commissioners

Bunnell, FL 32110

The mission of Flagler County is to provide high-quality services through a responsive workforce committed to excellence, integrity, in collaboration with the cities and to act as a fiscally responsible steward.

From: Simone Kenny, AICP
Sent: Monday, September 8, 2025 1:43 PM
To: Simone Kenny, AICP <[redacted]flaglercounty.gov>
Cc: Adam Mengel, AICP, LEED AP BD+C <[redacted]flaglercounty.gov>; Chuck Merenda <[redacted]flaglercounty.gov>
Subject: FW: Objection to Royer Variance Request

Good afternoon Planning and Development Board members:

Please see below and attached regarding Item No. 10 on tomorrow's Planning and Development Board regular meeting agenda.

Please contact us with any questions.

Thank you,

Adam

Simone Kenny, AICP
Senior Planner

E: [redacted]flaglercounty.gov | V: 386-313-4067 | W: www.flaglercounty.gov

Flagler County Board of County Commissioners

Bunnell, FL 32110

The mission of Flagler County is to provide high-quality services through a responsive workforce committed to excellence, integrity, in collaboration with the cities and to act as a fiscally responsible steward.

From: George Benoit <[redacted]icloud.com>
Sent: Sunday, September 7, 2025 2:00 PM
To: Simone Kenny, AICP <[redacted]flaglercounty.gov>
Cc: O'Connell Daniel & Jacqueline <[redacted]yahoo.com>; Hare Robert & Natalie <[redacted]bellsouth.net>; Ayer Sari <[redacted]bellsouth.net>; Lane Terri <[redacted]bellsouth.net>
Subject: Objection to Royer Variance Request

George

September 6, 2025

Flagler County Planning & Development

Dear sirs:

Re: Project No. 2025080063

Please include my objection again to the requested variance. I had provided the attached letter and photos for previous hearings on this matter.

Sincerely,

George C Benoit

George E Benoit

17 Pelican Lane &
6 Driftway Terrace
Flagler Beach, FL 32136

July 8, 2025

Flagler County Planning and Development Board
1769 E. Moody Blvd., Bldg 2
Bunnell, FL 32110

RE: Project No. 2025050042 – AR 5689 – Variance in the R/C (Residential Limited Commercial) District

Dear sirs:

I am opposed to the requested variance for the following reasons:

1. I own two properties at the end of Pelican Lane. Pelican Lane slopes from route A1A down to the intracoastal waterway and all the stormwater runoff ends up in both of my yards every time we have a heavy rain.

2. The lots in the subdivision are all small under 10,000 ft.^{2}.

3. Granting a variance for a large shed roof will add to the water runoff and more accumulation on my property, which I don't need.

4. By approving this variance you will be setting a precedent for this type of request.

5. See 3 photos.

   a. Pelican Lane looking up to A1A.
   b. Sand and stone that washes down after storms.
   c. Flooded yard.

Sincerely,

George C Benoit

George E. Benoit

STOP





Adam Mengel, AICP, LEED AP BD+C

From: Dan OConnell <[redacted]yahoo.com>
Sent: Monday, September 8, 2025 2:40 PM
To: Planning Dept; Simone Kenny, AICP
Subject: 3 Pelican Variance Sept hearing
Attachments: Installation Manual - BaduStream II ENG.pdf

Attached is email correspondence with Badu Customer Service Manager confirming pumps would not be impacted by 4 foot height limit on the pump house. This was submitted last month but would like it to be included again.
Please include in public record and send to the board
Thank You

Begin forwarded message:

From: Chris Calise <c.[redacted]speck-pumps.com>
Date: August 11, 2025 at 11:49:28 AM EDT
To: Dan OConnell <[redacted]yahoo.com>
Subject: RE: Test - requirements

That's correct,

Very important, the 4" check valves will need to be installed on top of the discharge side of each pump.

Chris Calise
Customer Service Manager

Speck Pumps · 8125 Bayberry Road · Jacksonville, FL 32256 · USA
Phone: 904-739-2626 | Toll Free: 800-BADUJET (223-8538) | Fax: 904-737-5261
E-mail: c.[redacted]speck-pumps.com | Website: www.speck-pumps.com
Download Page for Brochures & Manuals: Click Here
Download the 2025 Catalog here: English Version & Spanish Version

-----Original Message-----
From: Dan OConnell <[redacted]yahoo.com>
Sent: Monday, August 11, 2025 11:34 AM
To: Chris Calise <c.[redacted]speck-pumps.com>
Subject:

Thanks. Just to confirm the pipes coming out of the pump would be less than a total of 4 feet including pump so the height of the pump house doesn't need to be higher than 4 feet correct?

Dan

Sent from my iPhone

On Aug 11, 2025, at 11:24 AM, Chris Calise <c.[redacted]speck-pumps.com> wrote:

Hi Dan,

Brochure attached with measurements. Also attached a couple of install pictures for the (2) 21-80/33GS pumps. Any questions let us know.

Thanks

Chris Calise

Customer Service Manager

Speck Pumps • 8125 Bayberry Road • Jacksonville, FL 32256 • USA

Phone: 904-739-2626 | Toll Free: 800-BADUJET (223-8538) | Fax: 904-737-5261

E-mail: c.[redacted]speck-pumps.com | Website: www.speck-pumps.com

Download Page for Brochures & Manuals: Click Here Download the 2025 Catalog here: English Version & Spanish Version

-----Original Message-----

From: Dan OConnell <[redacted]yahoo.com>

Sent: Monday, August 11, 2025 11:19 AM

To: Chris Calise <c.[redacted]speck-pumps.com>

Chris to confirm the Jet Stream Package D with 3 jets and 2 pumps only requires a pad less than 4 feet and the height required is less than 3 feet

Thanks

Dan OConnell

Sent from my iPhone

_____

NOTICE OF CONFIDENTIALITY: This e-mail from Speck Pumps-Pool Products, Inc. is intended only for the use of the individual or entity to whom it is addressed and may contain confidential, copyrighted and/or legally privileged information. If you are not the intended recipient, you are hereby notified that any dissemination, distribution or copying of this e-mail is strictly prohibited. It is strictly forbidden to share any part of this message with any third party, without written consent of the sender. If you received this e-mail in error please return it to the sender and destroy the original message. Thank you.

While anti-virus software is in place the recipient should be aware that this e-mail and any attachments might not be free from viruses in their various forms. Speck Pumps-Pool Products, Inc. accepts no liability for any loss or damage that may occur as a result of the transmission to the recipient.

<Cut sheet - Model 21-80 G GS.pdf>

<Check Valve Install -1.jpg>

<Check Valve Install -4.jpg>

_____

NOTICE OF CONFIDENTIALITY: This e-mail from Speck Pumps-Pool Products, Inc. is intended only for the use of the individual or entity to whom it is addressed and may contain confidential, copyrighted and/or legally privileged information. If you are not the intended recipient, you are hereby notified that any dissemination, distribution or copying of this e-mail is strictly prohibited. It is strictly forbidden to share any part of this message with any third party, without written consent of the sender. If you received this e-mail in error please return it to the sender and destroy the original message. Thank you.

While anti-virus software is in place the recipient should be aware that this e-mail and any attachments might not be free from viruses in their various forms. Speck Pumps-Pool Products, Inc. accepts no liability for any loss or damage that may occur as a result of the transmission to the recipient.

From: Dan OConnell
To: Planning Dept; Simone Kenny, AICP
Subject: 3 Pelican Variance Sept hearing
Date: Monday, September 8, 2025 2:42:28 PM
Attachments: Installation Manual - BaduStream II ENG.pdf

Attached is email correspondence with Badu Customer Service Manager confirming pumps would not be impacted by 4 foot height limit on the pump house. This was submitted last month but would like it to be included again.
Please include in public record and send to the board
Thank You

Begin forwarded message:

From: Chris Calise <c[redacted]speck-pumps.com>
Date: August 11, 2025 at 11:49:28 AM EDT
To: Dan OConnell <[redacted]yahoo.com>
Subject: RE: Test - requirements

That's correct,

Very important, the 4" check valves will need to be installed on top of the discharge side of each pump.

Chris Calise
Customer Service Manager

Speck Pumps · 8125 Bayberry Road · Jacksonville, FL 32256 · USA
Phone: 904-739-2626 | Toll Free: 800-BADUJET (223-8538) | Fax: 904-737-5261
E-mail: c[redacted]speck-pumps.com | Website: www.speck-pumps.com
Download Page for Brochures & Manuals: Click Here
Download the 2025 Catalog here: English Version & Spanish Version

-----Original Message-----
From: Dan OConnell <[redacted]yahoo.com>
Sent: Monday, August 11, 2025 11:34 AM
To: Chris Calise <c[redacted]speck-pumps.com>
Subject:

Thanks. Just to confirm the pipes coming out of the pump would be less than a total of 4 feet including pump so the height of the pump house doesn't need to be higher than 4 feet correct?

Dan

Sent from my iPhone

On Aug 11, 2025, at 11:24 AM, Chris Calise <c[redacted]speck-pumps.com> wrote:

Hi Dan,

Brochure attached with measurements. Also attached a couple of install pictures for the (2) 21-80/33GS pumps. Any questions let us know.

Thanks

Chris Calise

Customer Service Manager

Speck Pumps • 8125 Bayberry Road • Jacksonville, FL 32256 • USA

Phone: 904-739-2626 | Toll Free: 800-BADUJET (223-8538) | Fax:

904-737-5261

E-mail: c[redacted]speck-pumps.com | Website: www.speck-pumps.com

Download Page for Brochures & Manuals: Click Here Download the 2025

Catalog here: English Version & Spanish Version

-----Original Message-----

From: Dan OConnell <[redacted]yahoo.com>

Sent: Monday, August 11, 2025 11:19 AM

To: Chris Calise <c[redacted]speck-pumps.com>

Chris to confirm the Jet Stream Package D with 3 jets and 2 pumps only

requires a pad less than 4 feet and the height required is less than 3

feet

Thanks

Dan OConnell

Sent from my iPhone

NOTICE OF CONFIDENTIALITY: This e-mail from Speck Pumps-Pool Products, Inc. is intended only for the use of the individual or entity to whom it is addressed and may contain confidential, copyrighted and/or legally privileged information. If you are not the intended recipient, you are hereby notified that any dissemination, distribution or copying of this e-mail is strictly prohibited. It is strictly forbidden to share any part of this message with any third party, without written consent of the sender. If you received this e-mail in error please return it to the sender and destroy the original message. Thank you.

While anti-virus software is in place the recipient should be aware that this e-mail and any attachments might not be free from viruses in their various forms. Speck Pumps-Pool Products, Inc. accepts no liability for any loss or damage that may occur as a result of the transmission to the recipient.

<Cut sheet - Model 21-80 G GS.pdf>

<Check Valve Install -1.jpg>

<Check Valve Install -4.jpg>

NOTICE OF CONFIDENTIALITY: This e-mail from Speck Pumps-Pool Products, Inc. is intended only for the use of the individual or entity to whom it is addressed and may contain confidential, copyrighted and/or legally privileged

information. If you are not the intended recipient, you are hereby notified that any dissemination, distribution or copying of this e-mail is strictly prohibited. It is strictly forbidden to share any part of this message with any third party, without written consent of the sender. If you received this e-mail in error please return it to the sender and destroy the original message. Thank you.

While anti-virus software is in place the recipient should be aware that this e-mail and any attachments might not be free from viruses in their various forms. Speck Pumps-Pool Products, Inc. accepts no liability for any loss or damage that may occur as a result of the transmission to the recipient.

From:	Jan
To:	Simone Kenny, AICP; Adam Mengel, AICP, LEED AP BD+C
Subject:	Request for Fair Review Application #2025080063 of Pool House/Pump House/Shed Project
Date:	Tuesday, September 9, 2025 12:36:25 AM

Dear Simone,

I am writing this letter as the homeowner. My husband, Raymond Royer, has been submitting and presenting applications to the county since February 2025. He has attended the TRC meetings prior to each application, asked questions, and sought guidance every step of the way — and yet we are still at a dead end.

Our project includes a small pool and a pool house/pump house/shed designed to be 9'7" high. The county's suggestion that we should use a 4-foot high shed is not practical or realistic. The structure must allow someone to stand inside to properly service the pool motor and to store patio furniture and equipment during storms. Our design is professional, aesthetically matches our home, and fully complies.

Instead of focusing on the facts and zoning requirements, we have been subjected to months of irrelevant and baseless objections from a small group of neighbors, two of which do not even reside in our community full-time. These property owners have been the most vocal about our project, even though it does not directly affect their property or rights as owners. Their objections are nothing more than ridiculous guessing and misunderstandings. To suggest we "swim in the ocean," "throw patio furniture into the pool," or that the pool house could somehow become living quarters or an Airbnb has no basis in reality.

One neighbor even claimed our professional renderings are "just computer-generated pictures" instead of recognizing that they were created to county specifications. This same neighbor went so far as to take a photo of our home and use a marker tool to draw their own version of what they thought we were requesting. That type of misrepresentation is absurd and misleading.

We have always spoken with our neighbors cordially and have acted in good faith throughout this process, following every rule, request, and requirement from the county. The truth is that some neighbors are using unrelated disputes — like our private roadway disagreements — to stir up conflict and delay our project.

It is our request that the county:

1. Disregard irrelevant, speculative, and inaccurate objections that are not tied to this project or zoning requirements.
2. Recognize that our project meets county requirements and is designed responsibly.
3. Provide a fair and timely resolution so we can move forward without further hardship.

This situation has cost us significant personal time, reapplication fees, rendering design expenses, and repeated document submissions. It has also caused unnecessary stress and division in the community.

We expect and request a fair decision in this matter, and we ask that the county reciprocate the good faith we have shown throughout this process by providing a timely and reasonable resolution.

The pool house/pump house/shed dimensions are well under the county's maximum allowance of 12 feet in height, and our project fully complies with the applicable standards.

Thank you for your attention and for moving this forward based on facts and requirements, not speculation.

Sincerely,

Jan Paxson

3 Pelican Lane

Adam Mengel, AICP, LEED AP BD+C

From: Jackie O'Connell <[redacted]yahoo.com>
Sent: Tuesday, September 9, 2025 9:15 AM
To: Simone Kenny, AICP; Planning Dept
Subject: Runoff 3 Pelican for Public Record and PDB
Attachments: 3 Pelican runoff after rainstorm.jpeg

This is a photo of the runoff in front of 3 Pelican taken after the rainstorm night before last (~7pm Sept 7, Sunday). The water runoff will be worse when the impervious pool deck and (possible) large pump house are built. Unless Mr. Royer intends to redirect his **existing front downspouts across his front lawn** toward Pelican**,** a **similar issue** will be created on Mockingbird when the **existing front side** downspouts are redirected to Mockingbird**.** And when Mr. Royer's **existing downspouts on back corner of his house are removed off adjacent property*** which is not owned by Mr. Royer **and redirected to Mockingbird**, it will be an **even worse issue** on Mockingbird.

When we get 12-15" rain during a hurricane followed by high tides, the neighborhood streets are going to have a real problem. This is why **we've requested the 3 Pelican variance plan address how runoff will be mitigated and/or kept on Royer property**.

* photo showing Royer backyard downspouts extending beyond his property line was previously submitted

Thank you,

Jackie O'Connell
[redacted]yahoo.com
336.512.9671 mobile



Adam Mengel, AICP, LEED AP BD+C

From: Simone Kenny, AICP
Sent: Tuesday, September 9, 2025 9:46 AM
To: [redacted]ptd.net
Cc: Adam Mengel, AICP, LEED AP BD+C; Chuck Merenda
Subject: FW: 3 Pelican Variance Sept hearing
Attachments: Installation Manual - BaduStream II ENG.pdf

Mr. Royer,

Please see below and attached regarding your item on tomorrow's Planning and Development Board regular meeting agenda.

Best,
Simone

Simone Kenny, AICP
Senior Planner

E: [redacted]flaglercounty.gov | V: 386-313-4067 | W: www.flaglercounty.gov

Flagler County Board of County Commissioners

Bunnell, FL 32110

The mission of Flagler County is to provide high-quality services through a responsive workforce committed to excellence, integrity, in collaboration with the cities and to act as a fiscally responsible steward.

From: Simone Kenny, AICP
Sent: Tuesday, September 9, 2025 9:46 AM
To: Simone Kenny, AICP <[redacted]flaglercounty.gov>
Cc: Adam Mengel, AICP, LEED AP BD+C <[redacted]flaglercounty.gov>; Chuck Merenda <[redacted]flaglercounty.gov>
Subject: FW: 3 Pelican Variance Sept hearing

Please see below and attached regarding Item No. 10 on tomorrow's Planning and Development Board regular meeting agenda.

Please contact us with any questions.

Thank you,
Simone

Simone Kenny, AICP
Senior Planner

E: [redacted]flaglercounty.gov | V: 386-313-4067 | W: www.flaglercounty.gov

Flagler County Board of County Commissioners

Bunnell, FL 32110

The mission of Flagler County is to provide high-quality services through a responsive workforce committed to excellence, integrity, in collaboration with the cities and to act as a fiscally responsible steward.

From: Dan OConnell <[redacted]yahoo.com>
Sent: Monday, September 8, 2025 2:40 PM
To: Planning Dept <[redacted]flaglercounty.gov>; Simone Kenny, AICP <[redacted]flaglercounty.gov>
Subject: 3 Pelican Variance Sept hearing

Attached is email correspondence with Badu Customer Service Manager confirming pumps would not be impacted by 4 foot height limit on the pump house. This was submitted last month but would like it to be included again.
Please include in public record and send to the board
Thank You

Begin forwarded message:

> **From:** Chris Calise <c.[redacted]speck-pumps.com>
> **Date:** August 11, 2025 at 11:49:28 AM EDT
> **To:** Dan OConnell <[redacted]yahoo.com>
> **Subject: RE: Test - requirements**
>
> That's correct,

Very important, the 4" check valves will need to be installed on top of the discharge side of each pump.

Chris Calise
Customer Service Manager

Speck Pumps · 8125 Bayberry Road · Jacksonville, FL 32256 · USA
Phone: 904-739-2626 | Toll Free: 800-BADUJET (223-8538) | Fax: 904-737-5261
E-mail: c.[redacted]speck-pumps.com | Website: www.speck-pumps.com
Download Page for Brochures & Manuals: Click Here
Download the 2025 Catalog here: English Version & Spanish Version

-----Original Message-----
From: Dan OConnell <[redacted]yahoo.com>
Sent: Monday, August 11, 2025 11:34 AM
To: Chris Calise <c.[redacted]speck-pumps.com>
Subject:

Thanks. Just to confirm the pipes coming out of the pump would be less than a total of 4 feet including pump so the height of the pump house doesn't need to be higher than 4 feet correct?

Dan

Sent from my iPhone

> On Aug 11, 2025, at 11:24 AM, Chris Calise <c.[redacted]speck-pumps.com> wrote:
>
> Hi Dan,
>
> Brochure attached with measurements. Also attached a couple of install pictures for the (2) 21-80/33GS pumps. Any questions let us know.
>
> Thanks
> Chris Calise
> Customer Service Manager
> Speck Pumps • 8125 Bayberry Road • Jacksonville, FL 32256 • USA
> Phone: 904-739-2626 | Toll Free: 800-BADUJET (223-8538) | Fax: 904-737-5261
> E-mail: c.[redacted]speck-pumps.com | Website: www.speck-pumps.com
> Download Page for Brochures & Manuals: Click Here Download the 2025 Catalog here: English Version & Spanish Version

-----Original Message-----

From: Dan OConnell <[redacted]yahoo.com>

Sent: Monday, August 11, 2025 11:19 AM

To: Chris Calise <c.[redacted]speck-pumps.com>

Chris to confirm the Jet Stream Package D with 3 jets and 2 pumps only requires a pad less than 4 feet and the height required is less than 3 feet

Thanks

Dan OConnell

Sent from my iPhone

NOTICE OF CONFIDENTIALITY: This e-mail from Speck Pumps-Pool Products, Inc. is intended only for the use of the individual or entity to whom it is addressed and may contain confidential, copyrighted and/or legally privileged information. If you are not the intended recipient, you are hereby notified that any dissemination, distribution or copying of this e-mail is strictly prohibited. It is strictly forbidden to share any part of this message with any third party, without written consent of the sender. If you received this e-mail in error please return it to the sender and destroy the original message. Thank you.

While anti-virus software is in place the recipient should be aware that this e-mail and any attachments might not be free from viruses in their various forms. Speck Pumps-Pool Products, Inc. accepts no liability for any loss or damage that may occur as a result of the transmission to the recipient.

<Cut sheet - Model 21-80 G GS.pdf>

<Check Valve Install -1.jpg>

<Check Valve Install -4.jpg>

NOTICE OF CONFIDENTIALITY: This e-mail from Speck Pumps-Pool Products, Inc. is

intended only for the use of the individual or entity to whom it is addressed and may contain confidential, copyrighted and/or legally privileged information. If you are not the intended recipient, you are hereby notified that any dissemination, distribution or copying of this e-mail is strictly prohibited. It is strictly forbidden to share any part of this message with any third party, without written consent of the sender. If you received this e-mail in error please return it to the sender and destroy the original message. Thank you.

While anti-virus software is in place the recipient should be aware that this e-mail and any attachments might not be free from viruses in their various forms. Speck Pumps-Pool Products, Inc. accepts no liability for any loss or damage that may occur as a result of the transmission to the recipient.

Badu®Stream //

Counter Swimming Unit

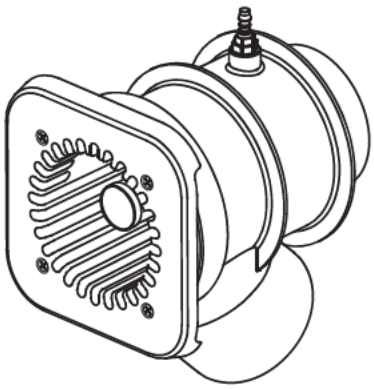

SPECK pumps

Rev. 08/23

Technical Support:

Address: Speck Pumps
8125 Bayberry Road
Jacksonville, FL. 32256
USA

Hours: (Monday - Friday) 8:00 am to 5:00 pm EST
Toll Free: 800-223-8538
Phone: 904-739-2626
Fax: 904-737-5261

Website: usa.speck-pumps.com

Email: technical.usa@speck-pumps.com

Date of Installation:	
Installed by:	
Serial Number:	
For Service Call:	

Manufactured by Speck Pumps, Jacksonville Florida USA, ©2023 All Rights Reserved.

This document is subject to change without notice.

Table of Contents

1	*Important Safety Instructions*	*4*
	SwimJet Combination Fitting Manufacturers Warnings	4
	General Safety Instructions	5
2	*General Description*	*7*
3	*Installation Information*	*7*
	Receiving Information	7
	Plumbing Installation	8
	Concrete or Gunite Installation	13
	Liner and/or Fiberglass Pool Installation	15
	Removal of Liner	16
	Electrical - SPECK Controller Installation	17
4	*Service and Maintenance*	*21*
	Nozzle Adjustments	21
	Winterizing	21
5	*Frequently Asked Questions*	*22*
	Frequently Asked Questions	22
	Troubleshooting	23
6	*Product Specification*	*25*
	Replacement Parts and Exploded View	25
7	*Product Information*	*27*
	Product Registration	27
	Limited Warranty	27

Badu®Stream *II* Certifications

APSP ANSI/APSP-16

NRTL LISTED MET c US Complies with UL 1563 CSA C22.2 No. 218.1-M89 Swimming Pool Equipment Listing #E212148

UL

VGBA 2017

1 Important Safety Instructions

WARNING: *Before Installing this product, read and follow all warning notices and instructions which are included. Failure to follow safety warnings and instructions can result in severe injury, death, or property damage. Call (800) 223-8538 or visit www.usa.speck-pumps.com for additional copies of these instructions.*

Swim Jet Combination Fitting - Manufacturers Warnings

MUST BE INSTALLED by an experienced and qualified pool industry professional **ONLY.**

Attention Installer: This manual contains important information about installation, operation, and safe use of this product. This information should be given to the owner and/or operator of this equipment. Most states and local codes regulate the construction, installation and operation of pools and spas. It is important to comply with these codes, many which regulate the installation and use of this product.

1. ***DO NOT*** *locate this fitting in seating areas or on the back rests for such seating areas.*

2. *This fitting should be mounted in the vertical pool wall only per manufacturer's instructions. No modifications to the swimjet are permitted.*

3. *The anti-entrapment cover, when installed, shall not protrude more than 2 in. (51mm) from the finished surface of the pool in which the swimjet is installed.*

4. ***Service Access:*** *The use of adhesives or other attachment methods that prevent access to suction piping or swimjet components is* ***prohibited.***

5. *The anti-entrapment cover must be hand-checked for snugness to the jet housing after installation.*

6. *The anti-entrapment cover and fasteners shall be examined for damage or tampering each operational day.*

7. *Any missing, broken, or cracked fittings must be replaced before using this product. Only genuine Speck replacement parts may be used.*

8. *Acceptable fittings/pipe sizes are listed on page 8 of this manual. No other sizes are permitted.*

9. *Never exceed the maximum flow rate stated on this product.*

10. *The anti-entrapment cover must be in place when using this product.* ***DO NOT*** *use this product if the cover is missing, broken, or loose, and it shall be replaced before bathers are allowed to use the pool.*

11. *The anti-entrapment cover (part# 8) should be replaced within 10 years from installation date.*

12. *Installation requires a Phillips screw driver. Hand tighten only.* ***DO NOT*** *use electrical or air drills.*

13. *Consult your physician before exercising with the Badu®Stream II or using the massage hose.*

14. ***DO NOT*** *permit children to use this product unless they are closely supervised at all times.*

15. ***DO NOT*** *remove any safety alert labels such as* ***DANGER, WARNING,*** *or* ***CAUTION****. Keep safety alert labels in good condition and replace missing or damaged labels.*

Swim Jet Combination Fitting - Manufacturers Warnings - continued

16. *Stay alert, watch what you are doing and use common sense.* ***DO NOT*** *use unit if you are tired and/or exhausted.* ***DO NOT*** *use unit while under the influence of drugs, alcohol, or any medications.*

CAUTION: ***DO NOT*** *increase pump size; this will increase the flow rate through the system and exceed the maximum flow rate stated on this product.*

IMPROPER INSTALLATION OR USE OF THIS PRODUCT MAY PRESENT A RISK OF HAIR OR BODY ENTRAPMENT AND DROWNING. *Install this equipment in accordance with the instructions provided.*

As the manufacturer, Speck Pumps-Pool Products, Inc., hereby certifies that their Swim Jet Combination Fitting meets or exceeds the requirements of the Virginia Graeme Baker Pool & Spa Safety Act, VGBA 2017 and ANSI/APSP 16 standards and safety regulations as set forth by the Consumer Products Safety Commission.

"Read, and then keep these instructions for future reference"

General Safety Instructions

The following guidelines provide information to minimize the risk of injury to users of pools, spas, and hot tubs.

WARNING: TO REDUCE THE RISK OF ENTRAPMENT HAZARD



Pool and spa pumps produce high levels of suction, which can pose extreme danger if a person comes in close proximity to an open pool or spa drain or if a drain cover is loose, cracked, broken or missing. Pool and spa pumps move large volumes of water, which can pose extreme danger if a person's hair comes in close proximity to a drain that is not the proper size for the pump or pumps.

If not an approved single, unblockable outlet, a minimum of two functioning suction outlets per pump must be installed. Suction outlets in the same plane (i.e. floor or wall) must be installed a minimum of three (3) feet (1 meter) apart, as measured from center point to center point. Dual suction fittings shall not be located on seating areas or on the backrest for such seating areas. If any suction outlets are located closer they shall be located on two different planes (i.e. one on the bottom and one on the vertical wall, or one each on two separate vertical walls).

WARNING: *Failure to keep suction outlet components clear of debris, such as leaves, dirt, hair, paper and other material can result in an increased potential for suction entrapment.*

If not a single, unblockable outlet, in the event of one suction outlet being completely blocked, the remaining suction outlets serving the system shall have a flow rating capable of the full flow of the pump(s) or the specific suction system. If in doubt about the rating and/or head loss curve of your system, consult a qualified pool or spa professional and/or your respective equipment manufacturer(s). Also, double check with your local building/health authorities regarding single vs. multiple drain installations, etc.

Regularly inspect all drain covers for cracks, damage and advanced weathering. If a drain cover becomes loose, cracked, damaged, broken or is missing, close the pool or spa immediately, post a notice and keep the pool or spa closed until an appropriate VGBA 2017 certified drain cover is properly installed.

WATER VELOCITY AND FLOW RATES

The maximum water velocity through drain covers is limited by some local regulations, for example some state health departments limit the velocity through public pool drain covers to 1.5 feet per second. This velocity limit is lower than the flow rating provided by the ANSI/APSP 16 certification; therefore local limit applies and must be followed. Never exceed the flow rating listed on the cover even if local code does not provide a velocity limit.

For additional information on proper installation refer to The Association of Pool & Spa Professionals ANSI/APSP-7 Standard and the US Consumer Product Safety Commission Guidelines for Entrapment Hazard.

VGB Compliance - VIRGINIA GRAEME BAKER POOL AND SPA SAFETY ACT

The Virginia Graeme Baker Pool and Spa Safety Act raises certain new requirements on owners and operators of swimming pools and spas.

Pools or spas constructed on or after December 19, 2008, shall utilize:

(A) No submerged suction outlets, a gravity drainage system with ANSI/APSP compliant cover(s), one or more unblockable outlets; or
(B) A multiple main drain system without isolation capability with suction outlet covers that meet ANSI/APSP 16 Suction Fittings for Use in Swimming Pools, Wading Pools, Spas, and Hot Tubs and either:
    (i) A safety vacuum release system (SVRS) meeting ASME/ANSI A112.19.17 Manufactured Safety Vacuum Release Systems (SVRS) for Residential and Commercial Swimming Pool, Spa, Hot Tub, and Wading Pool Suction Systems and/or ASTM F2387 Standard Specification for Manufactured Safety Vacuum Release Systems (SVRS) for Swimming Pools, Spas and Hot Tubs or
    (ii) A properly designed and tested suction-limiting vent system or
    (iii) An automatic pump shut-off system.

Pools and spas constructed prior to December 19, 2008, with a single submerged suction outlet shall use a suction outlet cover that meets ANSI/APSP 16 and either:

(A) A multiple main drain system without isolation capability, or a single (VGBA 2017 compliant) unblockable suction outlet, or
(B) A safety vacuum release system (SVRS) meeting ASME/ANSI A112.19.17 and/or ASTM F2387, or
(C) A properly designed and tested suction-limiting vent system, or
(D) An automatic pump shut-off system, or
(E) Disabled submerged outlets, or
(F) Suction outlets shall be reconfigured into return inlets.

For more information about the Virginia Graeme Baker Pool and Spa Safety Act, contact the Consumer Product Safety Commission at (301) 504-7908 or visit www.cpsc.gov.

WARNING: *Risk of Electrical Shock or Electrocution*



Pool pump must be installed by a licensed or certified electrician or a qualified pool serviceman in accordance with the National Electrical Code and all applicable local codes and ordinances. Improper installation will create an electric hazard which could result in death or serious injury to pool users, installers, or others due to electrical shock, and may also cause damage to property.

Always disconnect power to the pool pump at the circuit breaker before servicing the pump. *Failure to do so could result in death or serious injury to serviceman, pool users, or others due to electric shock.*

2 General Description

General Description

The BaduStream *II* SwimJet Systems from Speck Pumps are designed to be installed during the construction of your pool to create a water treadmill for anyone wanting a therapeutic and effective exercise.

The BaduStream *II* can be installed in any type of pool, large or small, from gunite to vinyl liner. It has no protruding parts ensuring pool user's safety, is very compact and installs at minimal cost. The self-contained, flush-mounted unit is a jet-propulsion system that pumps water into the pool creating a current in excess of 5,700 gallons per minute from a single recessed jet housing. Topping off the experience is the pulsating massage hose which can be attached to the jet nozzles for easy and convenient massage treatments for joints and muscles. *(NOTE: The massage hose is sold separately.)*

3 Installation Information

Planning

The BaduStream II is normally incorporated into the original pool design. However, it can be added to any pool at a later date. The BaduStream II has no protruding parts, ensuring the pool user's safety. It is very compact and installs at minimal cost. The system can be installed in any size pool.

We suggest a minimum pool size of 8 ft wide x 15 ft long x 3 ft deep to work effectively. Most prefer 16 ft. in length or longer. The extra length allows enough length for a swimmer to comfortably drift back and swim up stream.

To ensure that there is a clear unobstructed swim lane, it is key to position the swimjets away from surroundings walls, benches, stairs, etc. Obstructions near the swimjets can disrupt the current.

1 Ideal Locations*
2 Alternative Locations*
❚❚ Unfavorable Locations

Here are a few examples:

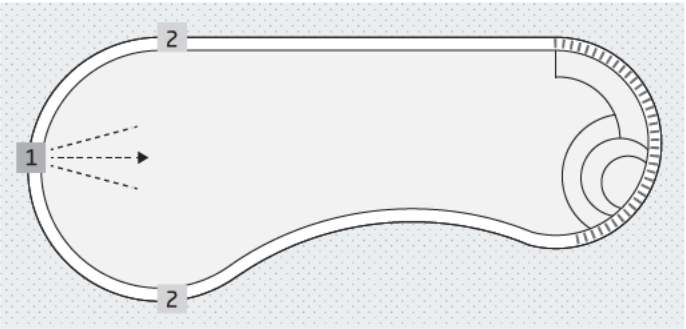

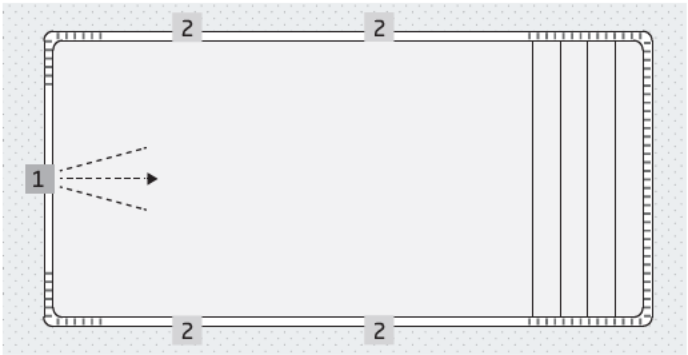

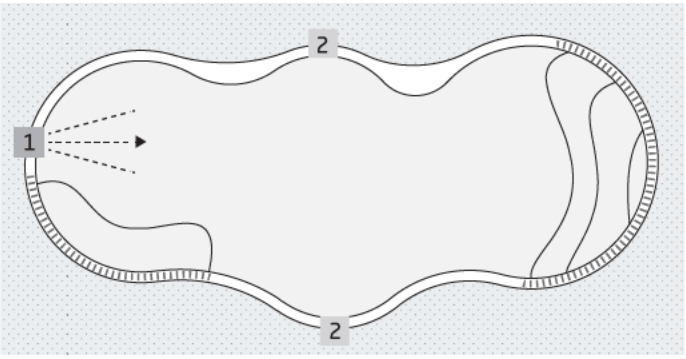

Reminder: BADU SwimJet Systems require a clear **unobstructed area within the swimming pool that is 8 feet wide x 15 feet long x 3 feet deep to work effectively. This "swimming envelope" allows enough length for a swimmer to comfortably drift back and swim up stream.*

Receiving Information

1. Upon receipt of the swimjet system, check the cartons for damage. Open each carton and check the pump(s), jet housing(s), and control box for concealed damage, such as cracks, dents, or a bent base. If damage is found, contact the shipper or distributor where the swimjet was purchased.

2. Inspect the contents of each carton and verify that all parts are included. *(See Image 1)*

A. Flush-mount jet housing

B. Square, anti-entrapment cover (8¼" x 8¼") undetectable pump suction. *(Optional Round Cover available)*

C. Adjustable water flow jet nozzle

D. Air regulator adjusts amount of air bubbles in water flow.

E. Control box complete with GFCI and WiFi control module.

F. SPECK Model 21-80/33GS 4.0 HP (or a SPECK Model 72-VI 3.5 HP) self-priming, single phase plastic pump with built-in thermal overload *(no motor starter required)*. Optional three phase pump and control box available. (*NOTE: Flooded suction pump available for installation below water level.)*

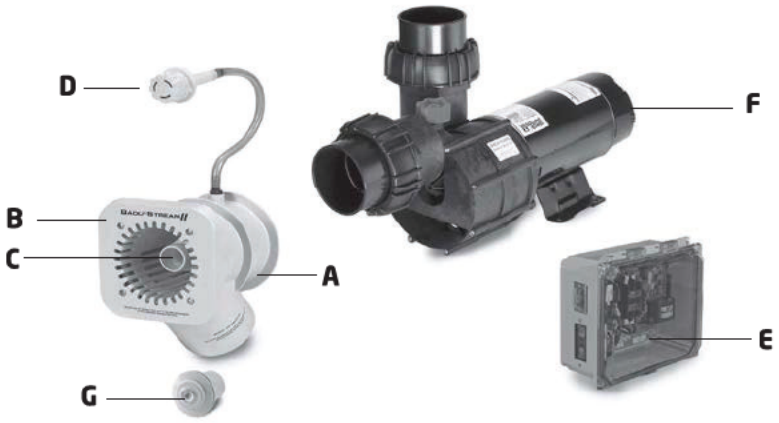

Image 1
BaduStream II System (1 jet & 4 HP pump)

G. System (ON/OFF) LED Push Button - Complete with 1.5" threaded housing fits into any 1.5" return fitting. The push button turns the swimjet system ON/OFF. Waterproof button may be installed below water level.

Plumbing Installation

CAUTION: *The discharge connection is at the center of the back of the jet housing. The suction connection is at the bottom of the jet housing.*

CAUTION: *The suction line should remain below water level from the suction connection at the jet housing to a point directly beneath the pump.*

CAUTION: *The center of the BaduStream jet nozzle(s) must be located 12" **BELOW** the water line for maximum performance and efficiency. The air regulator(s) should be located 3-4" **ABOVE** the water line.*

CAUTION: *In areas with soft soil conditions or with frequent earth movement, a flexible section of 4" hose should be installed at the back of the jet housing to prevent plumbing or jet housing damage.*

CAUTION: *For trouble-free pump priming (up to 4 feet above the water line), first install a 6" long riser in the discharge connection on top of the pump(s). Then install an elbow and lead the discharge line(s) downward to the discharge connection(s) at the BaduStream jet housing(s) (Not required with 3.5 HP pump Model 72). On systems with 3 jet housings and 2 pumps, check valves **MUST** be installed at the discharge connections at each pump.*

CAUTION: *Allow at least 12 hours curing and bonding time. Insufficient curing and bonding times can result in leaks and flooding.*

CAUTION: *Throughout the entire installation, make sure the plumbing connected to the BaduStream jet housing is well supported. Unsupported plumbing **WILL** crack the jet housing.*

CAUTION: ***DO NOT*** *use the pump as a fixed point (support) for the plumbing.*

Plumbing Installation

CAUTION: *When using 6" pipe, install 6" x 4" reducer bushings as close to the jet housing(s) as possible. For systems with 2 or 3 jet housings, install the 6" x 4" reducer bushings as close to the 4" manifold tees as possible. The 6" suction and discharge lines should be run from the jet housing(s) and remain under the water line to a point directly beneath the pump(s). Install 6" elbows at that point. Then run 4" pipe vertically up to the suction and discharge connections of the pump and finish with a 4" elbow.*

- For optimal performance, use 4" plumbing when the total distance between the pump and jet housing is 30 ft or less. The plumbing should be as direct and free from turns or bends as possible because **elbows and other fittings can create large friction losses and reduce the performance of the system. The shortest length of pipe with the minimum number of fittings possible should be used to avoid any significant friction loss due to the pipe and fittings.** *NOTE: Refer to Figure 2 for the BaduStream head loss curve.*

- A maximum of seven (7) 90° elbows may be used with 30 ft of horizontal 4" pipe for the suction line and 30 ft of horizontal pipe for the discharge line without negatively affecting the performance of the system.
  NOTE: This applies to each individual pump used on the system. Refer to Figure 4 for the maximum TDH allowed to achieve recommended flow rates.

- If more elbows are required for the installation, 4" sweeps must be used in place of the elbows. When using sweeps instead of elbows, a maximum of nine (9) 4" sweeps may be used with 30 ft of horizontal 4" pipe for the suction line and 30 ft of horizontal 4" pipe for the discharge line without negatively affecting the performance of the system. *NOTE: This applies to each individual pump used on the system. Refer to Figure 4 for the maximum TDH allowed to achieve recommended flow rates.*

- If the pump(s) cannot be located within 30 ft of the jet housing(s) using the maximum number of 4" elbows or sweeps stated above, then 6" plumbing must be used. For the suction and discharge lines, use 6" plumbing and fittings from the connection at the jet housing (or at the manifolds for two and three jet systems) to a point directly beneath the pump. From that point, install a 6" elbow. Then run 4" pipe vertically up to the suction and discharge connection of the pump and finish with a 4" elbow.

- For two and three jet systems, the jet housings **must be installed as close to 10" center to center as possible for maximum performance. DO NOT install the jet housing more than 12" apart on center.** *(See Figure 1 & 1A)*

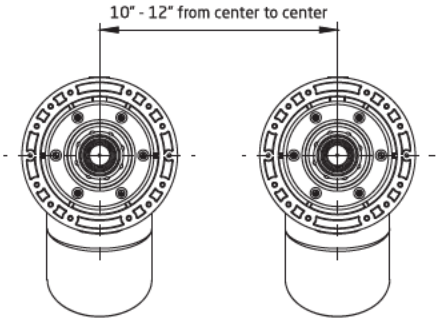

Figure 1
Two Jet (10" - 12" from center to center)

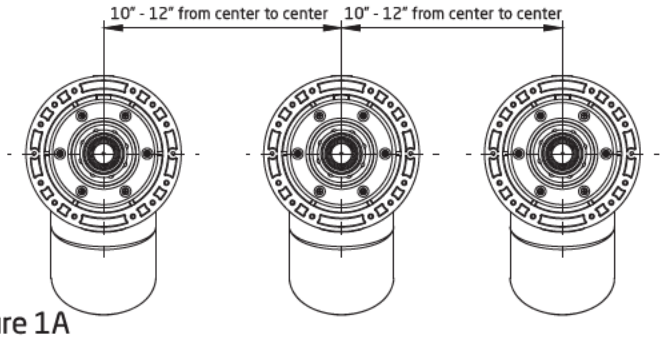

Figure 1A
Three Jet (10" - 12" from center to center)



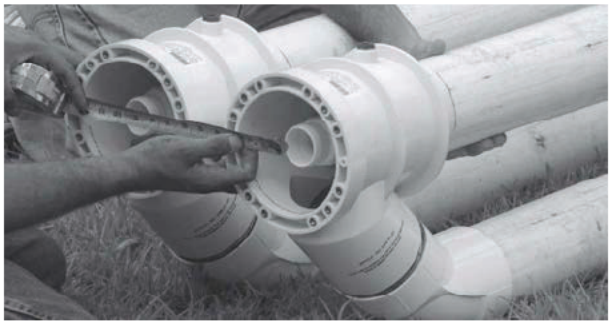

Plumbing Installation - continued

NOTE: Suction lines which are too long have significant disadvantages:

- Higher resistance which results in less efficient priming and a higher risk of cavitation.
- Longer priming time (up to 12 min).
- Keep the suction and pressure lines as short and straight as possible.
- If the pump is positioned further away, then the pipe dimensioning has to be adapted so that almost loss-free flowing is ensured.

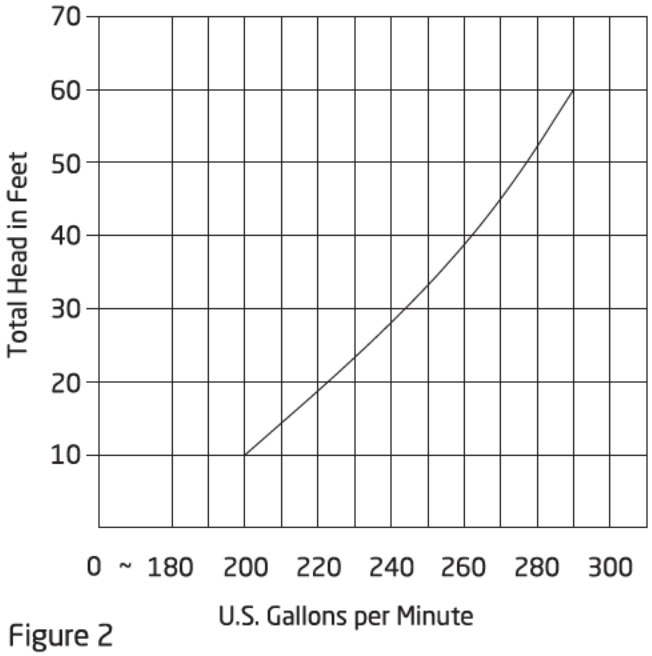

Figure 2
BaduStream II Head Loss Curve *(Single Jet Housing)*

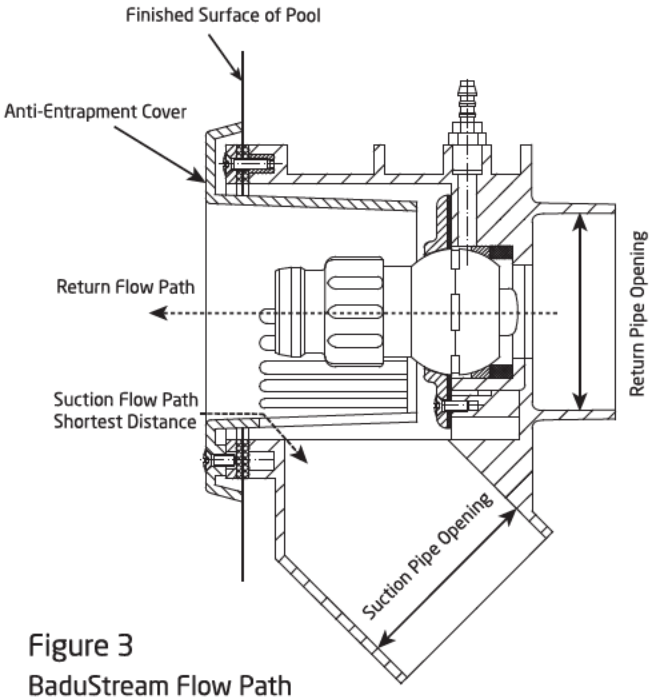

Figure 3
BaduStream Flow Path

NOTE: The BaduStream assembly package contains all necessary parts for the installation of the unit into concrete, gunite, liner or fiberglass pools.

CAUTION: *All necessary screws and bolts included with the BaduStream are stainless steel. ALL screw threads and threaded inserts are METRIC! ONLY METRIC bolts and nuts may be used! The two exceptions are the suction and discharge connections on the BaduStream and pump housing (4" slip connections) and the mounting hardware for the air regulator assembly (1/4 -20 threads). All screws should be HAND TIGHT.* ***DO NOT*** *use drills or pneumatic tools.* ***DO NOT*** *over tighten!*

Plumbing Requirements

BaduStream *II*	Pump	Distance	Pipe Size	Approx. Flow	TDH
Three Jets	(2) 4 HP	10 to 30 ft. up to 50 ft.*	4" 6"	651 GPM 651 GPM	42 ft 42 ft
Two Jets	4 HP	10 to 30 ft. up to 50 ft.*	4" 6"	380 GPM 400 GPM	34 ft 32 ft
One Jet	4 HP	10 to 30 ft. up to 50 ft.*	4" 6"	217 GPM 217 GPM	53 ft 53 ft
One Jet	3 HP	10 to 30 ft. up to 50 ft.*	4" 6"	200 GPM 200 GPM	12 ft 12 ft

** 6" pipe will allow distances of well over 50 ft. There is 50ft of cable included with the push button. If a longer distance to the control box is required, a junction box can be installed above the water line to splice additional cable as required or you may purchase a 100 ft. button (part# 2336002800B).*

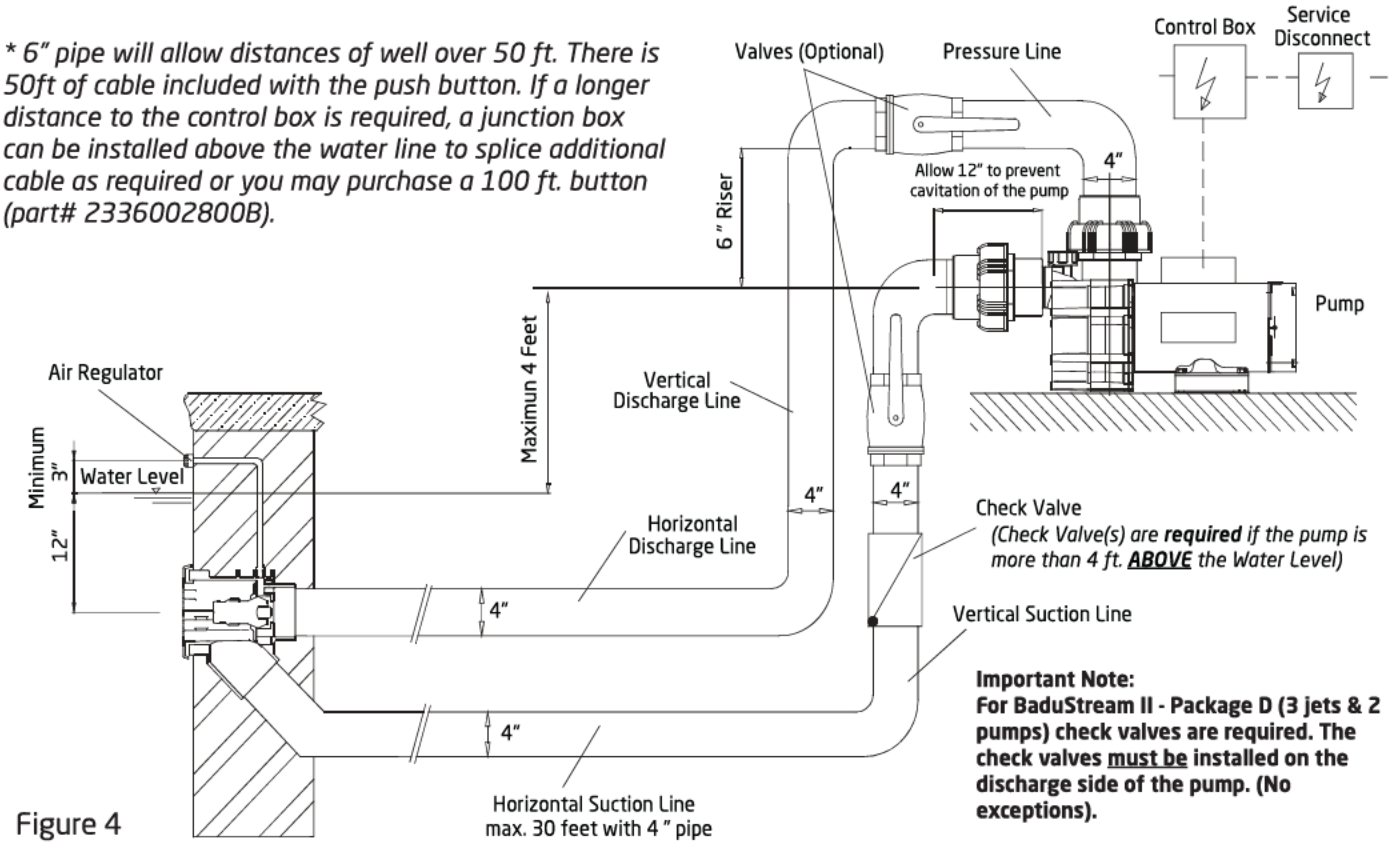

Figure 4

NOTE: Valves are recommended when pump is installed below water level (flooded suction applications).

NOTE: To avoid stress on the jet housing, the jet housing and 2 to 3 inches of plumbing stub out may be encased in gunite or concrete.

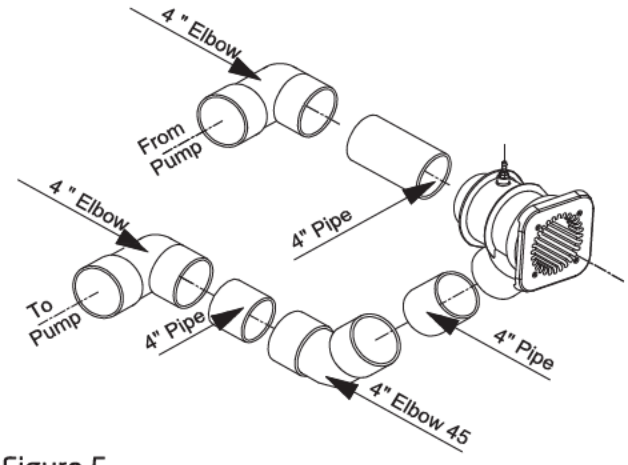

Figure 5
BaduStream ***Single*** Housing Installation



Plumbing Installation - continued

*NOTE: (For **Dual** Jet Installation) Increase the pipe size to 6" when jets are more than 30 ft. from the pump. Use 6" x 4" bushings after 4" manifold tees.*

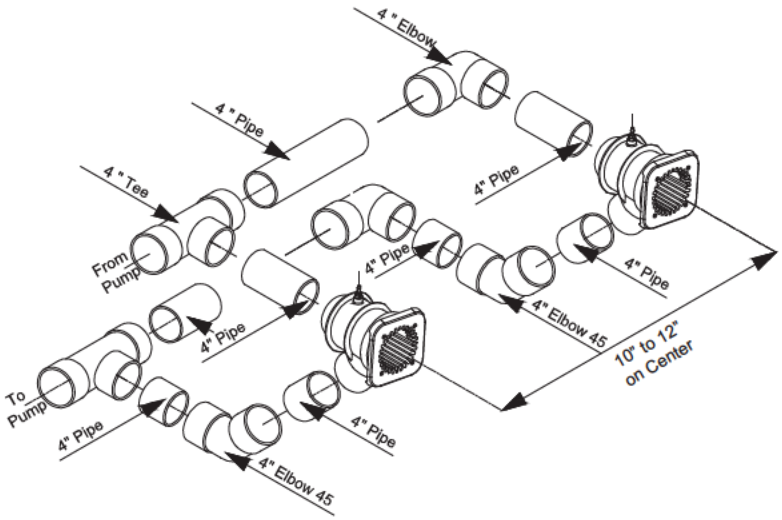



Figure 6
BaduStream ***Dual*** Housing Installation

Plumbing installation for the BaduStream ***Package D (system include three jet housings & two pumps)***

*NOTE: **(Three Jet Installation)** Increase the pipe size to 6" when jets are more than 30 ft. from the pump. Use 6" x 4" bushings after 4" manifold tees.*

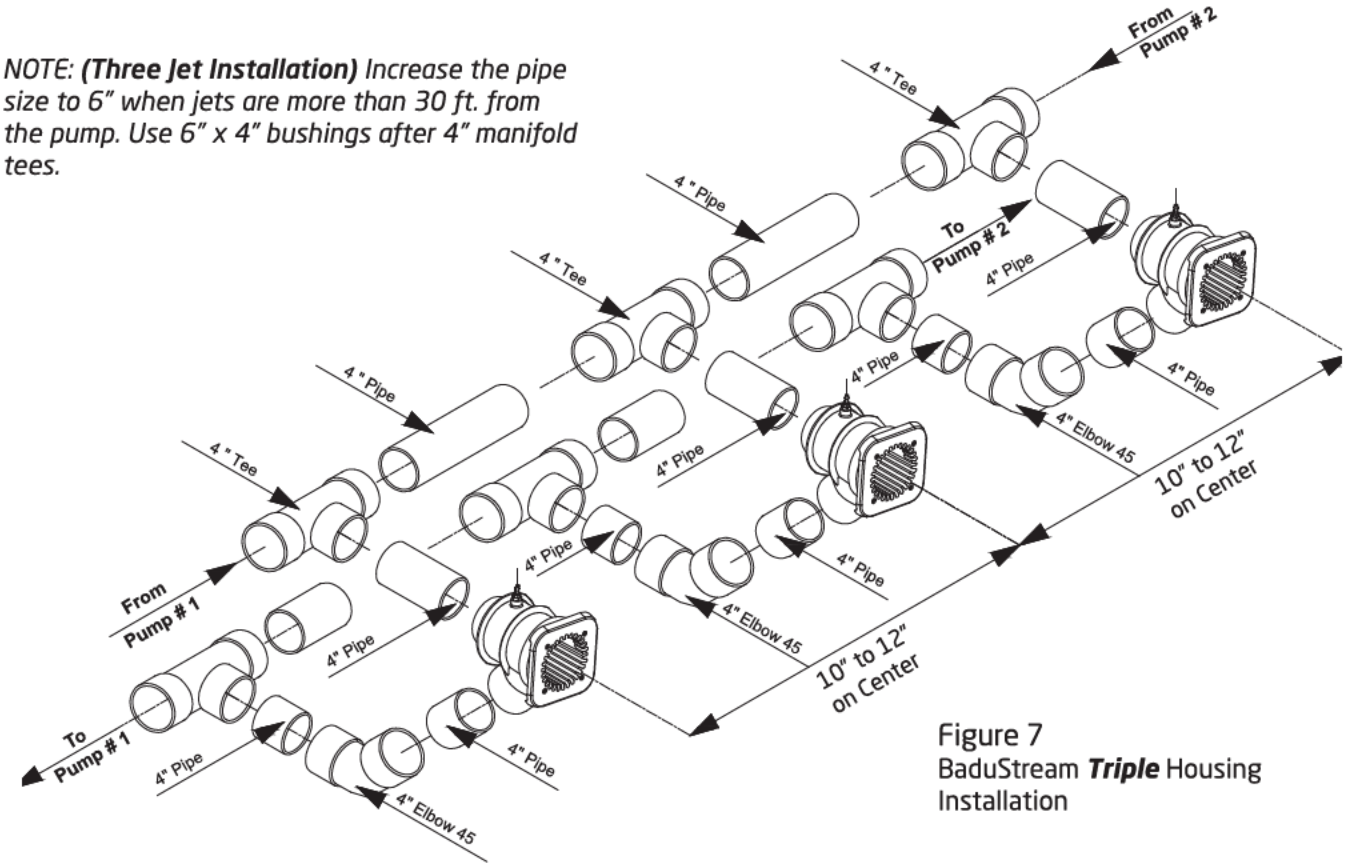

Figure 7
BaduStream ***Triple*** Housing Installation

*IMPORTANT NOTE: **CHECK VALVES <u>MUST BE</u>** used on the discharge side of each pump. Minimum 4" pipe between pump and BaduStream plumbing manifold.*

Plumbing Installation - continued





Figure 8
Check Valves Installed for a Package D (three jet & 2 pump system)

Concrete or Gunite Installation

*NOTE: The following parts **ARE NOT USED IN A GUNITE or CONCRETE INSTALLATION**:*

- Clamping Ring Gasket (*Part #12)*
- 1/4-20 x 1-1/2" Bolt (*Part #18)*
- 1/4-20 Nut (*Part # 19)*
- 1/4" Washer (*Part #20)*
- Air Regulator Gasket 60 x 11 x 2 mm (*Part #21)*
- #14 x 1" Screw (*Part #27)*

1. Pre-plumb BaduStream jet housing(s):

   A. Install plumbing manifold (for two and three jet systems) or approximately 12" of 4" SCH 40 pipe (for single jet systems) to both suction and discharge fittings on the jet housing(s). *See Figure 9*

   B. Thread one (1) air regulator hose nipple into the top of each jet housing. Secure plastic air regulator hose *(part #15)* to the air regulator hose nipple(s) *(part #14)* using the hose clamp(s) *(part #16)*.

2. Tape the jet housing(s) to keep concrete out of threaded inserts and out of the inside of the housing(s). *See Figure 10.*

3. Place the jet housing(s) between the steel rebar. ***Note: The jet housing location is very important.***

   A. Make sure that the air regulator hose nipple *(part #14)* is at the top and center of each jet housing. ***Failure to do so will result in the square cover (part #8) appearing uneven.***

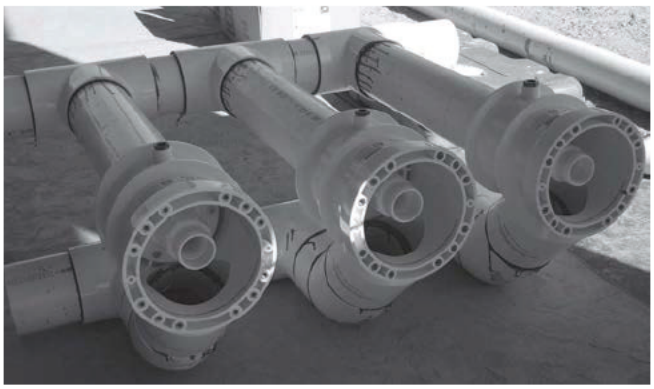

Figure 9
Pre-Plumbed Jet Housings



Figure 10
Taped Jet Housings

Concrete or Gunite Installation

B. The center of each jet housing *(the nozzle)* must be located **12" BELOW** the water line for maximum performance and efficiency.

C. Recheck the location of the jet housing while applying gunite or pouring concrete. Make sure the jet housing remains properly aligned and level.

D. Front edge of each jet housing should finish even with inside finished pool wall. Scrape out a V-shaped groove around the jet housing, approximately 1.5" deep to allow marcite to seal against the jet housing. *See Figure 11.*

E. To avoid stress on the housing, the jet housing and 2 to 3 inches of plumbing stub out may be encased in gunite or concrete. ***Caution:*** *Too much stress on the plumbing may crack the BaduStream II housing.*



Figure 11
V-Shaped Groove in Gunite

4. Install the air regulator. *NOTE: Air regulator location should be 3"- 4"* ***ABOVE*** *the water level.*

A. Thread one (1) air regulator hose nipple *(part #14)* into the back of the air regulator holder *(part #17).* Connect the free end of the plastic air regulator hose to the nipple on the back of the air regulator holder. Secure with a hose clamp *(part #16).*

B. The air regulator can be located in the tile above the water level or in the deck. When tiling the pool, adjust the air regulator location so it is 3"-4" **ABOVE** the water level. Place and set with hydraulic cement. The air regulator holder *(part #17)* should finish flush with the inner pool wall. Drill a 1/2" hole in the tile line even with the center hole of the air regulator holder. Tile over the air regulator holder. ***CAUTION:*** ***DO NOT*** *plug the center hole of the air regulator holder.*

C. Insert the M10 x 80 mm brass screw *(part #24)* through the bottom part of the air regulator *(part #23),* the 42 x 11 x 2 mm and the air regulator gasket *(part #26).* Thread the M10 x 80 mm brass screw into the center of the air regulator holder *(part #17).* Tighten with a flat head screw driver.

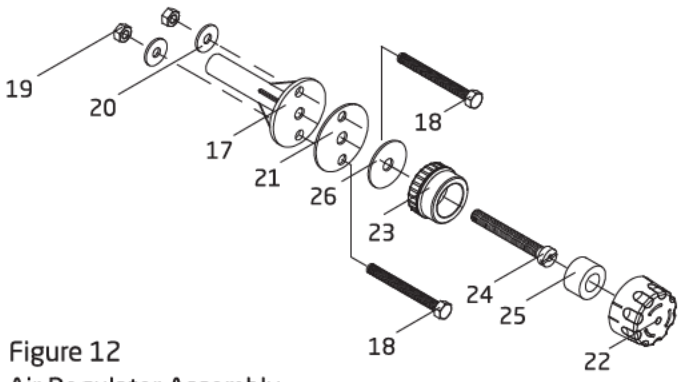

Figure 12
Air Regulator Assembly

D. Install the hose ring *(part #25)* and snap the top part of the air regulator *(part #22)* into place. *See Figure 12 for air regulator assembly.*

5. Keep all parts not being used now in original box. Store in a safe place until needed.

NOTE: An extension ring and longer square cover screws (part #9/5) are available (upon request) for applications where the housing is recessed into the pool wall.

6. Once the concrete or gunite is fully cured and pool wall is completed, install the square cover *(part #8)* using the four (4) M6 x 25mm square cover screws *(part #9/1).*

NOTE: In tile installations, the tile thickness can be compensated for by first installing the clamping ring gasket (part #12) and clamping ring (part #3) before installing the square cover. The clamping ring and clamping ring gasket are installed using the eight (8) clamping ring screws (part #9/2, 9/3, or 9/4).

Concrete or Gunite Installation - continued

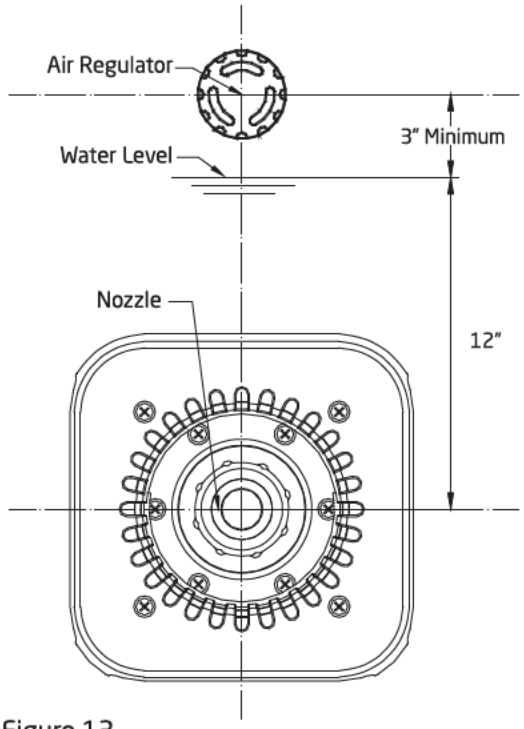

Figure 13
Installation in Concrete or Gunite Pools

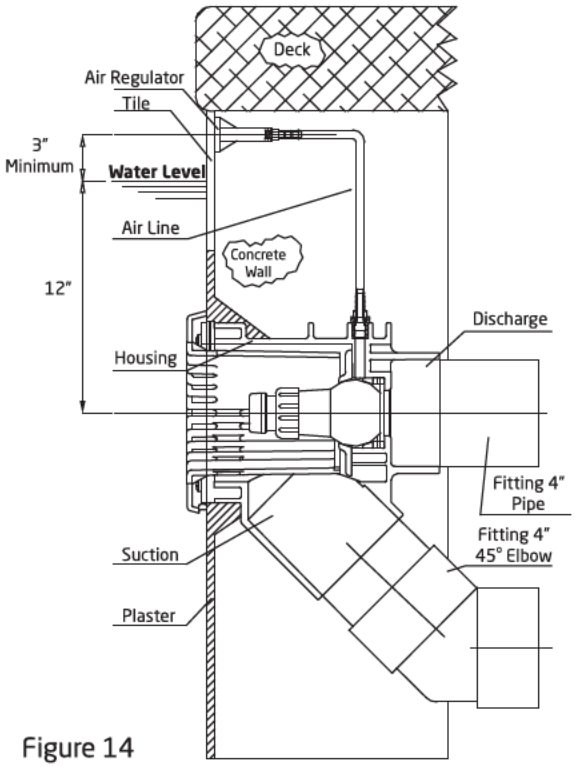

Figure 14
BaduStream in Concrete or Gunite Pool.

Liner and/or Fiberglass Pool Installation

1. Using the clamping ring *(part #3)* as a template, drill holes in the pool wall for installation. The center line of the clamping ring should be 12" **BELOW** the water level *(See Figures 15 & 16).* Two additional holes will need to be drilled at the 3 and 9 o'clock positions for installation of the jet housing *(part #7).* The four brass inserts in the clamping ring should be at the 2, 4, 8 and 10 o'clock positions *(See Figure 15).*

2. Mount the housing *(part #7)* and one clamping ring gasket *(part #12)* on **BEHIND** the pool wall using two (2) #14 x 1" counter sunk screws *(part #27).* Install the screws from the inside of the pool wall through the holes drilled at 3 and 9 o'clock positions. *(See Figure 15)*

3. Install the clamping ring *(part #3)* and a second clamping ring gasket *(part #12)* in **FRONT** of the pool wall using eight (8) M6 screws *(part # 9/2, 9/3, or 9/4).* Screw lengths vary depending on the installation. *NOTE: A good RTV silicone may be used with the gasket when mounting the jet housing, but in most cases is not necessary. Installer should decided whether or not the silicone is necessary.*

NOTE: When installed properly, the center of the housing (part #7) will be 12" **BELOW** the surface of the water and the air regulator hose nipple *(part #14)* will be at the top center of the jet housing.

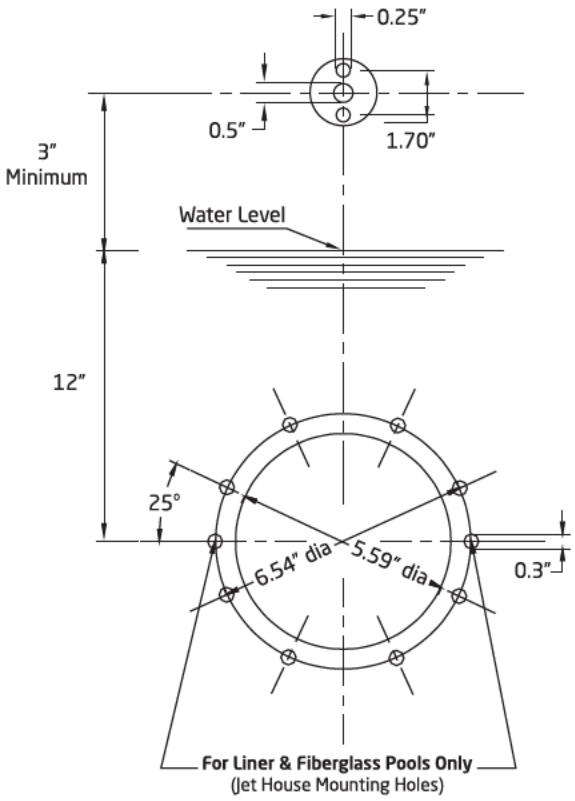

Figure 15
Cutout Pool Wall for BaduStream housing.

Liner and/or Fiberglass Pool Installation - continued

CAUTION: When installing the BaduStream Cover (part #8). Use a Phillips head screw driver and tighten to 1.5 Nm or hand tight. **DO NOT** use electrical or air drills. *(NOTE: The square cover, part #8, will have an uneven appearance if the housing is not installed properly.)*

4. For the air regulator assembly, one 1/2" hole must be provided, preferably along the vertical axis, approximately 3-4" **ABOVE** the water line. *(See Figures 15 & 16).* Using the 60 x 11 x 2mm air regulator gasket *(part #21)*, mark and drill two 1/4" mounting holes *(See Figure 15).* Use the two (2) 1/4 - 20 air holder screws *(part #18)* and two 1/4-20 air holder nuts *(part #19)* to mount the air regulator holder.

NOTE: Part #18 & Part #21 go in FRONT of the pool wall; Part #19 & Part #17 go BEHIND the pool wall.

5. Keep all parts not being used now in original box. Store in a safe place until needed.

6. Once the pool is complete, install the square cover *(part #8)* using the four (4) square cover screws *(part #9/1).*

For Liner Pools Only: Install the jet housing and air regulator prior to installation or replacement of the pool liner.

For Steel Walled Pools: An optional butterfly gasket *(part #12.1)* maybe purchased to replace the two (2)clamping ring gaskets *(part #12)*. Increase the jet housing hole in Figure 15 from 5.59" to 5.75" for installation.

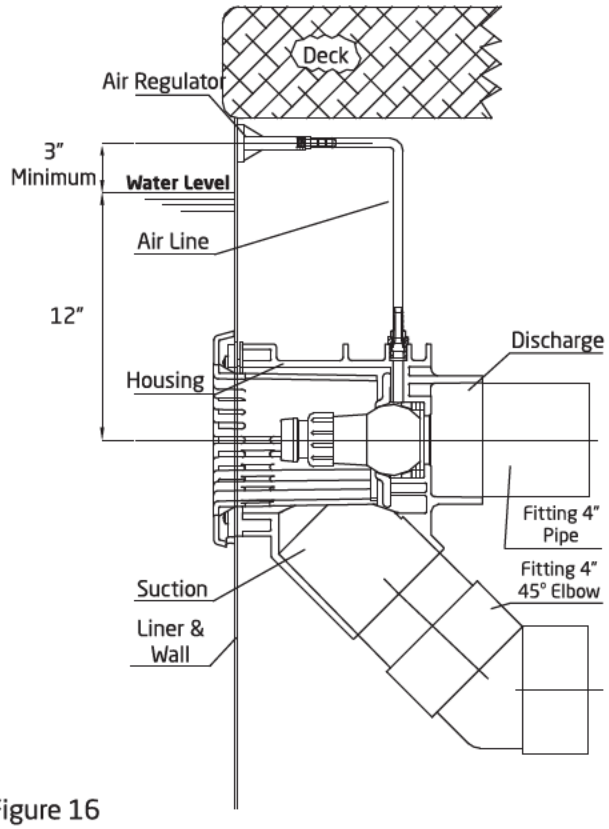

Figure 16
BaduStream in Liner or Fiberglass Pool.

Removal of Liner

When replacing liner or removing liner for repairs; remove the four (4) screws *(part #9/1)* which hold the square cover *(part #8)* to the jet housing. Remove all screws *(part #9/2, 9/3 & 9/4)* except the top two, which hold the clamping ring *(part #3)* and gasket *(part #12)* to the jet housing. Back out the two remaining screws approximately halfway and check for any movement of the jet housing from the wall. *(NOTE: If the two counter sunk screws (part #27) which hold the jet housing to the wall were installed, the jet housing should not move, and the two remaining screws can be removed.)* Remove one of the remaining two screws and slide the clamping ring *(part #3)* to the side. Replace all the screws before removing the last screw. Remove or replace the liner. Reverse the process to install liner.

NOTE: When replacing the clamping ring and screws: locate screw heads under liner, make a small cut on the liner at the screw heads and push the liner over the screw head.

Electrical - SPECK Controller Installation

WARNING: *The wiring of the pool motor and control box should be done by a licensed electrician in accordance with all local, state, and federal codes. Be certain that the motor frame and control box are properly grounded. Motor name plate lists voltage, phase, amp draw, and other information as well as wiring connection instructions.*

This section concerns the electric motor and control box for BaduStream II swimjet system.

CAUTION: *Before installing the Speck Pump, read the entire pump owner's manual found in the pump box.*

Consult local codes for minimum distance between pump and pool. Locate pump as close to the pool as practical.

CAUTION: *There is 50ft of cable included with the push button. If a longer distance to the control box is required, a junction box can be installed above the water line to splice additional cable as required or you may purchase a 100 ft. button (part# 2336002800B).*

NOTE: The System ON/OFF LED push button is installed in a 1-1/2" threaded housing. This housing may be installed in any 1-1/2" return fitting, either below the water line or above the water.

BONDING: As required by National Electrical Code, the pump motor must be electrically bonded to the pool structure (reinforced bars, etc.) by a solid copper conductor not smaller than No. 8 AWG via the external copper bonding lug on the pump motor.

GROUNDING: Permanently ground the pump motor and control box using a conductor of appropriate size.

- **Pump Motor:** Connect to the #10 green headed ground screw provided inside the motor terminal box.
- **Control Box:** Connect to the aluminum grounding terminal strip on the inside of the control box enclosure.

CAUTION: ***DO NOT*** *connect to electric power supply until the unit is permanently grounded.*

NOTE: Single phase control boxes equipped with GFCI are shown on pages 17-18. Other options are available. Please contact the factory (800) 223-8538 for assistance.

Connecting the SPECK controller to a WiFi network for the FIRST TIME:

1. Before connecting the SPECK controller to the WiFi network, stand where the SPECK equipment is located and with your mobile device in-hand assure that the signal strength to the WiFi network is good to excellent *(weak signals will cause problems).*

2. Make sure the power to the SPECK Device is turned ON. There is a green indicator on the controller board to indicate power. A small "o" will be flashing on the LED display.

3. Give the homeowner the BADU*Connect* app manual and allow them to finish the App setup. *For more information, Call (800) 223-8538 or visit www.baduconnect.com for additional copies of the BADUConnect App instructions.*

Figure 17
Control Box Wiring

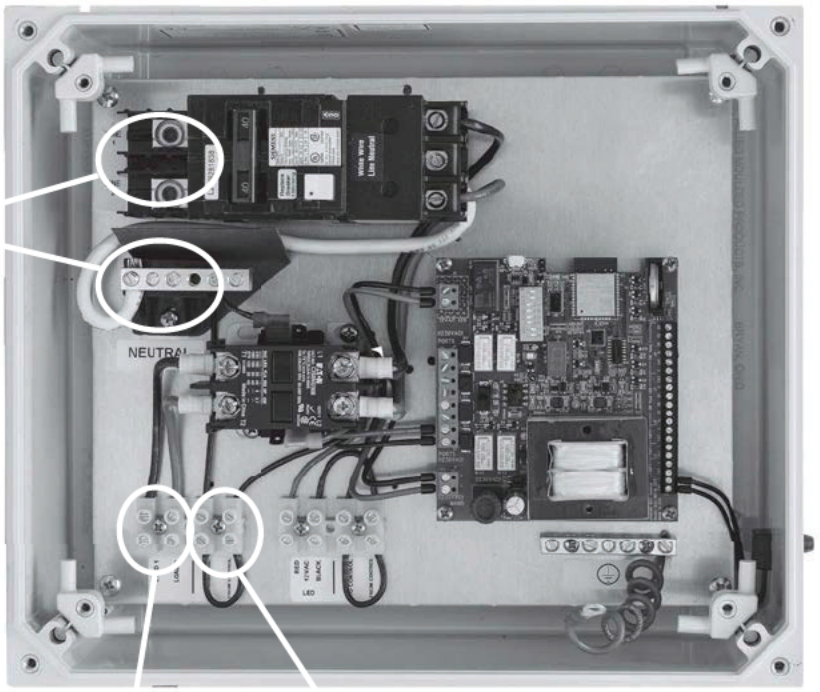

Contact MFG for wiring instructions.

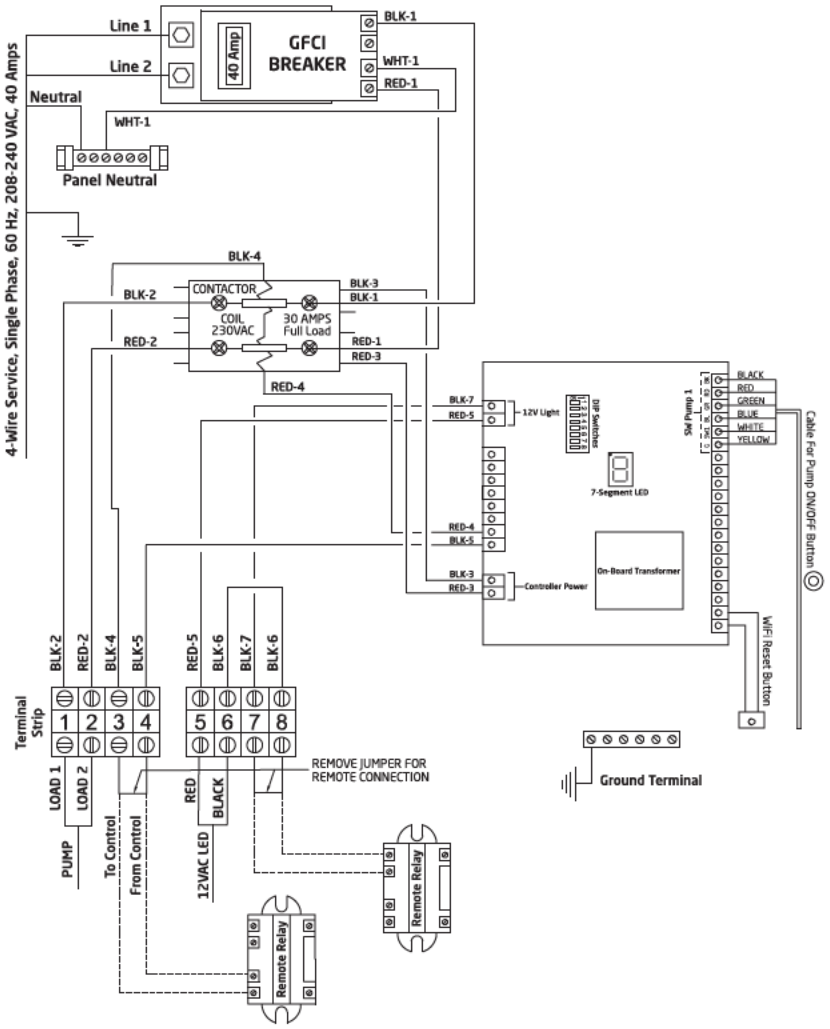

Figure 17A
Control Box Wiring

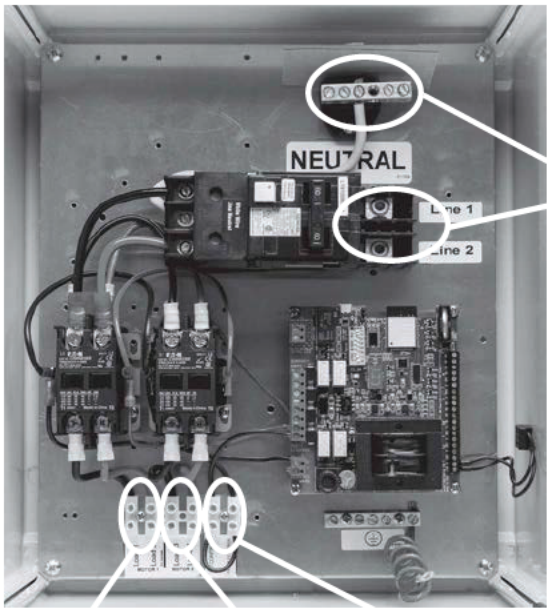

Power from main panel (230 VAC):
Neutral, Line 1, Line 2

Power to pump motor 1
(230 VAC): Load 1, Load 2

Power to pump motor 2
(230 VAC): Load 3, Load 4

Connection to remote relay
(120 VAC)
Contact MFG for wiring instructions.

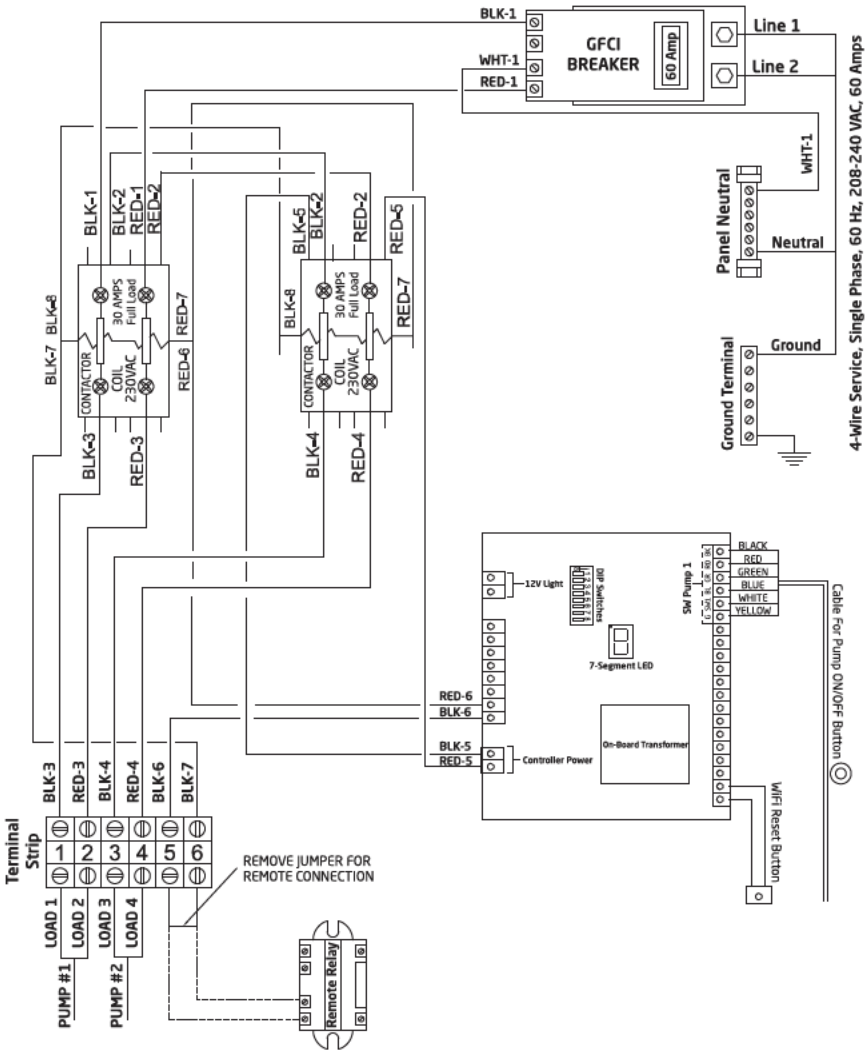

Table 1
LED Push Button Color Codes

COLOR	MEANING
Solid BLUE	SwimJet System is OFF
Flashing GREEN every 1 second	SwimJet System is ON with 2 hour timer
Flashing GREEN every 1/2 second	This is a 2 minute warning on the 2 hour timer. Once the 2 minutes have passed the swimjet system will automatically turn OFF.

Table 2
LED Codes & Meanings

PATTERN ON LED DISPLAY	CONDITION
Flashing Dash (-) with an interval of ~200ms	Ideal with no Relay/Pump on
Flashing 'P' with the interval of ~200ms	No WiFi connection, Wrong Wifi Password
Flashing 'O' (Capital O) with an interval of ~200ms	No cloud connection due to server down or no internet
Flashing 'o' (Small o) with an interval of 200ms	Device has not been set up to connect to WiFi
Flashing '≡' (triple bars) with an interval of 200ms	The device is doing OTA Firmware update
Flashing 'E' with an interval of ~200ms	Hardware error
Flashing 'L' with an interval of ~200ms	Pool light error
Steady 2	Port 2 is on manually (No Timer/Schedule)
Steady 3	Port 3 is on manually (No Timer/Schedule)
Steady 4	Port 4 is on manually (No Timer/Schedule)
Steady 5	Port 5 is on manually (No Timer/Schedule)
Steady 1 with flashing dot. The dot will flash with an interval of ~100ms	Port 1 is on a schedule based on Time of Day.
Steady 2 with flashing dot. The dot will flash with an interval of ~100ms	Port 2 is on a schedule based on Time of Day.
Steady 3 with flashing dot. The dot will flash with an interval of ~100ms	Port 3 is on a schedule based on Time of Day.
Steady 4 with flashing dot. The dot will flash with an interval of ~100ms	Port 4 is on a schedule based on Time of Day.
Steady 5 with flashing dot. The dot will flash with an interval of ~100ms	Port 5 is on a schedule based on Time of Day.
Flashing 1 with the interval of ~100ms	Port 1 is on a countdown timer
Flashing 2 with the interval of ~100ms	Port 2 is on a countdown timer
Flashing 3 with the interval of ~100ms	Port 3 is on a countdown timer
Flashing 4 with the interval of ~100ms	Port 4 is on a countdown timer
Flashing 5 with the interval of ~100ms	Port 5 is on a countdown timer
Blue light is ON	LED Push Button: When Port 1 or 2 is OFF
Green-light is ON	LED Push Button: When Port 2 is ON in manual mode
Green light is Flashing 1 second interval flashing when time remaining is more than 2 minutes otherwise flashes with 0.5 second	LED Push Button: When Port 1 or 2 is ON in Timer or schedular mode
Red light is flashing	LED Push Button: When there is an error with the Swimjet Light (Port 2)

4 Service and Maintenance

Nozzle Adjustment

The BaduStream System is provided with a set of nozzle adjustment tools. These tools will allow the user to set the jet nozzles into position for optimum performance.

When setting the nozzles for basic swimming, it is recommended that you set the nozzles in such a way that each nozzle intersects 4 feet away while breaking the surface at the same time. To help set the nozzles in position for best performance, please follow these instructions:

2 Jet System:
1. Extend the nozzle adjustment tool to full length.

2. Place one nozzle adjustment tool into the center jet nozzle, bring the blue nozzle tool so it is straight out and tilted up, so the end of the tool breaks the surface of the water and leave tool in the jet.*(See Figure 16)*

3 Jet System:
1. Extend the nozzle adjustment tool to full length.

2. Place one nozzle adjustment tool into the center jet nozzle, bring the blue nozzle tool so it is straight out and tilted up, so the end of the tool breaks the surface of the water and leave tool in the jet. *(See Figure 16A)*

3. Place the second tool in the left side jet, move the tool so that the end touches the end of the tool left in the center jet where it breaks the surface of the water.

4. Repeat step 3 for the right-side jet using the same tool used on the left jet.



Nozzle Adjustment Tools

NOTE: Though the nozzle adjustment tools are designed for outdoor use, it is advised to protect them from continuous direct heat.

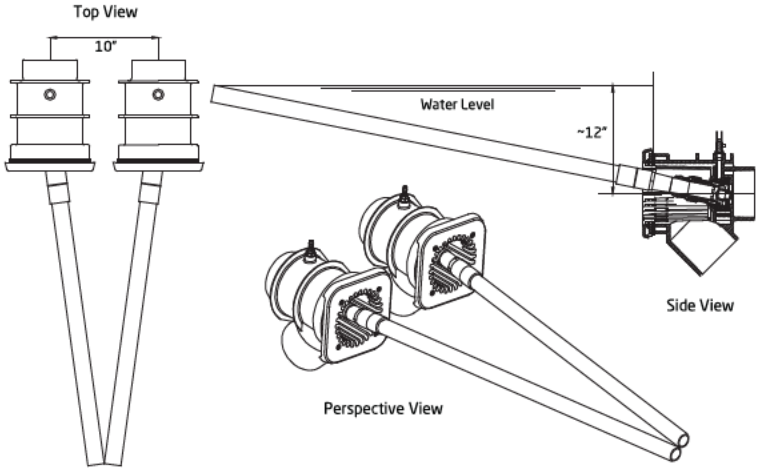

Figure 16
2 Jet System Nozzle Adjustment

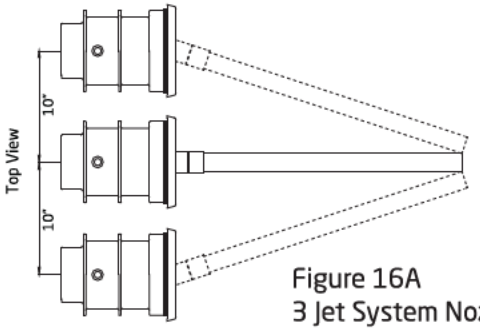

Figure 16A
3 Jet System Nozzle Adjustment

Winterizing

In areas subject to freezing water temperatures, you should protect your equipment. We recommend you purchase a winter cover kit part #2308752006K. This kit includes one (1) winter plate, one (1) gasket and four (4) screws.

Also, you can protect your swimjet system as follows: Drain pool until water level has dropped below the anti-entrapment cover. Then protect pump by removing drain plug and red filler plug (or lid).

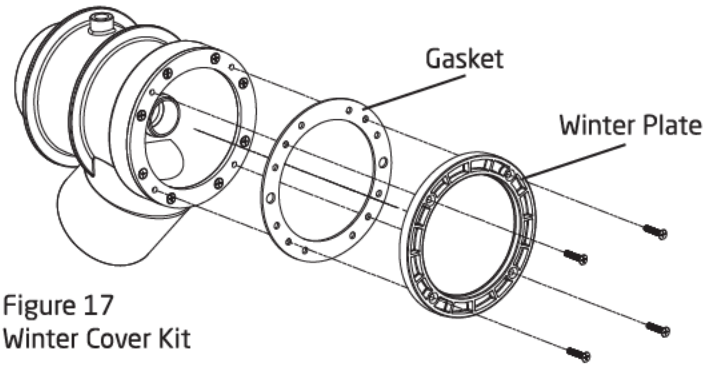

Figure 17
Winter Cover Kit

5 Frequently Asked Questions

How is the current generated?
The pump generates up to 400 GPM coming out of two (2) jet nozzles at 27 ft. per second and 36 ft. per second thru one (1) nozzle creating a swim current in excess of 5700 GPM, measured 6 ft. from the jet.

What size pool do I need?
The BaduStream can be installed in any size pool. However, we recommend a minimum length of 15 ft. and a minimum width of a 8 ft. swimming lane.

What size plumbing is necessary? How far away from the BaduStream can the pump be installed?
Use 4" plumbing up to 30 ft. For runs longer that 30 ft. use 6" plumbing. The pump should be placed as close to the BaduStream as local codes will allow. See plumbing installation on page 8 for more details.

How many amps does the pump operate at?
4.0 HP: Maximum 21.0 - 19.4 amps @ 208-230 V
3.5 HP: Maximum 15.2 - 14.0 amps @ 208-230 V

What size breaker do I need?
You must use a 40 amp breaker for the 4 HP pump or 30 amp breaker for the 3 HP pump to avoid nuisance tripping. A 60 amp breaker is required for three jets and two pumps system.

Is the BaduStream approved?
Yes. The BaduStream swim jet system is listed by MET, UL and complies with UL standard 1563 Swimming Pool Equipment, ASME standard A*NSI/ASME A112.19.8 (ANSI/APSP-16, 2011)* Standard for Swim Jet Combination Fittings, and is VGB 2008 compliant.

Do the covers come in different colors?
Yes. The round covers can be ordered in gray or black. The square cover is only available in black or white.

Does the air regulator come in different colors?
Yes. The air regulator can be ordered in black.

Does it matter if the housing is installed higher or lower than the manual states?
Yes, the center of the jet must be 12" **BELOW** estimated water level for proper performance of unit.

Can the air regulator be placed elsewhere?
Yes, as long as it is not continuously flooded with water.

Can the pump be placed below water level?
Yes. However, for best performance we recommend ordering a pump for flooded suction (Model 21-80/33G) instead of self-priming (Model 21-80/33GS). We recommend installing valves for ease of maintenance.

How far away can the LED push button function properly?
The LED push button will work as far as needed. However, only 50 ft. of cable is provided. Larger runs will require splicing at a junction box or purchasing the 100' cable button.

Do I need to install a motor starter?
In most case, no. All single phase pumps have built-in thermal overloads. Also, the three phase Model 21-80/33 has built-in thermal overload. Other three phase pumps require a motor starter.

Should this be tied into my filter system?
No. The swim jet system and the filter system should not be plumbed together as they each provide very specific functions.

Can I use with automated controls?
Yes. It comes with the ability to tie into automated control systems or other switching devices.

Trouble Shooting

PROBLEM	POSSIBLE CAUSES	SOLUTION
1. Pump will not prime.	a. Suction air leak.	Make sure the red filler plug and o-ring are clean and properly positioned. Tighten red filler plug. Tighten all pipes and fittings on suction side of the pump. Be sure water in the pool is high enough to flow through the jet housing.
	b. No water in pump.	Make sure pump housing is full of water.
	c. Closed valves or blocked lines.	Open all valves in system. Open pump and check for clogging of impeller.
	d. Low voltage to motor.	Check voltage at motor. If low, pump will not come up to speed.
2. Motor does not turn.	a. No power to motor.	Check that all power switches are on. Be sure fuse or circuit breaker is properly set. Check motor wiring at terminals.
	b. Pump jammed.	With power off, turn shaft. It should spin freely. If not, disassemble and repair.
3. Low flow.	a. No water in pump.	See problem 1.
	b. Closed valves or blocked lines.	
	c. Low voltage to motor	
4. Noisy operation of motor.	a. Bad bearings.	Check for noise when shaft is turned by hand. Motor will be very hot in bearing area when running. Replace bearing.
5. Motor runs hot.	These motors will run hot to the touch, however, this is normal. They are designed that way. Thermal overload protector will function to turn them off if there is an overload or high temperature problem. Excessive heat can be caused by:	
	a. Low voltage.	Increase size of electrical wire. Be sure motor is operating on correct voltage.
	b. Installed in direct sun.	Shield motor from sun's rays.
	c. Poor ventilation.	**DO NOT** block motor ventilation openings.
6. Noisy operation of pump.	a. Air leak in suction line.	Repair leak. Check suction pipe, red filler plug, and o-ring (See Problem 1).
	b. Restricted suction line due to blockage or under size pipe. Indicated by high vacuum reading at pump suction.	Remove blockage or increase suction pipe size. Are all suction valves fully open?
	c. Foreign matter (gravel, metal, etc.) in pump impeller.	Disassemble pump and remove foreign matter from impeller.
	d. Cavitation.	Improve suction conditions. (Reduce suction line length, reduce number of fittings, increase pipe size.)

Trouble Shooting - continued

PROBLEM	POSSIBLE CAUSES	SOLUTION
7. Motor overload protection "kicks out".	a. Motor is not connected properly.	Check wiring diagram on motor.
	b. Low voltage due to under size wire or low incoming voltage.	Check with volt meter. Increase size of supply wire. Report low supply voltage to power company. Voltage at motor must be within 10% of motor nameplate voltage.
	c. Wrong size heaters in protective device.	Heaters should be one size larger than full load amps shown on motor nameplate.
	d. Overload due to binding in pump or wrong size impeller.	Indicated by high amperage readings on motor, binding shaft. Disassemble unit and correct.
8. My ON/OFF LED push button is not working properly?	a. Control Box.	Check GFCI. If green LED does not stay ON, contact a certified electrician to diagnose control box components.
	b. Wiring.	Check the LED push button connections on the control box. Make sure the connections are tight.
9. The system will not turn OFF?	a. Control Box Components.	Press TEST button on the control box GFCI to turn off system. Contact a certified electrician to diagnose control box components.
10. I have adjusted the nozzles but the flow is weak?	a. Debris in pump casing/impeller.	Check inside pump casing for any debris.
	b. Improper swim jet assembly.	The internals may need to be removed for inspection.
11. The plastic cover is cracked.		To order contact the factory at 800-223-8538.

6 Product Specification

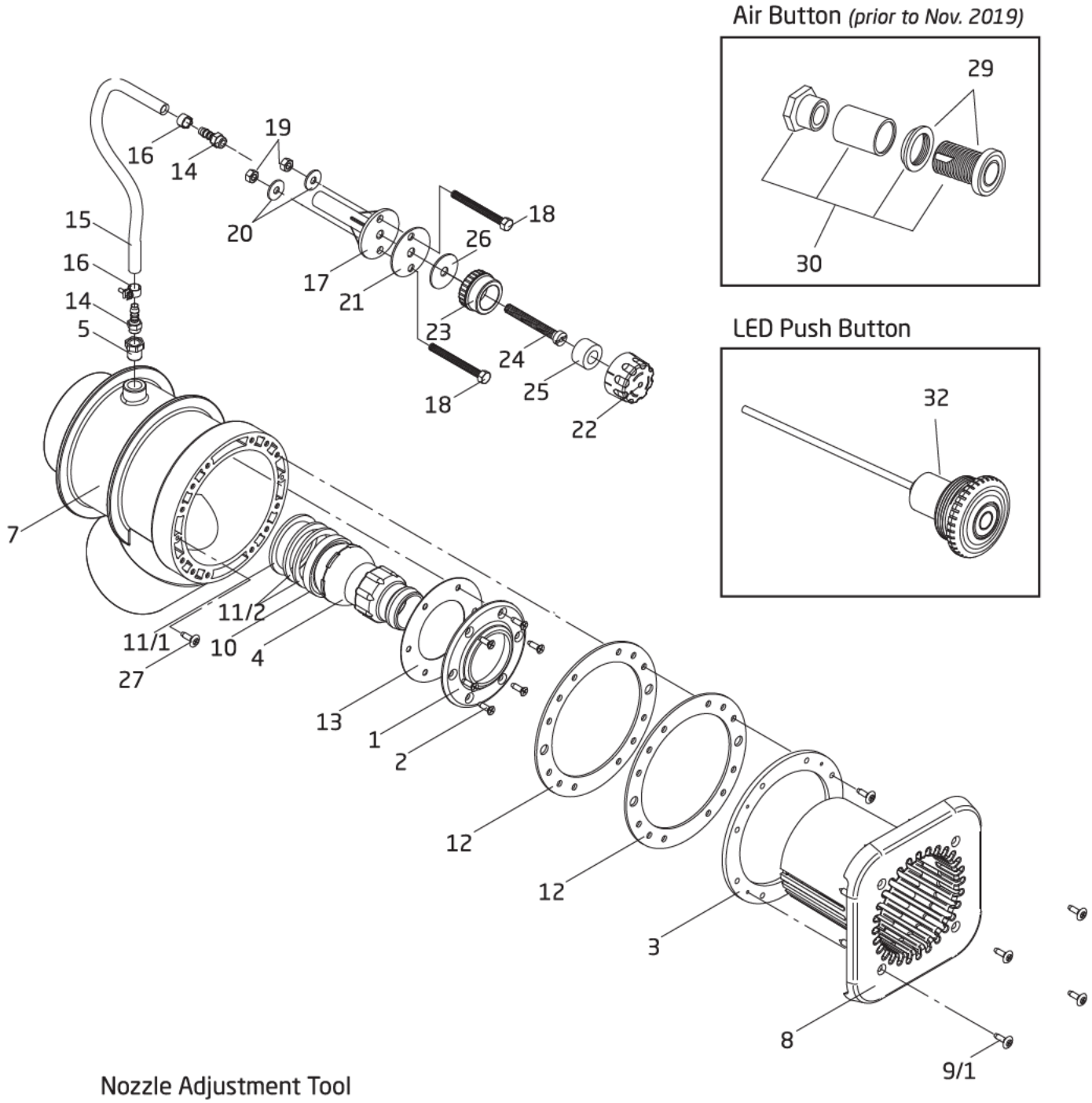

Replacement Parts

Order#	Drawing #	Qty Required	Description
2306002009	1	1	Face Ring - Nozzle
5879006021	2	6	Thread Cutting Screw - Face Ring K60 x 20 A2
2308762004	3	1	Ring - Clamping
2302002857	4	1	Nozzle - Adjustable Flow 40mm
2308761001A	5 & 7	1	Housing w/ Bushing Reducer 16 x 1/4"
2308750003	8	1	Cover - Square White
5879650625	9/1	4	Screw - Square Cover, Phillips/Pan M6 x 25mm
2991000077	9/2	8	Screw - Clamping Ring, Phillips Flat Head M6 x 20mm
5879650625	9/3	8	Screw - Clamping Ring, Phillips/ Pan M6 x 25mm
5879650640	9/4	8	Screw - Clamping Ring, Phillips/ Pan M6 x 40mm
2991000038	9/5	4	Screw - Sq.cover (Ext. Ring) Slot/ Pan M6 x 45mm
2302002056	10	1	Seat - Nozzle
2302002057	11/1	1	Spacer - Nozzle 6.2mm
2302002157	11/2	2	Spacer - Nozzle 4.0mm
2308750005	12	2	Gasket - Clamping Ring
2306002013	13	1	Gasket - Face Ring
2303004000	14-21	1	Holder w/ Hose Subassembly
2301001005	14	2	Nipple - Hose, Air Regulator, Plastic 1/4"
2301001007	15	1	Hose - Air Regulator, Plastic 8 x 3mm *(for single or three jet system)*
2301004001	15	1	Hose - w/ Y Fitting, Plastic 8 x 3mm *(for two jet system)*
2301001008	16	2	Clamp - Hose, Air Regulator 14/9 SS A4
2301001009	17	1	Holder - Air Regulator
2991000049	18	2	Screw - Air Holder, Slot/Pan 1/4-20 x 1-1/2"
2991000052	19	2	Nut - Air Holder, Hex Nut 1/4-20 SS
2991400024	20	2	Washer - Air Holder 1/4" SS
2301001013	21	1	Gasket - Air Holder 60 x 11 x 2mm
2301002000	22-26	1	Air Regulator (Sub-Assembly Complete) - White
2301002021	22	1	Top Part - Air Regulator - White
2301002022	23	1	Bottom Part - Air Regulator - White
2301002023	24	1	Screw w/ Hole - Air Regulator, Brass M10 x 80
2301002024	25	1	Ring - Hose, Air Regulator 16 x 30 x 18mm
2301002025	26	1	Gasket - Air Regulator 42 x 11 x 2mm
2991000059	27	2	Thread Cutting Screw - Jet Housing, Phillips/Pan 14 x 1
2304910010	Not Shown	1	Ring - Extension, Jet Housing (Flange)
2336002800A	32	1	50 ft. LED Push Button CPL - Pump

Order#	Drawing #	Qty Required	Description
2920280740	Not Shown	1	Control Box - BJC-7-GFCI-WIFI+CPB
2920280739	Not Shown	1	Control Box - BJC-7-GFCI-P2J3-WIFI+CP

Parts Below Are Unique to the BaduStream Shipped Prior to 11/2019

7400000026	29	1	#10 Air Button
7400000027	Not Shown	1	Air Tube 1/8" x 1' *(Price per ft) (50' needed)*
7400000062	30	1	Air Button w/ Concrete Adaptor

Optional Parts

2308752006K	Not Shown	1	Winter Cover Kit - Cover, Gasket & 4 Screws
2308750003B	8.1	1	Cover - Square Black
2308760004	Not Shown	1	Cover - Round White
2308760004B	Not Shown	1	Cover - Round Black
2308760004G	Not Shown	1	Cover - Round Gray
2301002000B	22.1 - 26	1	Air Regulator (Sub-Assembly Complete) - Black
2301002029	22.1	1	Top Part - Air Regulator - Black
2301002028	23.1	1	Bottom Part - Air Regulator - Black
2308750006	Not Shown	1	Butterfly Gasket - Clamping Ring
2300022010	Not Shown	1	Cap - Nozzle & Hand Grip, Close Off
2300003010	Not Shown	1	Massage Hose 5 ft. w/Pulsator & Hand Grip
2300003310	Not Shown	1	Massage Hose 15 ft. w/ Pulsator & Hand Grip
2308799007	31	1	Kit - Nozzle Adjustment Tool
2336002800B	32	1	100 ft. LED Push Button CPL - Pump

7 Limited Warranty

Product Registration

Thank you for purchasing a SPECK PUMPS® product please take a few moments to register it online. Your registration helps us keep you up to date on product information and offers.

Before you register:
What do I need to get started?

- The Serial Number and the Model Name
- An email address. We will use this to send you confirmation of your registration.
- A copy of your sales receipt and/or qualified installer's invoice.

To register your SPECK equipment please register online at www.usa.speck-pumps.com/register/

or

Scan QR code to register product

Limited Warranty

Speck Pumps-Pool Products, Inc. grants solely to the original consumer purchaser ("Buyer") of the BADU® SwimJet System(s)the following personal, non-transferable and limited warranty on the following terms and conditions (the "Limited Warranty"): the BADU SwimJet System(s) is warranted to be free of material defects in materials or workmanship under normal use for a period of one (1) year beginning on the date of the Buyer's purchase of the BADU SwimJet System(s) (the "Limited Warranty Period"). Not withstanding any provisions herein to the contrary, the warranties and obligations hereunder shall not in any event extend for more than two (2) years beyond the date of shipment of the BADU SwimJet System(s) from the factory (the "Limited Warranty Period"). The Limited Warranty is subject to each of the following additional terms and conditions:

1. **IN THE EVENT OF ANY BREACH OF THE LIMITED WARRANTY, SPECK PUMPS-POOL PRODUCTS, INC.'S ENTIRE OBLIGATION AND LIABILITY TO BUYER, AND BUYER'S SOLE AND EXCLUSIVE REMEDY SHALL BE AS FOLLOWS:** Speck Pumps-Pool Products, Inc. will, at its option, either repair or replace the BADU SwimJet System(s) or refund to Buyer the purchase price actually paid by Buyer for the BADU SwimJet System(s) subject to the Limited Warranty. Speck Pumps-Pool Products, Inc. shall have no obligations under the Limited Warranty unless Buyer delivers timely written notice to Speck Pumps-Pool Products, Inc. of the Limited Warranty claim within the Limited Warranty Period and returns the BADU SwimJet System(s) to Speck Pumps-Pool Products, Inc. if requested. To the fullest extent permitted by law, Speck Pumps-Pool Products, Inc. expressly disclaims any liability for, and the Limited Warranty does not include or cover, any labor, costs or other expenses in connection with the removal, transportation, shipment, insurance, replacement, repair, or installation of repaired or replaced parts or for any other costs or expenses or damages to property or things including, but not limited to, those arising in connection with the use of, or inability to use, the BADU SwimJet System(s).

2. To the fullest extent permitted by law, the Limited Warranty will be void and of no force or effect and Speck Pumps-Pool Products, Inc. will have no liability, responsibilities or obligations to Buyer or with respect to the BADU SwimJet System(s) in the event of the occurrence of any one or more of the following:

(a) Any damage to the BADU SwimJet System(s) caused by Buyer, any third party, ground movement, other natural forces, acts of God or any other sources or causes not arising from a breach of the Limited Warranty, excluding ordinary wear and tear;

(b) Any replacement, modification, alteration or repair of any parts or components of the BADU SwimJet System(s) by anyone other than Speck Pumps-Pool Products, Inc.;

(c) Any abuse, misuse, accident, tampering with, improper installation or modification of the BADU SwimJet System(s) or any other actions, inactions or failures to act that violate the terms and conditions of this Limited Warranty;

(d) Buyer's failure or inability to present an invoice, bill, receipt or other documentation clearly evidencing that the BADU SwimJet System(s) was installed and maintained in strict compliance with this Limited Warranty and that the claim was timely submitted within the Limited Warranty Period; and/or

(e) Buyer's failure to comply with the conditions and contingencies set forth in paragraph 3 below.

3. The Limited Warranty is expressly conditioned and contingent upon Buyer's strict compliance with each of the following:

(a) Installation of the BADU SwimJet System(s) by an experienced and qualified pool industry professional and a licensed electrician who is licensed within the jurisdiction in which the BADU SwimJet System(s) is installed and will be used; and

(b) Buyer's operation and maintenance of the BADU SwimJet System(s) in strict accordance with Speck Pumps-Pool Products, Inc.'s printed operator/maintenance manuals delivered with the BADU SwimJet System(s).

4. **DISCLAIMER: THE LIMITED WARRANTY IS THE ONLY WARRANTY MADE AND IS IN LIEU OF ALL OTHER WARRANTIES, AND ANY AND ALL IMPLIED WARRANTY OR CONDITION OF MERCHANTABILITY, THE IMPLIED WARRANTY AGAINST INFRINGEMENT, AND THE IMPLIED WARRANTY OR CONDITION OF FITNESS FOR A PARTICULAR PURPOSE ARE EXPRESSLY LIMITED IN THEIR SCOPE AND DURATION TO THE ONE YEAR TERM OF THE LIMITED WARRANTY SET FORTH HEREIN. SOME STATES DO NOT ALLOW LIMITATIONS ON HOW LONG AN IMPLIED WARRANTY LASTS, SO THE ABOVE LIMITATION MAY NOT APPLY TO THE BUYER.**

5. **TO THE FULLEST EXTENT PERMITTED BY LAW, IN NO EVENT SHALL SPECK PUMPS-POOL PRODUCTS, INC. OR ITS OFFICERS, DIRECTORS, EMPLOYEES, SHAREHOLDERS, AGENTS, OR REPRESENTATIVES BE LIABLE FOR ANY SPECIAL, INDIRECT, INCIDENTAL, EXEMPLARY OR CONSEQUENTIAL DAMAGES OR LOSS, INCLUDING TIME, MONEY, GOODWILL, AND LOST PROFITS IN ANY WAY WHICH MAY ARISE HEREUNDER OR FROM THE USE OF OR INABILITY TO USE THE BADU SWIMJET SYSTEM(S) OR THE PERFORMANCE OR NONPERFORMANCE OF ANY OBLIGATION UNDER THIS LIMITED WARRANTY. THIS PARAGRAPH, THE WARRANTY DISCLAIMERS IN PARAGRAPH 4 ABOVE, AND THE SOLE AND EXCLUSIVE REMEDY SET FORTH IN PARAGRAPH 1 ABOVE SHALL APPLY EVEN IF SPECK PUMPS-POOL PRODUCTS, INC. HAS BEEN NOTIFIED OF THE POSSIBILITY OR LIKELIHOOD OF SUCH DAMAGES OCCURRING, WHETHER SUCH LIABILITY IS BASED ON CONTRACT, TORT, NEGLIGENCE, STRICT LIABILITY, PRODUCTS LIABILITY OR OTHERWISE, AND EVEN IF ANY REMEDY STATED HEREIN FAILS OF ITS ESSENTIAL PURPOSE. SOME STATES DO NOT ALLOW THE EXCLUSION OR LIMITATION OF SPECIAL, INDIRECT, INCIDENTAL, EXEMPLARY OR CONSEQUENTIAL DAMAGES OR LOSS, SO THE ABOVE EXCLUSIONS AND LIMITATIONS MAY NOT APPLY.**

6. This Limited Warranty gives the Buyer specific legal rights, and the Buyer may also have other rights, which vary from state to state.

7. A return merchandise authorization ("RMA") must be obtained from Speck Pumps-Pool Products, Inc. before returning any product. Products returned without an RMA will be refused and returned, unopened, to the Buyer. All returned products are to be sent freight prepaid and insured for Buyer's protection to the manufacturer at 8125 Bayberry Road, Jacksonville, Florida 32256 USA. Under no condition will products be accepted after the expiration of the Limited Warranty Period. Speck Pumps-Pool Products, Inc. shall not bear any costs or risks incurred by Buyer in shipping a defective BADU SwimJet System(s) to Speck Pumps-Pool Products, Inc. or in shipping a repaired or replaced BADU SwimJet System(s) to Buyer.

From: Simone Kenny, AICP
To: Simone Kenny, AICP
Cc: Chuck Merenda; Adam Mengel, AICP, LEED AP BD+C
Bcc: "Anthony Lombardo"; "Anthony Lombardo"; "Michael Goodman"; "dan wilcox"; "tconner[redacted]cblpa.com"; "Mark Langello"; "Michael Boyd ([redacted]gmail.com)"; "[redacted]gmail.com"
Subject: FW: Runoff 3 Pelican for Public Record and PDB
Date: Tuesday, September 9, 2025 9:53:00 AM
Attachments: image001.png
image002.png
image003.png
image004.png
image005.png

Planning and Development Board:

Please see below and attached regarding Item No. 10 on tomorrow's Planning and Development Board regular meeting agenda.

Please contact us with any questions.

Thank you,
Simone

Simone Kenny, AICP
Senior Planner
E:[redacted]flaglercounty.gov | V: 386-313-4067 | W: www.flaglercounty.gov

Flagler County Board of County Commissioners

Bunnell, FL 32110

The mission of Flagler County is to provide high-quality services through a responsive workforce committed to excellence, integrity, in collaboration with the cities and to act as a fiscally responsible steward.

From: Jackie O'Connell <[redacted]yahoo.com>
Sent: Tuesday, September 9, 2025 9:15 AM
To: Simone Kenny, AICP <[redacted]flaglercounty.gov>; Planning Dept <[redacted]flaglercounty.gov>
Subject: Runoff 3 Pelican for Public Record and PDB

This is a photo of the runoff in front of 3 Pelican taken after the rainstorm night before last (~7pm Sept 7, Sunday). The water runoff will be worse when the impervious pool deck and (possible) large pump house are built. Unless Mr. Royer intends to redirect his **existing front downspouts across his front lawn** toward Pelican, a **similar issue** will be created

on Mockingbird when the **existing front side** downspouts are redirected to Mockingbird. And when Mr. Royer's **existing downspouts on back corner of his house are removed off adjacent property*** which is not owned by Mr. Royer **and redirected to Mockingbird**, it will be an **even worse issue** on Mockingbird.

When we get 12-15" rain during a hurricane followed by high tides, the neighborhood streets are going to have a real problem. This is why **we've requested the 3 Pelican variance plan address how runoff will be mitigated and/or kept on Royer property**.

* photo showing Royer backyard downspouts extending beyond his property line was previously submitted

Thank you,

Jackie O'Connell
[redacted]yahoo.com
336.512.9671 mobile

Adam Mengel, AICP, LEED AP BD+C

From: Simone Kenny, AICP
Sent: Tuesday, September 9, 2025 9:59 AM
To: Simone Kenny, AICP
Cc: Adam Mengel, AICP, LEED AP BD+C; Chuck Merenda
Subject: FW: Request for Fair Review Application #2025080063 of Pool House/Pump House/Shed Project

Planning and Development Board,

Please see below regarding Item No. 10 on tonight's Planning and Development Board regular meeting agenda.

Please contact us with any questions.

Thank you,
Simone

Simone Kenny, AICP
Senior Planner

E: [redacted]flaglercounty.gov | V: 386-313-4067 | W: www.flaglercounty.gov

Flagler County Board of County Commissioners

Bunnell, FL 32110

The mission of Flagler County is to provide high-quality services through a responsive workforce committed to excellence, integrity, in collaboration with the cities and to act as a fiscally responsible steward.

From: Jan <[redacted]ptd.net>
Sent: Tuesday, September 9, 2025 12:36 AM
To: Simone Kenny, AICP <[redacted]flaglercounty.gov>; Adam Mengel, AICP, LEED AP BD+C <[redacted]flaglercounty.gov>
Subject: Request for Fair Review Application #2025080063 of Pool House/Pump House/Shed Project

Dear Simone,

I am writing this letter as the homeowner. My husband, Raymond Royer, has been submitting and presenting applications to the county since February 2025. He has attended the TRC meetings prior to each application, asked questions, and sought guidance every step of the way — and yet we are still at a dead end.

Our project includes a small pool and a pool house/pump house/shed designed to be 9'7" high. The county's suggestion that we should use a 4-foot high shed is not practical or realistic. The structure must allow someone to stand inside to properly service the pool motor and to store patio furniture and equipment during storms. Our design is professional, aesthetically matches our home, and fully complies.

Instead of focusing on the facts and zoning requirements, we have been subjected to months of irrelevant and baseless objections from a small group of neighbors, two of which do not even reside in our community full-time. These property owners have been the most vocal about our project, even though it does not directly affect their property or rights as owners. Their objections are nothing more than ridiculous guessing and misunderstandings. To suggest we "swim in the ocean," "throw patio furniture into the pool," or that the pool house could somehow become living quarters or an Airbnb has no basis in reality.

One neighbor even claimed our professional renderings are "just computer-generated pictures" instead of recognizing that they were created to county specifications. This same neighbor went so far as to take a photo of our home and use a marker tool to draw their own version of what they thought we were requesting. That type of misrepresentation is absurd and misleading.

We have always spoken with our neighbors cordially and have acted in good faith throughout this process, following every rule, request, and requirement from the county. The truth is that some neighbors are using unrelated disputes — like our private roadway disagreements — to stir up conflict and delay our project.

It is our request that the county:

1. Disregard irrelevant, speculative, and inaccurate objections that are not tied to this project or zoning requirements.
2. Recognize that our project meets county requirements and is designed responsibly.
3. Provide a fair and timely resolution so we can move forward without further hardship.

This situation has cost us significant personal time, reapplication fees, rendering design expenses, and repeated document submissions. It has also caused unnecessary stress and division in the community.

We expect and request a fair decision in this matter, and we ask that the county reciprocate the good faith we have shown throughout this process by providing a timely and reasonable resolution.

The pool house/pump house/shed dimensions are well under the county's maximum allowance of 12 feet in height, and our project fully complies with the applicable standards.

Thank you for your attention and for moving this forward based on facts and requirements, not speculation.

Sincerely,

Jan Paxson

3 Pelican Lane

Adam Mengel, AICP, LEED AP BD+C

From: Dan OConnell <[redacted]yahoo.com>
Sent: Tuesday, September 9, 2025 2:10 PM
To: Simone Kenny, AICP; Planning Dept
Subject: 3 Pelican variance

Good afternoon Simone. I plan to bring you a flash drive with 5 slides for my presentation this evening so you will be able to show. Much easier than trying to use my cell phone. Which format is easiest for you, power point or pdf?

Additionally can you please send me any additional public comments you have received that did not make the packet posted Friday.

Thank you,
Dan OConnell

Sent from my iPhone

Adam Mengel, AICP, LEED AP BD+C

From: Simone Kenny, AICP
Sent: Tuesday, September 9, 2025 3:44 PM
To: Dan OConnell; Planning Dept
Subject: RE: 3 Pelican variance
Attachments: 20250908-0950-Harris Email.pdf; 20250908-1442-Oconnell Email.pdf; 20250909-0036-Paxon Email.pdf; 20250909-0953-Oconnell Email.pdf; 20250907-1400-Benoit email.pdf; 20250908-0822-Lane Email.pdf

Hello,

We cannot accept flash drives due to cybersecurity concerns. You can print-out your presentation or you can email it me. PowerPoint is fine.

Attached are public comments related to item 10 received after publishing.

Simone Kenny, AICP
Senior Planner
E: [redacted]flaglercounty.gov | V: 386-313-4067 | W: www.flaglercounty.gov

Flagler County Board of County Commissioners

Bunnell, FL 32110

The mission of Flagler County is to provide high-quality services through a responsive workforce committed to excellence, integrity, in collaboration with the cities and to act as a fiscally responsible steward.

-----Original Message-----
From: Dan OConnell <[redacted]yahoo.com>
Sent: Tuesday, September 9, 2025 2:10 PM
To: Simone Kenny, AICP <[redacted]flaglercounty.gov>; Planning Dept <[redacted]flaglercounty.gov>
Subject: 3 Pelican variance

Good afternoon Simone. I plan to bring you a flash drive with 5 slides for my presentation this evening so you will be able to show. Much easier than trying to use my cell phone. Which format is easiest for you, power point or pdf?

Additionally can you please send me any additional public comments you have received that did not make the packet posted Friday.

Thank you,
Dan OConnell

Sent from my iPhone

Growth Management Department-Planning & Development Project No.2025080063-AR 5921-Variance in Residential Limited Commercial District (3 Pelican Lane)
September 9, 20225 Board Meeting

comments from neighbor at 7 Pelican Lane (Nancye Walls) – Please vote NO based on
1. This project keeps going round and round. Board has approved EVERYTHING EXCEPT height of pump house. I do not see a 9-10 foot tall, 100 square foot building on front of property and ON PROPERTY LINE anywhere in Flagler County. Has Board ever approved variance like this ?

2. The pictures of wall and pump house are not the way it will really look.. They dont reflect the right-of-way intersection and existing houses that abut his property or the Power connection to the roof that will stick up like a pipe chimney. They dont reflect my tenants parking their work trucks along his 4 foot wall. There are 4 vacant lots - 2 at either end of Mockingbird and 2 behind Mr. Royer property. These will eventually be built on and each builder will want to extend to property line – front, side and back. They will all want setback variances like 3 Pelican. This is the start of ever growing congestion and falling property values.

3. As time goes on and property is sold, the probability of re-purposing this pump house is high – expensive pumps that generate wave resistance is low priority for most people. They only need to go to ocean. Expect pump house to become pool house, in-law suite, quest house, tiny house, BNB !!!

4. Hardship ? There are 3 pools, 2 detached garages in neighborhood and no project required a variance because owners followed the rules. Apparently the hardship is housing pumps. The pumps Mr Royer described were German made and very expensive. I googled this and found "Badu Jet Super-Sport Swim Jet System, 208-230V- $9,626.00 ships free – **shipping dimensions 25 by 20 by 21 inch; weight 124 pounds** upc code 840182102952" I have attached a picture. The control unit can be attached to wall to give easy access to changing water volume and air regulator

VR, [signature] 571-426-2867









Adam Mengel, AICP, LEED AP BD+C

From: Mo Brunk <[redacted]ymail.com>
Sent: Wednesday, September 10, 2025 12:04 PM
To: Adam Mengel, AICP, LEED AP BD+C
Subject: Project No. 2025080063 – REQUEST FOR A VARIANCE 3 Pelican Lane

Good Morning Mr. Mengel,
I attended last evening's meeting (and spoke) regarding the variance requested at 3 Pelican Lane. Would it be possible for you to email me copies of the letters neighbors sent to you regarding their stance on the proposed variance? I do not see them in the correspondece attached to the paperwork of Mr. Royer's documentation file.

Thank you for you assistance.
Maureen Brunk
5 Cardinal Lane
Flagler Beach

443-472-7402

Adam Mengel, AICP, LEED AP BD+C

From: Adam Mengel, AICP, LEED AP BD+C
Sent: Wednesday, September 10, 2025 3:03 PM
To: Mo Brunk
Cc: Simone Kenny, AICP; Chuck Merenda; PublicRecords
Subject: RE: Project No. 2025080063 – REQUEST FOR A VARIANCE 3 Pelican Lane
Attachments: 20250908-1442-Oconnell Email.pdf; 20250909-0036-Paxon Email.pdf; 20250909-0953-Oconnell Email.pdf; 20250907-1400-Benoit email.pdf; 20250908-0822-Lane Email.pdf; 20250908-0950-Harris Email.pdf; Scanned Document.pdf; 20250908-0902-Walls email.pdf

Hi Ms. Brunk:

When we publish the agenda and backup – typically the Friday before the Planning and Development Board meeting scheduled for the following Tuesday – we include in the backup all correspondence received up until the date of publication. Anything received after publishing the agenda and backup is sent to the Planning and Development Board via email.

I have attached the emails that we received (and sent to the Planning and Development Board members) related to Project No. 2025080063 following the publication of the Planning and Development Board's agenda and backup for the September 9, 2025 meeting.

I hope that this information if helpful.

Thank you,

Adam

Adam Mengel, AICP, LEED AP BD+C
Growth Management Director

E: [redacted]flaglercounty.gov | V: 386-313-4065 | W: www.flaglercounty.gov

Flagler County Board of County Commissioners
1769 E. Moody Blvd., Bldg 2
Bunnell, FL 32110

The mission of Flagler County is to provide high-quality services through a responsive workforce committed to excellence, integrity, in collaboration with the cities and to act as a fiscally responsible steward.

From: Mo Brunk <[redacted]ymail.com>
Sent: Wednesday, September 10, 2025 12:04 PM
To: Adam Mengel, AICP, LEED AP BD+C <[redacted]flaglercounty.gov>
Subject: Project No. 2025080063 – REQUEST FOR A VARIANCE 3 Pelican Lane

Good Morning Mr. Mengel,
I attended last evening's meeting (and spoke) regarding the variance requested at 3 Pelican Lane. Would it be possible for you to email me copies of the letters neighbors sent to you regarding their stance on the proposed variance? I do not see them in the correspondece attached to the paperwork of Mr. Royer's documentation file.

Thank you for you assistance.
Maureen Brunk
5 Cardinal Lane
Flagler Beach

443-472-7402

Adam Mengel, AICP, LEED AP BD+C

From: Jackie OConnell <[redacted]yahoo.com>
Sent: Friday, October 31, 2025 4:38 PM
To: Adam Mengel, AICP, LEED AP BD+C
Cc: Chuck Merenda; Simone Kenny, AICP
Subject: Re: Royer 3 Pelican Lane appeal

Thank you.
Jackie

Excuse brevity and typos, sent from mobile device

On Oct 31, 2025, at 4:17 PM, Adam Mengel, AICP, LEED AP BD+C <[redacted]flaglercounty.gov> wrote:

Hi Ms. O'Connell:

This week Mr. Royer sent us an email stating that he would like his variance appeal to be heard by the Board of County Commissioners at its Monday, January 12, 2026 regular meeting starting at 5 p.m. We will provide public notice – letters and signs – as the meeting date approaches.

I wanted to send this email to you now so that you are aware of this date.

Please contact us with any questions.

Thank you,

Adam

Adam Mengel, AICP, LEED AP BD+C
Growth Management Director

E: [redacted]flaglercounty.gov | V: 386-313-4065 | W: www.flaglercounty.gov

FLAGLER COUNTY FLORIDA

Flagler County Board of County Commissioners
1769 E. Moody Blvd., Bldg 2
Bunnell, FL 32110

The mission of Flagler County is to provide high-quality services through a responsive workforce committed to excellence, integrity, in collaboration with the cities and to act as a fiscally responsible steward.

Adam Mengel, AICP, LEED AP BD+C

From: Jackie O'Connell <[redacted]yahoo.com>
Sent: Tuesday, January 6, 2026 11:13 AM
To: Sarah Spector
Cc: Adam Mengel, AICP, LEED AP BD+C; Sean S. Moylan
Subject: FW: follow up Board/Commission meetings - Royer Appeal 01.12.26

Ms. Spector,
In reviewing the Royer Appeal packet provided to the BCC, it appears that four variance opposition letters were excluded. These letters were submitted to the Planning Board for its September meeting. For due process, it is very important that the Commissioners have a full picture of the amount of opposition to the variance request. Below is Mr. Moylan's response when a similar issue occurred at the May appeal.

Jackie O'Connell
Mockingbird Lane

-----Original Message-----
From: Sean S. Moylan <[redacted]flaglercounty.gov>
Sent: Monday, August 18, 2025 8:08 AM
To: Jackie OConnell <[redacted]yahoo.com>
Subject: RE: follow up Board/Commission meetings

Good morning,
I verified your comments/emails were not made part of the record on appeal. I instructed staff that the entire record must be presented to the BCC on appeals.

Sean S. Moylan
Deputy County Attorney
Board Certified City, County, and Local Government Law
E:[redacted]flaglercounty.gov | V: 386-313-4056

Flagler County Board of County Commissioners
1769 E. Moody Blvd., Bldg 2
Bunnell, FL 32110

-----Original Message-----
From: Jackie OConnell <[redacted]yahoo.com>
Sent: Sunday, August 17, 2025 2:02 PM
To: Sean S. Moylan <[redacted]flaglercounty.gov>
Subject: follow up Board/Commission meetings

Hello Mr. Moylan,
I appreciate the time you took to talk with me last Wednesday. There were a couple of items, relating to meetings on May 5 and Aug 12, that you were going to verify or research. Would you be able to provide an update (call or email) sometime on Monday, 8/18?
Thanks,
Jackie O'Connell

336.512.9671 mobile
Excuse brevity and typos, sent from mobile device

January 6, 2026

Flagler County Planning & Development

Dear sirs:

Re: Project No. 2025080063

Please include my objection again to the requested variance and appeal. I have provided the attached letters and photos previously submitted for previous hearings on this matter.

Sincerely,

George E. Benoit

George E. Benoit

14 Pelican Lane
15 Pelican Lane
17 Pelican Lane
6 Driftway Terrace
Flagler Beach, FL 32136

September 6, 2025

Flagler County Planning & Development

Dear sirs:

Re: Project No. 2025080063

Please include my objection again to the requested variance. I had provided the attached letter and photos for previous hearings on this matter.

Sincerely,

George E Benoit

17 Pelican Lane &
6 Driftway Terrace
Flagler Beach, FL 32136

July 8, 2025

Flagler County Planning and Development Board
1769 E. Moody Blvd., Bldg 2
Bunnell, FL 32110

RE: Project No. 2025050042 – AR 5689 – Variance in the R/C (Residential Limited Commercial) District

Dear sirs:

I am opposed to the requested variance for the following reasons:

1. I own two properties at the end of Pelican Lane. Pelican Lane slopes from route A1A down to the intracoastal waterway and all the stormwater runoff ends up in both of my yards every time we have a heavy rain.

2. The lots in the subdivision are all small under 10,000 ft.^{2}.

3. Granting a variance for a large shed roof will add to the water runoff and more accumulation on my property, which I don't need.

4. By approving this variance you will be setting a precedent for this type of request.

5. See 3 photos.

   a. Pelican Lane looking up to A1A.
   b. Sand and stone that washes down after storms.
   c. Flooded yard.

Sincerely,

George E Benoit

George E. Benoit


PELICAN LANE ↑
14 PELICAN →
← 15 PELICAN


14 PELICAN →
SAND + STONE
FROM WATER/RAIN


17 PELICAN

Adam Mengel, AICP, LEED AP BD+C

From: rental POC, Nan <[redacted]gmail.com>
Sent: Friday, January 9, 2026 1:25 PM
To: Nan Wahl; Jackie OConnell; Planning Dept
Subject: Jan 12, 2026 Mtg of Flagler county Commissioners proj #2025080063, 3 Pelican Lane
Attachments: 3 Pelican VARIANCES appeal 12 Jan.odt

Comments for Flagler County Board of County Commissioners, Jan 12, 2026, concerning 3 Pelican Lane Project # 2025080063

Good morning, I am Nancye Walls, owner of 7 Pelican Lane and I do not support Mr Royer's appeal.. I feel the Planning Boards was more than fair in approving all variances, I even worry that these variances set a bad precedence for future development- 4 -5 vacant lots within River-Beach Subdivision whose owners will want the same variances that virtually allow boundary to boundary construction with limited provisions for utilities, jeopardizes safety, disregards public access, limits privacy and puts a utility building in direct sight of A1A travelers and most of the neighborhood residences. Property values are declining all over and this building is going to be an eye-sore !

DID THE FLAGLER COUNTY PLANNING PROCESS FAIL MR ROYER ?

Multiple variances requested and **approved by the Planning Board in February 2025:**

Variances: New construction of pool, pump house, pool deck
3.5 foot rear
25 foot left street side
.8 percentage point lot coverage

These variance allow the construction of approximately 100 square foot pool house situated on or within 2 feet of the property border with Mockingbird Street

ALL VARIANCES WERE APPROVED BUT HEIGHT OF POOL HOUSE WAS NOT TO EXCEED FOUR FEET (per subdivision covenants) and the square footage allowed was virtually unlimited if the pool pumps and storage were incorporated into the 4 foot fence

Mr Royer is appealing the limitation on the pool house height. He plans to build a 8 by 12 foot concrete building that is approximately 9 feet high almost directly on the property line – no setback – and feels the height limitation restricts the full use of his property. My property at 7 Pelican is directly across Mockingbird. The only thing good about the prospects of having a high, wide solid concrete wall so near my property is that I can bounce a tennis ball against it.

I don't see high structures on the side of the road in any residential areas. There are also other factors that must be considered : utility right-of-ways, preserving property values, public safety, and setting a standard that is inconsistent with the neighborhood are just a few.

Adam Mengel, AICP, LEED AP BD+C

From: Ray <[redacted]ptd.net>
Sent: Sunday, January 11, 2026 10:25 AM
To: Adam Mengel, AICP, LEED AP BD+C; Simone Kenny, AICP
Cc: Raymond Royer
Subject: Fwd: Swim jet installation
Attachments: Letter 01-09-2026.pdf

To whom this concerns,
Please summit this into my file for 1/12/2026 5:30 pm. schedule appeal meeting. This is a follow up about the sales manager Chris having a general conversation Speck installation with a neighboring party.
Chris was not aware of his conversation or email exchange was going to be used for an outside reference, like a neighbor installation being a mixed pool equipment or the environment being by salt conditions to hurricane zones.

Thanks,
Raymond Royer

Sent from my iPhone

Begin forwarded message:

> **From:** Ray <[redacted]ptd.net>
> **Date:** January 9, 2026 at 1:21:44 PM EST
> **To:** Chris Doyle <c.[redacted]speck-pumps.com>
> **Subject: Re: Swim jet installation**
>
> Chris,
> Perfectly Balanced with explaining and thanks.
> Ray
> Sent from my iPhone
>
> > On Jan 9, 2026, at 11:38 AM, Chris Doyle <c.[redacted]speck-pumps.com> wrote:
> >
> > Hey Ray,
> >
> > See the attached letter in reference to the pool equipment situation. Please let me know if you have any questions.
> >
> > Regards,

Chris Doyle
Southeast Regional Sales Manager

Speck Pumps • 8125 Bayberry Road •Jacksonville, FL 32256 • USA
Phone: 904-739-2626 | **Cell: 904-314-3050** | **Fax:** 904-737-5261
E-mail: C.[redacted]speck-pumps.com | **Website:** www.speck-pumps.com

NOTICE OF CONFIDENTIALITY: This e-mail from Speck Pumps-Pool Products, Inc. is intended only for the use of the individual or entity to whom it is addressed and may contain confidential, copyrighted and/or legally privileged information. If you are not the intended recipient, you are hereby notified that any dissemination, distribution or copying of this e-mail is strictly prohibited. It is strictly forbidden to share any part of this message with any third party, without written consent of the sender. If you received this e-mail in error please return it to the sender and destroy the original message. Thank you.

While anti-virus software is in place the recipient should be aware that this e-mail and any attachments might not be free from viruses in their various forms. Speck Pumps-Pool Products, Inc. accepts no liability for any loss or damage that may occur as a result of the transmission to the recipient.

<Letter 01-09-

26.pdf>

Hey Ray,

This message is intended to provide clarification from Speck Pumps' perspective regarding a prior technical discussion.

The original conversation and related emails were part of a general, informational exchange concerning the BADU swim jet system Package D and its typical height and installation requirements. That discussion was limited in scope and intended solely to address general system requirements under standard installation scenarios.

It has since come to our attention that this information was referenced in relation to an overall pool equipment configuration that was not discussed in the prior conversation. Other swimming pool products—such as pool pumps, salt systems, filtration equipment, and heat pumps—may have different sizing or installation requirements that fall outside the scope of the BADU swim jet system.

While we cannot speak to the installation guidelines or requirements of other swimming pool equipment manufacturers, it is our general opinion that minimizing prolonged exposure to salt air will contribute to improved longevity of most pool equipment.

From the manufacturer's standpoint, we do not evaluate, approve, or disapprove site-specific structures, neighboring installations, or local zoning interpretations. Any application of our general guidance to a specific project should be reviewed by the appropriate design professionals, installers, or local authorities to ensure compliance with all applicable codes and conditions.

We remain available to provide general technical information related to the swim jet system itself, should it be helpful; however, we are not positioned to arbitrate or interpret matters between neighboring parties.

Please feel free to reach out if additional technical clarification is needed regarding the swim jet system.

Best Regards,

Chris Doyle
Southeast Regional Sales Manager

Adam Mengel, AICP, LEED AP BD+C

From: Ray <[redacted]ptd.net>
Sent: Sunday, January 11, 2026 11:20 AM
To: Adam Mengel, AICP, LEED AP BD+C; Simone Kenny, AICP
Cc: Raymond Royer
Subject: Between 3388-3398 N. Ocean Shore Blvd.

To whom this concerns,

This is one of three pool structures larger than 4' in height within plus or minimize one mile from 3 Pelican Lane , Flagler Beach. This property is located in the RC corridor that stretches north on A1A by Zoning and Planning.

This is a new structure being constructed behind the home with a large pool and homeowner planning in commendation pool housing within feet of the pool. This structure appears to be 12' in height and approximately 500 plus sqft.

The pool housing structure is a very close match of the main structure that is three stories in height. The pool house structure was also built in block with a mental roof.

Please note this into my file as well for 01/12/2026 5:30 pm. repeal hearing.

Thanks,
Raymond Royer







Sent from my iPhone

From:	Mo Brunk
To:	Adam Mengel, AICP, LEED AP BD+C; Planning Dept
Subject:	Project No. 2025080063 – Request for an Appeal of the Planning and Development Board's Decision
Date:	Monday, January 12, 2026 2:43:39 PM

Dear Mr. Mengel and the Planning Department,
I am requesting the Commissioners uphold the Planning Board's decision. Mr. Royer has **NOT** been deprived of all reasonable use of the property as allowed in the zoning district. Quite the opposite, he has been granted the variances necessary to have a pool, pool deck, and pump house; there is no longer a hardship.

In deciding, the Board of County Commissioners must make three determinations: the Planning and Development Board failed to base its decision on competent substantial evidence, accord due process, and/or observe the essential requirements of law. All 3 determinations were successfully met by the Planning and Development Board.

Mr. Royer is creating a self-induced hardship by insisting on an over-sized pump house. If he doesn't feel the 4-foot height is adequate and he cannot build the pump house he desires with the variances granted, then perhaps this is not the ideal lot for him.

The other homes in the neighborhood with pools have not requested any special variances for their pool pumps; there is no need to set a precedence for over-sized buildings on small lots.

The requirements specify "A variance, if granted, shall be the minimum variance necessary to alleviate the hardship". The board has granted Mr. Royer the necessary variances for the pool and pump house; he has not been denied use of his property. Please do not overturn the Planning Board's decision regarding an over-sized pump house.

There is no competent, substantial evidence in the official record that Mr. Royer has unnecessary hardship; therefore, the Commissioners should affirm the Planning Board's decision.

Maureen & Andrue Brunk
5 Cardinal Lane

From:	PenTeleData Webmail
To:	Raytaj1335; Hannah Lademann; ortizbuildingcontractor
Cc:	fatboy6
Subject:	Re: Project 2025080063, April 14th. 2026, Parcel Number 223-11-31-5300-00000-0130
Date:	Thursday, April 23, 2026 8:18:55 PM

To Whom It May Concern,

In reference to the above-mentioned project Tajmir Davis Engineering is asking for more clarity in order to move forward. Flagler County Planning and Develoment Board requested more discovery information on 04/14/2026 and requested an Enginerring Report. Ray from Tajmir Davis Engineering is requesting something in writing from Flagler County Planning and Develoment since this is a continuance there is no written denial notice that I can provide him. At many previous TRC meetings they stated the structure can go to a height of 12' anything further requires another height application request. My application request from February 2025 has always been for 10' but the build is going to be approximately 9' 7" with allowance of a 3" buffer to avoid going over the 10' height request.

Months prior to the 4/14/26 hearing I spoke with Ray from Tajmir Davis Engineering who was referred to me by Ortiz Building Contractor. At that time my discussion with Ray from Tajmir Davis Engineering was regarding the pool system and the 4' height that the county approved and his response was that the 4' height isn't reasonable for the mechanical equipment and to create an architectal design for a project that will not be suitable is a waste of time and money for both us.

Per my conversation with Hannah Lademann, Growth Mgt. Planning I am sending this email to ask her to respond to ALL so that Ray from Tajir Davis Engineering has record that no denial notice will be issued due to the continuance hearing on 8/11/26. This will allow me to continue collaborating with Tajir Davis Engineering and Ortiz Building Contractor.

Thank you,
Raymond Royer
3 Pelican Lane
Flagler Beach, Fl 32136
(610)636-5826
fatboy6@ptd.net

> **From:** PenTeleData <fatboy6@ptd.net>
> **To:** Raytaj1335 <Raytaj1335@gmail.com>; hlademann <hlademann@flaglercounty.gov>
> **Date:** Thursday, 23 April 2026 8:24 AM EDT

From:	Hannah Lademann
To:	"PenTeleData Webmail"; Raytaj1335; ortizbuildingcontractor
Cc:	Simone Kenny, AICP
Subject:	RE: Project 2025080063, April 14th. 2026, Parcel Number 223-11-31-5300-00000-0130
Date:	Monday, April 27, 2026 4:56:00 PM
Attachments:	image001.png image002.png image003.png image004.png image005.png

Hi Ray,

Sorry for the delay in response, I was out of the office on Friday. To summarize, the Planning and Development Board is looking for evidence from an engineer or other design propfessional supporting the need for a taller structure for the pumps or equipment that will be housed in the structure.

Hannah Lademann

Planner

E: HLademann@flaglercounty.gov | V: 386-313-4069 | W: www.flaglercounty.gov

Flagler County Board of County Commissioners

Bunnell, FL 32110

The mission of Flagler County is to provide high-quality services through a responsive workforce committed to excellence, integrity, in collaboration with the cities and to act as a fiscally responsible steward.

From: PenTeleData Webmail <fatboy6@ptd.net>
Sent: Thursday, April 23, 2026 8:19 PM
To: Raytaj1335 <Raytaj1335@gmail.com>; Hannah Lademann <HLademann@flaglercounty.gov>; ortizbuildingcontractor <ortizbuildingcontractor@gmail.com>
Cc: fatboy6 <fatboy6@ptd.net>
Subject: Re: Project 2025080063, April 14th. 2026, Parcel Number 223-11-31-5300-00000-0130

To Whom It May Concern,

In reference to the above-mentioned project Tajmir Davis Engineering is asking for more clarity in order to move forward. Flagler County Planning and Develoment Board requested more discovery information on 04/14/2026 and requested an Enginerring Report. Ray from Tajmir Davis Engineering is requesting something in writing from Flagler County Planning and Develoment since this is a continuance there is no written denial notice that I can provide him. At many previous TRC meetings they stated the structure can go to a height of 12' anything further requires another height application request. My application request from February 2025 has always been for 10' but the build is going to be approximately 9' 7" with allowance of a

3" buffer to avoid going over the 10' height request.

Months prior to the 4/14/26 hearing I spoke with Ray from Tajmir Davis Engineering who was referred to me by Ortiz Building Contractor. At that time my discussion with Ray from Tajmir Davis Engineering was regarding the pool system and the 4' height that the county approved and his response was that the 4' height isn't reasonable for the mechanical equipment and to create an architectal design for a project that will not be suitable is a waste of time and money for both us.

Per my conversation with Hannah Lademann, Growth Mgt. Planning I am sending this email to ask her to respond to ALL so that Ray from Tajir Davis Engineering has record that no denial notice will be issued due to the continuance hearing on 8/11/26. This will allow me to continue collaborating with Tajir Davis Engineering and Ortiz Building Contractor.

Thank you,
Raymond Royer
3 Pelican Lane
Flagler Beach, Fl 32136
(610)636-5826
[redacted]

From: PenTeleData <[redacted]>
To: Raytaj1335 [redacted]
<hlademann@flaglercounty.gov>
Date: Thursday, 23 April 2026 8:24 AM EDT

From:	Ortiz Building Contractor
To:	Hannah Lademann
Cc:	PenTeleData Webmail; Raytaj1335; Simone Kenny, AICP
Subject:	Re: Project 2025080063, April 14th. 2026, Parcel Number 223-11-31-5300-00000-0130
Date:	Tuesday, April 28, 2026 9:22:40 AM
Attachments:	image001.png image002.png image003.png image004.png image005.png Speck Flyer-Cartridge-Filters.pdf Installation-Manual-BaduJet-Turbo-Pro.pdf

---

Good morning Hannah,
I am working with Mr. Royer on this project and will be both the builder for the Accessory structure and the pool builder. The need for the height of 9' 7" is due to several factors. First being that the equipment needs room to breathe and allow built up gasses to dissipate, we will be installing baffles at either end of the structure, a solar powered roof vent fan and venting on ridge to allow for maximum air flow. Second reason for the height requirements is that in order to service the equipment which is already at above 4' with the equipment pad, is to allow you to pull the filters out for cleaning which are also approximately 45". In order to properly service equipment you must have clearance to work on all pool equipment. I am attaching some of the information needed to explain better. Anchor will be handling the electrical portion of this install. If you have any further questions please feel free to contact me.
Thank you,
Tamara

Tamara Daniels, Director of Ortiz Building & Roofing Divisions

Jose' E. Ortiz, Jr., President
Jose' E. Ortiz, Jr., L.L.C.
D.B.A. Ortiz Building Contractor
LIC# RB29003834, CPC1460694
4601 E. Moody Blvd, Suite A3
Bunnell, FL 32110
(386) 313-6055

On Mon, Apr 27, 2026 at 4:56 PM Hannah Lademann <HLademann@flaglercounty.gov> wrote:

> Hi Ray,
>
> Sorry for the delay in response, I was out of the office on Friday. To summarize, the Planning and Development Board is looking for evidence from an engineer or other design propfessional supporting the need for a taller structure for the pumps or equipment that will be housed in the structure.
>
> **Hannah Lademann**
> Planner

E: HLademann@flaglercounty.gov | V: 386-313-4069 | W: www.flaglercounty.gov

Flagler County Board of County Commissioners

Bunnell, FL 32110

The mission of Flagler County is to provide high-quality services through a responsive workforce committed to excellence, integrity, in collaboration with the cities and to act as a fiscally responsible steward.

From: PenTeleData Webmail [redacted]
Sent: Thursday, April 23, 2026 8:19 PM
To: Raytaj1335 [redacted] Hannah Lademann <HLademann@flaglercounty.gov>; ortizbuildingcontractor [redacted]
Cc: fatboy6 [redacted]
Subject: Re: Project 2025080063, April 14th. 2026, Parcel Number 223-11-31-5300-00000-0130

To Whom It May Concern,

In reference to the above-mentioned project Tajmir Davis Engineering is asking for more clarity in order to move forward. Flagler County Planning and Develoment Board requested more discovery information on 04/14/2026 and requested an Enginerring Report. Ray from Tajmir Davis Engineering is requesting something in writing from Flagler County Planning and Develoment since this is a continuance there is no written denial notice that I can provide him. At many previous TRC meetings they stated the structure can go to a height of 12' anything further requires another height application request. My application request from February 2025 has always been for 10' but the build is going to be approximately 9' 7" with allowance of a 3" buffer to avoid going over the 10' height request.

Months prior to the 4/14/26 hearing I spoke with Ray from Tajmir Davis Engineering who was referred to me by Ortiz Building Contractor. At that time my discussion with Ray from Tajmir Davis Engineering was regarding the pool system and the 4' height that the county approved and his response was that the 4' height isn't reasonable for the mechanical equipment and to create an architectal design for a

project that will not be suitable is a waste of time and money for both us.

Per my conversation with Hannah Lademann, Growth Mgt. Planning I am sending this email to ask her to respond to ALL so that Ray from Tajir Davis Engineering has record that no denial notice will be issued due to the continuance hearing on 8/11/26. This will allow me to continue collaborating with Tajir Davis Engineering and Ortiz Building Contractor.

Thank you,

Raymond Royer

3 Pelican Lane

Flagler Beach, Fl 32136

(610)636-5826

[redacted]

From: PenTeleData [redacted]
To: Raytaj1335 <[redacted]hlademann <hlademann@flaglercounty.gov>
Date: Thursday, 23 April 2026 8:24 AM EDT

From:	Hannah Lademann
To:	"Ortiz Building Contractor"
Cc:	PenTeleData Webmail; Raytaj1335; Simone Kenny, AICP
Subject:	RE: Project 2025080063, April 14th. 2026, Parcel Number 223-11-31-5300-00000-0130
Date:	Tuesday, April 28, 2026 11:36:00 AM
Attachments:	image001.png image002.png image003.png image004.png image005.png

Hi Tamara,

We can pass along this correspondence to the Planning Board as apart of the public record. I do believe what they're looking for is substantial evidence that the 9'7" height request is the **minimum relief necessary** to allow for the airflow and maintenance you've mentioned.

Hannah Lademann

Planner

E: HLademann@flaglercounty.gov | V: 386-313-4069 | W: www.flaglercounty.gov

Flagler County Board of County Commissioners

Bunnell, FL 32110

The mission of Flagler County is to provide high-quality services through a responsive workforce committed to excellence, integrity, in collaboration with the cities and to act as a fiscally responsible steward.

From: Ortiz Building Contractor [redacted]

Sent: Tuesday, April 28, 2026 9:21 AM

To: Hannah Lademann <HLademann@flaglercounty.gov>

Cc: [redacted] Simone Kenny, AICP <SKenny@flaglercounty.gov>

Subject: Re: Project 2025080063, April 14th. 2026, Parcel Number 223-11-31-5300-00000-0130

Good morning Hannah,
I am working with Mr. Royer on this project and will be both the builder for the Accessory structure and the pool builder. The need for the height of 9' 7" is due to several factors. First being that the equipment needs room to breathe and allow built up gasses to dissipate, we will be installing baffles at either end of the structure, a solar powered roof vent fan and venting on ridge to allow for maximum air flow. Second reason for the height requirements is that in order to service the equipment which is already at above 4' with the equipment pad, is to allow you to pull the filters out for cleaning which are also approximately 45". In order to properly service equipment you must have clearance to work on all pool equipment. I am attaching some of the information needed to explain better. Anchor will be handling the

electrical portion of this install. If you have any further questions please feel free to contact me.
Thank you,
Tamara

Tamara Daniels, Director of Ortiz Building & Roofing Divisions

Jose' E. Ortiz, Jr., President
Jose' E. Ortiz, Jr., L.L.C.
D.B.A. Ortiz Building Contractor
LIC# RB29003834, CPC1460694
4601 E. Moody Blvd, Suite A3
Bunnell, FL 32110
(386) 313-6055

On Mon, Apr 27, 2026 at 4:56 PM Hannah Lademann <HLademann@flaglercounty.gov> wrote:

> Hi Ray,
>
> Sorry for the delay in response, I was out of the office on Friday. To summarize, the Planning and Development Board is looking for evidence from an engineer or other design propfessional supporting the need for a taller structure for the pumps or equipment that will be housed in the structure.
>
> **Hannah Lademann**
> Planner
> E: HLademann@flaglercounty.gov | V: 386-313-4069 | W: www.flaglercounty.gov
>
> **Flagler County Board of County Commissioners**
> Bunnell, FL 32110
>
> ***The mission of Flagler County is to provide high-quality services through a responsive workforce committed to excellence, integrity, in collaboration with the cities and to act as a fiscally responsible steward.***
>
> ---
>
> **From:** PenTeleData Webmai[redacted]
> **Sent:** Thursday, April 23, 2026 8:19 PM
> **To:** [redacted] Hannah Lademann <HLademann@flaglercounty.gov>; [redacted]
> **Subject:** Re: Project 2025080063, April 14th. 2026, Parcel Number 223-11-31-5300-00000-0130
>
> To Whom It May Concern,

In reference to the above-mentioned project Tajmir Davis Engineering is asking for more clarity in order to move forward. Flagler County Planning and Develoment Board requested more discovery information on 04/14/2026 and requested an Enginerring Report. Ray from Tajmir Davis Engineering is requesting something in writing from Flagler County Planning and Develoment since this is a continuance there is no written denial notice that I can provide him. At many previous TRC meetings they stated the structure can go to a height of 12' anything further requires another height application request. My application request from February 2025 has always been for 10' but the build is going to be approximately 9' 7" with allowance of a 3" buffer to avoid going over the 10' height request.

Months prior to the 4/14/26 hearing I spoke with Ray from Tajmir Davis Engineering who was referred to me by Ortiz Building Contractor. At that time my discussion with Ray from Tajmir Davis Engineering was regarding the pool system and the 4' height that the county approved and his response was that the 4' height isn't reasonable for the mechanical equipment and to create an architectal design for a project that will not be suitable is a waste of time and money for both us.

Per my conversation with Hannah Lademann, Growth Mgt. Planning I am sending this email to ask her to respond to ALL so that Ray from Tajir Davis Engineering has record that no denial notice will be issued due to the continuance hearing on 8/11/26. This will allow me to continue collaborating with Tajir Davis Engineering and Ortiz Building Contractor.

Thank you,
Raymond Royer
3 Pelican Lane
Flagler Beach, Fl 32136
(610)636-5826
[redacted]

From: PenTeleData [redacted] hlademann <hlademann@flaglercounty.gov>
Date: Thursday, 23 April 2026 8:24 AM EDT

FLAGLER COUNTY PROPERTY APPRAISER



Overview



Legend

- Parcels
- Roads
- Streams and Rivers

Date created: 3/27/2026
Last Data Uploaded: 3/27/2026 7:26:59 AM

Developed by SCHNEIDER GEOSPATIAL

Growth Management Department
Planning & Development
1769 E. Moody Blvd, Bldg. 2
Bunnell, FL 32110

Flaglercounty.gov
Phone: (386)313-4009

March 26, 2026

«OwnerName» «OwnerAddress1»
«OwnerAddress2»
«OwnerCityStZip»

RE: Project No. 2025080063 – AR No. 5921 – Variance in the R/C (Residential/Limited Commercial) District

Dear Property Owner,

As an owner of property within 300' of the property referenced herein, the Flagler County Planning Department, in accordance with Section 2.07.00 of the Flagler County Land Development Code, advises you that:

A request has been made by owner Raymond R. Royer Jr., located at 3 Pelican Lane, identified as Parcel Number 23-11-31-5200-00000-0130, for a Variance from the 25 Foot Minimum Street Side (West) Setback Requirement for a Pump House and a Variance from the Maximum Allowed Lot Coverage in the R/C (Residential/Limited Commercial) District.

You are hereby notified that a public hearing before the **Flagler County Planning and Development Board**, required by law, will be held in the Flagler County Government Services Building, Board Chambers, at 1769 East Moody Boulevard, Building 2, Bunnell, Florida, on **April 14 , 2026** beginning at **6:00 p.m.** or as soon thereafter as possible. You are welcome to attend and express your opinion.

Sincerely,
Hannah Lademann

Hannah Lademann
Planner

NOTE: PURSUANT TO SECTION 286.0105. FLORIDA STATUTES, IF A PERSON DECIDED TO APPEAL ANY DECISION BY THE BOARD, AGENCY OR COMMISSION WITHRESPECT TO ANY MATTER CONSIDERED AT SUCH MEETING OR HEARING, HE OR SHE WILL NEED A RECORD OF THE PROCEEDINGS AND THAT, FOR SUCH PURPOSE, HE OR SHEWILL NEED TO ENSURE THAT A VERBATUM RECORD OF THE PROCEEDINGS IS MADE, WHICH RECORD INCLUDES THE TESTAMONY AND EVIDENCE UPON WHICH THE APPEAL IS BASED.

Andy Dance District 1 | **Greg Hansen** District 2 | **Kim Carney** District 3 | **Leann Pennington** District 4 | **Pam Richardson** District 5

ParcelId	OwnerName	OwnerAddress1	OwnerAddress2	OwnerAddress3	OwnerCityStZip
23-11-31-1700-00000-0090	HOGAN JAMES A &	DEBORAH A H&W	12 DRIFTWAY TERRACE		FLAGLER BEACH, FL 32136
23-11-31-4790-00000-0290	ROANE DONALD T &	DONNA W H&W	344 SAINT JOHNS FOREST BOULEVARD		SAINT JOHNS, FL 32259
23-11-31-5300-00000-0210	BRUNK ANDRUE E	& MAUREEN O H&W LIFE ESTATE	5 CARDINAL LANE		FLAGLER BEACH, FL 32136
23-11-31-5300-00000-0180	HARRIS RENE DAWN & JEFFREY D	RIZK	3 CARDINAL LANE		FLAGLER BEACH, FL 32136
23-11-31-1700-00000-0110	STEINBRING ANNE L & DAVID B BUSCH H&W		8 DRIFTWAY TERRACE		FLAGLER BEACH, FL 32136
23-11-31-5300-00000-0060	HARE ROBERT & NATALIE	DIEDERICH H&W	12 PELICAN LN		FLAGLER BEACH, FL 32136
23-11-31-5300-00000-0110	ELLSBURY CHARLES E & LINDA M	H&W	9 PELICAN LANE		FLAGLER BEACH, FL 32136
23-11-31-5300-00000-0170	OCONNELL DANIEL E & JACQUELINE	A OCONNELL H&W	3617 REDFIELD DRIVE		GREENSBORO, NC 27410
23-11-31-1700-00000-0020	LUKUCH GRAZYNA	LIFE ESTATE	1239 OCEAN SHORE BOULEVARD APT 9E		ORMOND BEACH, FL 32176
23-11-31-1700-00000-0120	BENOIT GEORGE E JR LIFE ESTATE		17 PELICAN LANE		FLAGLER BEACH, FL 32136
23-11-31-5300-00000-0120	WALLS NANCYE WINDSOR		89 WESTFIELD LANE		PALM COAST, FL 32164
23-11-31-1700-00000-0130	FRASER DEREK GUY TRUSTEE &		343 BLUE HAMPTON DRIVE		PONTE VEDRA, FL 32081
23-11-31-5300-00000-0050	GORDO INVESTMENTS MANAGEMENT LLC		4070 N CHINOOK LN		ORMOND BEACH, FL 32174
23-11-31-1700-00000-0010	HINMAN JANET F TRUSTEE		7 DRIFTWAY TERRACE		FLAGLER BEACH, FL 32136
23-11-31-5300-00000-0230	OCONNELL JACQUELINE & DANIEL E	OCONNELL W&H	3617 REDFIELD DRIVE		GREENSBORO, NC 27410
23-11-31-5300-00000-0040	MCAULIFFE HEATHER	& KINDRA MCCULLOUGH JTWROS	8 PELICAN LANE		FLAGLER BEACH, FL 32136
23-11-31-5300-00000-0160	HOYT DAVID HOUSTON	LIFE ESTATE	3880 MARTIN STREET		ORLANDO, FL 32806
23-11-31-5300-00000-0130	ROYER RAYMOND R JR & JANICE L	PAXSON	3 PELICAN LANE		FLAGLER BEACH, FL 32136
23-11-31-1700-00000-0140	FRASER DEREK G TRUSTEE		343 BLUE HAMPTON DRIVE		PONTE VEDRA, FL 32081
23-11-31-5300-00000-0030	MCKAIG SERRA		213 W VIRGINIA AVENUE		DELAND, FL 32720
23-11-31-4790-00000-0300	CORNERSTONE REALTY AND TRUST LLC		35 N RIVERWALK DR		PALM COAST, FL 32137
23-11-31-5300-00000-0240	TASLIDZIE ESAD		5922 CORAL LAKE DRIVE		POLMANO BEACH, FL 33063
23-11-31-5300-00000-0150	ANESGART ALICE E LIFE ESTATE		3126 N OCEAN SHORE BOULEVARD		FLAGLER BEACH, FL 32136
23-11-31-5300-00000-0020	CASTILLO MANUEL & CARIDAD H&W		3110 N OCEAN SHORE BLVD		FLAGLER BEACH, FL 32136
23-11-31-5300-00000-0140	SCUDDER ROBERT KIRK	& GINA MARIE CASTELLO JTWROS	3118 N OCEAN SHORE BLVD		FLAGLER BEACH, FL 32136
23-11-31-4790-00000-0310	SCHWEITZ FREDRICK O		400 SW 48TH STREET RD		OCALA, FL 34474
23-11-31-5300-00000-0010	JANECZEK THOMAS		3110 N OCEAN SHORE BLVD		FLAGLER BEACH, FL 32136
23-11-31-1700-00010-00B0	HICKS JOHN	& BRITTANY H&W	1001 TEMPLE GROVE PLACE		WINTER GARDEN, FL 34787
23-11-31-1700-00010-00C0	POKORSKY THOMAS M & MICHELE M	POLORSKY H&W	3131 N OCEAN SHORE BLVD		FLAGLER BEACH, FL 32136
23-11-31-0000-02110-0000	THREE SISTERS INVESTMENTS LLC		3206 SANDY RIDGE DR		CLEARWATER, FL 33761
23-11-31-0000-02100-0000	SHIKANY CHARLES P & KRISTIN	H&W	728 W JACKSON BLVD		CHICAGO, IL 60661
23-11-31-0000-02090-0000	3109 N A1A LLC		DEREK OR JODIE FRASER 343 BLUE HAMPTON DRIVE		PONTE VEDRA, FL 32081
23-11-31-0000-02080-0000	3109 N A1A LLC		DEREK OR jODIE FRASER 343 BLUE HAMPTON DRIVE		PONTE VERDA, FL 32081
23-11-31-2925-00000-0010	MOLLIS KRISTI LYNN		3105 N OCEAN SHORE BLVD		FLAGLER BEACH, FL 32136

I hereby affirm mailed notice to each owner on 3/26/2026 for the Planning and Development Board meeting on 4/14/2026 at 6:00 pm.

Hannah Lademann, Planner


NOTICE OF
PUBLIC HEARING

FLAGLER COUNTY PLANNING AND DEVELOPMENT BOARD REGULAR MEETING
Flagler County Government Services Building,
1769 East Moody Blvd., Board Chambers, Bunnell, FL

MEETING MINUTES

Tuesday, August 11, 2026, at 6:00 P.M.

1. **Roll Call:** The meeting was called to order by the Chair and a quorum was present.

   Members Present: Anthony Lombardo, Dan Wilcox, Mark Langello (Chair), Ron Long (Vice-Chair), Michael Boyd and Timothy Conner.

   Members Absent: Michael Goodman.

   Present: Chuck Merenda, Interim Growth Management Director; Simone Kenny, Principal Planner; and Hannah Lademann, Senior Planner.

   Board Counsel: Sarah Spector, Assistant County Attorney

2. Pledge to the Flag.

3. Approval of July 14, 2026 minutes.

   Motion to approve by: Michael Boyd
   Seconded by: Anthony Lombardo
   Motion carried unanimously.

Quasi-Judicial Process: The audience should refrain from clapping, booing or shouts of approval or disagreement. To avoid potential legal ramification and possible overturning of a decision by the Courts, a public hearing must be fair in three respects: form, substance and appearance.

Time limits will be observed:
Staff – 10 minute presentation.
Applicant – 15 minute presentation (unless time extended by consensus of Board).
Public Comment – 3 minutes per speaker, 5 minutes if speaking on behalf of a group.
Applicant Rebuttal and Closing Staff Comments – 10 minutes each.

4. Swear in Applicants and Members of Public wishing to testify on any item on today's agenda.

5. Quasi-judicial requiring disclosure of ex parte communication:
   Project 2025080063 – **REQUEST FOR VARIANCE IN THE R/C (RESIDENTIAL LIMITED COMMERCIAL) DISTRICT** – Request for a Variance in the R/C (Residential/limited Commercial) District for a Pump House at 3 Pelican Lane. Parcel Number: 223-11-31-5300-00000-0130; Parcel Size: 7,500+/- Square Feet (0.17+/- Acres). Owner/Applicant: Raymond Royer Jr. (AR 5921).
   (TRC, PDB)

   Board Comments: None

   Staff Presentation: Hannah Lademann, Senior Planner.

Chuck Merenda, Interim Growth Management Director speaks to the Engineering Report staff received today ahead of tonight's meeting.

Applicant Presentation: Raymond Royer, Owner. Tamara Daniels, Ortiz Contracting Services.

Mr. Lombardo asks if there is going to be a heat pumps in addition to the pool pumps? Ms. Daniels confirms yes that there will be and all equipment will be housed in the building. Mr. Royer states that the structure will not insulated, but it may house two heat pumps.

Mr. Langello asks Ms. Daniels to clarify her mention of gases. Ms. Daniels states she was referring to the natural gasses from the equipment, such as chlorine.

Mr. Conner asks if they can improve the ventilation by installing fans. Ms. Daniels states that they could, but Mr. Royer wants to preserve some of the heat generated. Mr. Conner confirms that they need a larger building for proper ventilation but they also want to contain all the heat inside at the same time. Ms. Daniels states they want the gases to dissipate, that if they build up and are exasperated by the heat then it can cause problems. Mr. Conner asks if they couldn't do that with fans. Ms. Daniels says she supposes you could. Mr. Conner states that it used to be customary to go down with equipment and asks if that is not an option here. Ms. Daniels states that she doesn't have the specifics of the pool equipment, but that the equipment should be level with the deck, and that they're not buried anymore.

Public Comments:

Maureen Bronk, resident of 5 Cardinal Lane. She states that there have been statements made that have threat of a law suit, and she hopes that this does not sway the way the Board votes. She states that legal counsel has stated that there needs to be substantial competence evidence to support the need for the increased pumphouse, which the provided engineering letter does not provide. She states that the information provided in the letter does not support the need for an 8' height with proper codes or manufactures requirements. She suggests there are other alternatives for housing the equipment that meet the 4' height limitation of the pumphouse. She asks that the Board not approve this just because the proposed design is preferred or desired by the applicant, it is not the minimum relief necessary to alleviate the hardship.

Dan O'Connell, resident of 7 Mockingbird Lane. Speaking on behalf of Dawn Harris, resident of 3 Cardinal Lane. He makes multiple points attesting to the fact the Mr. Royer's request is not the minimum relief necessary. He states that after the April meeting, Mr. Royer agreed to provide an alternative layout with the pumphouse in the rear, but has not done so and conveniently not mentioned it tonight. He references an alternative pump system referenced in a prior email from Mr. Ortiz that do not need to be housed in a pumphouse. He states that Mr. Royer waited until today to provide the engineer's report, exploiting the 4-month continuance granted by the PDB board and circumvented the review process. He questions whether then engineer considered alternative locations for the pumphouse, alternative equipment configurations, or alternate enclosure materials, or if he simply just rubber stamped Mr. Royers wants. He states that this Board has asked for specific information on the heat load when the question of height was brought up, and that no specific information has been provided and no heat load calculations were performed. He states that the engineer does not state that this is the minimum size enclosure that could work for this project.

Jackie O'Connell, resident of 8 Mockingbird Lane. Speaking on behalf of the Hoyt family and Ms. Nancye Walls. She states that all residents abutting the subject property on Mockingbird Lane are opposed to the variance request. She states that Mr. Royer just stated on the record that the

manufacturer does not require the pumps/equipment to be enclosed. She states that it took 1 month for the Board to approve variances for the pool and pool deck, but the fact that we are here 19 months later still speaking about the pump house, proves that it is not a reasonable request nor a hardship request. She states that these being specialty pumps are a want, and that wants do not qualify for minimum variance relief. She states that this request is an unsightly feature for their neighborhood that would change the character/environment. She states Mr. Royer is requesting a pool house almost as large as the pool itself. She states while the engineers' report is a very nicely written report, it provides absolutely nothing in the way of substantial evidence. She states that it just echoes Mr. Royers wants. She states that the letter acknowledges that this is "not conventional residential pool equipment" and therefore there is no hardship, as this is over and above what would normally be required or expected in a neighborhood.

Mr. Royer on rebuttal. He shows images of other properties in the neighborhood or in adjacent neighborhoods that show accessory structures with heights exceeding 4' in height. He states that the manufacturer does not state the equipment needs to be enclosed, but it also doesn't say it shouldn't be enclosed. He states when you buy a BMW car, the manufacturer does not tell you how to house it or maintain it, that its owner preference.

Mr. Long asks staff what the fence height requirement along the rear property line is. Ms. Kenny states it is six feet. Mr. Long questions if that 6' is allowed all the way along the rear, even up to the property line that is technically a street side property line. Ms. Kenny states yes.

Mr. Langello asks staff to pull up the photos submitted by a member of the public of other pump houses. Ms. Kenny projects this onto the screen. Mr. Langello states they have heard a lot from the neighborhood, and had this exact application been proposed on the west side of the county where there is more room, perhaps it would be more favorable. Mr. Langello states that because the smaller nature of the property, you do have to consider the nature of the neighborhood. Mr. Langello refers back to his earlier recommendations to build along the current building and that that option was not exhausted at all. He asks how many times you continue to chip at a hole.

Mr. Wilcox states that it is not within the purview of the Board to design the project. Mr. Boyd states that while the pumphouse alternative shown are adequate, they're not attractive. He states that the pumphouse he is proposing is attractive and doesn't see how the neighbors could be adversely affected by the proposed pumphouse. Mr. Boyd states in reference to the engineer report that you could go through and pick out certain statements to prove your point, but in his review of the report he sees that the engineer states the height is reasonable and appropriate for the function. He states while there are some neighbors that are opposed to this, he doesn't understand how it can adversely affect anyone.

Mr. Langello states that there was no question of the attractiveness of the building, but of how tall and close to the street it was. He states that we've given a lot of variances and were at the point of trying to meet the minimum relief requirement. He asks if they are to just keep granting everything the applicant wants despite how it might affect those in the neighborhood.

Mr. Conner states that he is stuck because he hasn't heard anything new tonight. He states that we have conflicting review by our own staff regarding the engineers report. He states the engineer letter is not rising to the level of substantial competence evidence that would change the dynamics of what they've heard in the past. He states that the information they received from the contractors representative is that the pumps need to be level with the pool, and that the pool is underground. He states that putting the pumps four feet in the ground to accommodate a higher working space for Mr. Royer is not at all unreasonable. He states he agrees with Mr. Wilcox that we should not be

designing the project but suggests there are alternatives that will meet the already approved variance criteria.

Mr. Wilcox, in his professional opinion as an engineer, does not see the visibility triangle or vision clearance to be an issue on this specific project. He states whether we like or don't like what the engineer report said, he stated he said it was reasonable and we should take that for what it is.

Mr. Lombardo echoes some of the points made by other Board members. He states that none of the alternative pumphouses shown are as aesthetically pleasing as the proposed rendering from the applicant.

Mr. Long states that Mr. Royer does have his minimum relief, and could move forward with his project today. He states the Board did not decide on the 4' height on a whim, that it was a condition to meet the height of the fencing and to be aesthetic to the neighborhood. Mr. Long states that he personally believes this continuous request by the applicant is for added privacy along the front property line where a higher fence is not allowed. He states that "reasonable and appropriate" doesn't mean required, stating that is what the Board is looking for.. is this required as we're trying to give him the minimum relief necessary to alleviate his hardship. He states if the structure really has to be this high, why not at least humor the Board as move it to the back of the property. He asks staff if the request before them today increases the footprint size from the original variance, and if so he would be willing to go to that increased footprint, still with the 4' height restriction.

Mr. Conner states that when this item was continued so that the could propose a new design with the structure at the rear of the property. Mr. Long and Mr. Lombardo echo this was the case. Mr. Conner asks Mr. Royer to come back up and explain why he didn't do that.

Mr. Royer states that it was mentioned before, and that it can not be at the back of the house. Mr. Conner asks him why the building can't be placed in the corner at the rear of the property next to his house. Mr. Royer states that that portion of the building is plywood. He states it is his understanding that if he moves the structure to the rear of the property, it has to meet the 10' rear setback when his house is 6' from the rear property line. He also mentions that he was told if his house was ever destroyed, 50% or more in value, that the house would have to move to that 10' rear setback. Mr. Conner asks if the Board would be willing to give him that variance, would he consider moving the building to the rear. Mr. Royer states that the problem is that he would have to change all the power in his house because the power and water are already on that side of the house. Mr. Conner asks if that is a no or if he is willing to put it in the back. Mr. Royer states he'd like to put it in the back, but right now, feasible wise, it would not be aesthetic or look appropriate.

Mr. Wilcox asks staff to confirm that if Mr. Royer relocates the structure to the rear of the property, it would be another application and hearing. Ms. Spector states that if the applicant and board agree to it, it would not have to come back as a new application.

Mr. Long asks staff to confirm if the building footprint on the original variance granted is the 12'8" by 7'6" size. Ms. Kenny states the footprint in the original application was slightly smaller and while she doesn't recall the exact dimensions, with this application the Board would be increasing the lot coverage by 1.2%.

Mr. Langello states that twice he heard the mention of property values and that a variance is not here to increase a property value. He states he personally believes that placing the pumphouse at the rear of the property would not decrease his property value. Mr. Lombardo states he is not opposed to the structure being on the back of the property.

Mr. Langello states that his concern is not about the aesthetics looking bad because it's an ugly looking building, but rather that right on the corner of the property and that it changes the character of the neighborhood. He states would create that look of tight lots where each house is crammed in there like the 40' and 50' wide lots you see today. He states that this is not the minimum relief necessary and that other options don't seem to be considered, it's either this way or the highway.

Mr. Lombardo asks if we can make a recommendation that the Board would be willing to approve it if the structure was pushed to the rear of the property. Mr. Langello asks for Ms. Spector, based on what is being proposed, if this can be continued one more time to a date certain with a new proposal that shows this design in a new location. Ms. Spector states if they can fully address all of the issues in a motion, it does not need to come back. Mr. Conner reminds the board that they have a motion on the floor that needs to be disposed of. He states that he believes what Ms. Spector means was if the Board can get consensus amongst themselves and Mr. Royer, and that there is no good sense in continuing the item for another expected site plan change if the applicant is not willing to engage in that.

Mr. Long states that he's not at the point of considering moving it to the rear. He states he believes they would be right back here in four months looking at the same exact plan because that's been the history. He states that he doesn't believe this is the first time the Board has hoped to see the plan presented differently, rather the last time they hoped to see it differently, it came back with a bigger footprint and pretty pictures. He states the Board has tried twice to see if there can be adjustment on this but that there is no desire on the other end to do that. Mr. Conner states that unfortunately he shares Mr. Longs pessimism.

Ms. Kenny states that for clarification to the Board, the code states that they can continue an item only once and that they have done that already. Mr. Langello restates that the option to continue is not there, that he either needs an approval or denial and can reapply in six months. Mr. Lombardo questions the potential end in a tie being a denial. Ms. Kenny states there isn't a timing period on a reapplication, and clarifies that the six month language is for a rezoning. As for the split vote, Ms. Kenny states we need a decision tonight or we're not going home, that you will either have to convince or sway your other Board members or come to some compromise, whatever that may be.

Mr. Lombardo states as much as he believes the applicant has expressed his desire not to put the structure at the rear of the property; it is possibly a suggestion from the Board to reconsider that and bring it back that way. That a redesign was an expectation the Board had from past applications.

Ms. Spector asks to make a recommendation to the Board, that if that is the direction the Board is leaning that they go forward with the motion for denial especially because there is not a reapplication period. Mr. Long clarifies that there is a motion for approval on the floor right now. Ms. Spector apologizes and clarifies she meant a remotion for denial. Mr. Long states if this is denied, he can re-do his plan and bring it back to them again. Mr. Conner clarifies that they would have to not approve the motion on the floor and then do another motion for denial. Ms. Spector confirms.

Mr. Lombardo asks Mr. Royer as much as he may not want to do it, to give him the space and the height, would he highly consider moving the structure to the rear of the property. Mr. Royer questions the setback of his existing structure and if he would need the structure to meet the 10' rear setback. He states if there were seven members present tonight that this would be approved and he doesn't get why the no-ers won't budge. He states he would rather they give him two ties again and then he will take it to the County and litigate it. He states he has always come in here in good faith and to honor him as the applicant.

Mr. Wilcox asks staff to confirm that he does meet the front setback off Pelican Lane. Ms. Kenny confirms. Mr. Wilcox clarifies that the front is not a concern, rather the concern is the west side. Ms. Kenny confirms and states also the lot coverage. Mr. Long states that it's not about the setback in the front or the side, that the height was made to match the fence.

MOTION: The Planning and Development Board finds that all the variance criteria as listed in the guidelines at Land Development Code Section 3.07.01.E have been met and therefore approves Project No. 2025080063 for a 22.34 left (West) street side setback variance from the minimum required 25-foot street side setback and 1.2 percent lot coverage variance from the maximum allowed 35 percent lot coverage for a pump house at 3 Pelican Lane (Parcel No. 23-11-31-5300-00000-0130).

Motion to approve by: Michael Boyd
Seconded by: Dan Wilcox
Anthony Lombardo – Yay
Dan Wilcox – Yay
Ron Long – Nay
Timothy Conner – Nay
Michael Boyd – Yay
Mark Langello (Chair) – Nay
Motion tied 3-3. (Long, Conner, and Langello opposed)

Mr. Wilcox states he is opposed to the statement that he has not given enough evidence, and states that he has given evidence over and over and over again. He states that Mr. Royer has shown that he is willing to put in a substantial structure that has aesthetic value for the neighborhood. Mr. Long states that in that scenario we'd be saying because it's pretty he can do it. He questions if that is the substantial evidence that the building has to be eight feet tall, because it looks pretty. Mr. Wilcox counters that the neighbors are arguing they don't want it because it is ugly. Mr. Long states that that point is not a part of his decision either way, that they landed on the four foot height limitation because of the max fence height allowed in the front yard.

Mr. Lombardo states that in his opinion he believes the space is needed to work on the equipment. Mr. Long states then he would go back to his question of why the building has to be sitting right in this exact spot of the property. Mr. Wilcox states that he has already shared with us that his electrical and plumbing requires the structure to be in that location. Mr. Long states that we are all aware you can take electrical anywhere you want. He states that is personal preference. Mr. Langello states if this was the only place he could do this and that he needed to do this, he doesn't believe there would be any negative votes on the Board, but what they're up against was did he ask for the minimum amount needed to get what he needed. He states that instead he came back with a bigger plan, and that Mr. Royer is not going for the minimum here, but going for whatever the desire was.

Mr. Conner states that he does not disagree with what Mr. Wilcox and Mr. Boyd are saying. That if you own a piece of land you ought to be able to do what you want with it. He states that the difference is while they live out in the woods on acreage, this gentleman has bought a postage stamp lot so he can be close to the beach and that you just can't do everything you want to do on that size lot.

Mr. Wilcox states the he is before us today because his lot is undersized for the district platted in 1949. Mr. Langello states but he knew this, buyer beware.

MOTION: The Planning and Development Board finds that all the variance criteria as listed in the guidelines at Land Development Code Section 3.07.01.E have not been met, that the requested variance is not the minimum relief necessary to alleviate the hardship, and therefore denies Project No. 2025080063 for a 22.34 left (West) street side setback variance from the minimum required 25-foot street side setback and 1.2 percent lot coverage variance from the maximum allowed 35 percent lot coverage for a pump house at 3 Pelican Lane (Parcel No. 23-11-31-5300-00000-0130).

Motion to deny by: Ron Long
Seconded by: Timothy Conner
Anthony Lombardo – Nay
Dan Wilcox – Nay
Timothy Conner – Ay
Michael Boyd – Nay
Ron Long - Ay
Mark Langello (Chair) – Ay
Motion tied 3-3. (Lombardo, Wilcox, Boyd opposed).

MOTION: The Planning and Development Board finds that all the variance criteria as listed in the guidelines at Land Development Code Section 3.07.01.E have not been met, that the requested variance is not the minimum relief necessary to alleviate the hardship, and therefore denies Project No. 2025080063 for a 22.34 left (West) street side setback variance from the minimum required 25-foot street side setback and 1.2 percent lot coverage variance from the maximum allowed 35 percent lot coverage for a pump house at 3 Pelican Lane (Parcel No. 23-11-31-5300-00000-0130).

Motion to deny by: Ron Long
Seconded by: Timothy Conner
Anthony Lombardo – Yay
Dan Wilcox – Nay
Timothy Conner – Yay
Michael Boyd – Nay
Ron Long - Yay
Mark Langello (Chair) – Yay
Motion carried 4-2 (Wilcox and Boyd opposed)

6. Quasi-judicial requiring disclosure of ex parte communication:
Project 2026060040 – **REQUEST FOR VARIANCE IN THE R-1 (RURAL RESIDENTIAL) DISTRICT** – Request for a Variance in the R-1 (Rural Residential) District from the Minimum Required Front Setback at 2 Valencia Street. Parcel Number: 38-11-31-0950-00000-0330; Parcel Size: 26,140+/- Square Feet (0.60+/- Acres). Owner/Applicant: Michael and Nancy Morea. (AR 6617) *(TRC,PDB)*

Board Comments: Mr. Wilcox has recused himself from the vote. Mr. Conner states he knows the applicants but has not discussed this application with them. Mr. Langello states he knows the applicants, and would consider them friends, but it has nothing to do with how he would vote.

Staff Presentation: Hannah Lademann, Senior Planner.

Applicant Presentation: Michael and Nancy Morea.

FLAGLER COUNTY PROPERTY APPRAISER



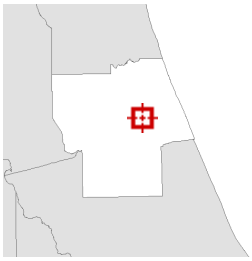

Legend

- Parcels
- Roads
- Streams and Rivers

Date created: 12/23/2024
Last Data Uploaded: 12/23/2024 7:24:50 AM

Developed by SCHNEIDER GEOSPATIAL

Growth Management Department
Planning & Development
1769 E. Moody Blvd, Bldg. 2
Bunnell, FL 32110

Flaglercounty.gov
Phone: (386)313-4009
Fax: (386)313-4109

September 15, 2026

«OwnerName» «OwnerAddress1»
«OwnerAddress2»
«OwnerCityStZip»

RE: Project No. 2025080063/AR No. 3743 – Appeal of Planning and Development Board Decision for a Variance in the R/C (Residential Limited Commercial) District (Order No. 5921-A).

Dear Property Owner,

As owner of property within 300' of the property referenced herein, the Flagler County Planning Department, in accordance with Section 2.07.00 of the Flagler County Land Development Code, advises you that:

> A request has been made by Owner Raymond R. Royer Jr., located at 3 Pelican Lane, identified as Parcel Number 23-11-5200-00000-0130, for an Appeal of a Planning and Development Board Decision for a Variance in the R/C (Residential Limited Commercial) District (Planning and Development Board Order No. 5921-A, signed August 19, 2026 and recorded in Official Records Book 3080, Page(s) 925 to 925, of the Public Records of Flagler County, Florida).

You are hereby notified that a public hearing before the **Flagler County Board of Commissioners**, required by law, will be held in the Flagler County Government Services Building, Board Chambers, at 1769 East Moody Boulevard, Building 2, Bunnell Florida, on **October 5, 2026**, beginning at **9:30 a.m.** or as soon thereafter as possible. You are welcome to attend and express your opinion.

Sincerely,

Simone Kenny

Simone Kenny
Senior Planner

NOTE: PURSUANT TO SECTION 286.0105. FLORIDA STATUTES, IF A PERSON DECIDED TO APPEAL ANY DECISION BY THE BOARD, AGENCY OR COMMISSION WITHRESPECT TO ANY MATTER CONSIDERED AT SUCH MEETING OR HEARING, HE OR SHE WILL NEED A RECORD OF THE PROCEEDINGS AND THAT, FOR SUCH PURPOSE, HE OR SHEWILL NEED TO ENSURE THAT A VERBATUM RECORD OF THE PROCEEDINGS IS MADE, WHICH RECORD INCLUDES THE TESTAMONY AND EVIDENCE UPON WHICH THE APPEAL IS BASED.

Andy Dance	Greg Hansen	Kim Carney	Leann Pennington	Pam Richardson
District 1	District 2	District 3	District 4	District 5

AR No. 6743

ParcelId	OwnerName	OwnerAddress1	OwnerAddress2	OwnerAddress3	OwnerCityStZip	Country
23-11-31-1700-00000-0090	HOGAN JAMES A &	DEBORAH A H&W	12 DRIFTWAY TERRACE		FLAGLER BEACH, FL 32136	
23-11-31-4790-00000-0290	ROANE DONALD T &	DONNA W H&W	1000 EAGLE POINT DR		ST AUGUSTINE, FL 32092	
23-11-31-5300-00000-0210	BRUNK ANDRUE E	& MAUREEN O H&W LIFE ESTATE	5 CARDINAL LANE		FLAGLER BEACH, FL 32136	
23-11-31-5300-00000-0180	HARRIS RENE DAWN & JEFFREY D	RIZK	3 CARDINAL LANE		FLAGLER BEACH, FL 32136	
23-11-31-1700-00000-0110	STEINBRING ANNE L & DAVID B BUSCH H&W		8 DRIFTWAY TERRACE		FLAGLER BEACH, FL 32136	
23-11-31-5300-00000-0060	HARE ROBERT & NATALIE	DIEDERICH H&W	12 PELICAN LN		FLAGLER BEACH, FL 32136	
23-11-31-5300-00000-0110	ELLSBURY CHARLES E & LINDA M	H&W	9 PELICAN LANE		FLAGLER BEACH, FL 32136	
23-11-31-5300-00000-0170	OCONNELL DANIEL E & JACQUELINE	A OCONNELL H&W	3617 REDFIELD DRIVE		GREENSBORO, NC 27410	
23-11-31-1700-00000-0020	LUKUCH EDWARD &	GRAZYNA	1239 OCEAN SHORE BLVD #9F		ORMOND BEACH, FL 32176	
23-11-31-1700-00000-0120	BENOIT GEORGE E JR LIFE ESTATE		17 PELICAN LANE		FLAGLER BEACH, FL 32136	
23-11-31-5300-00000-0120	WALLS NANCYE WINDSOR		89 WESTFIELD LANE		PALM COAST, FL 32164	
23-11-31-1700-00000-0130	FRASER DEREK GUY TRUSTEE &	JANET FRASER HINMAN TRUSTEE	1800 OLD MOODY BLVD		BUNNELL, FL 32110	
23-11-31-5300-00000-0050	GORDO INVESTMENTS MANAGEMENT LLC		4070 N CHINOOK LN		ORMOND BEACH, FL 32174	
23-11-31-1700-00000-0010	HINMAN JANET F TRUSTEE		7 DRIFTWAY TERRACE		FLAGLER BEACH, FL 32136	
23-11-31-5300-00000-0230	OCONNELL JACQUELINE & DANIEL E	OCONNELL W&H	3617 REDFIELD DRIVE		GREENSBORO, NC 27410	
23-11-31-5300-00000-0040	MCAULIFFE HEATHER	& KINDRA MCCULLOUGH JTWROS	8 PELICAN LANE		FLAGLER BEACH, FL 32136	
23-11-31-5300-00000-0160	HOYT DAVID HOUSTON	LIFE ESTATE	3880 MARTIN STREET		ORLANDO, FL 32806	
23-11-31-5300-00000-0130	ROYER RAYMOND R JR & JANICE L	PAXSON	3 PELICAN LANE		FLAGLER BEACH, FL 32136	
23-11-31-1700-00000-0140	FRASER DEREK G TRUSTEE		1800 OLD MOODY BLVD		BUNNELL, FL 32110	
23-11-31-5300-00000-0030	MCKAIG DAVID P TRUSTEE		321 N 11TH ST		FLAGLER BEACH, FL 32136	
23-11-31-4790-00000-0300	WILLIAMS RACHEL V TRUSTEE		16529 NW 193RD TERRACE		HIGH SPRINGS, FL 32643	
23-11-31-5300-00000-0240	TASLIDZIE ESAD		5922 CORAL LAKE DRIVE		POLMANO BEACH, FL 33063	
23-11-31-5300-00000-0150	ANESGART HOWARD S & ALICE E	ANESGART H&W	3126 N OCEANSHORE BLVD		FLAGLER BEACH, FL 32136	
23-11-31-5300-00000-0020	CASTILLO MANUEL & CARIDAD H&W		3110 N OCEAN SHORE BLVD		FLAGLER BEACH, FL 32136	
23-11-31-5300-00000-0140	SCUDDER ROBERT KIRK	& GINA MARIE CASTELLO JTWROS	1717 SE 11TH STREET		OCALA, FL 34471	
23-11-31-4790-00000-0310	SCHWEITZ FREDRICK O		400 SW 48TH STREET RD		OCALA, FL 34474	
23-11-31-5300-00000-0010	JANECZEK THOMAS		3110 N OCEAN SHORE BLVD		FLAGLER BEACH, FL 32136	
23-11-31-1700-00010-00B0	HICKS JOHN	& BRITTANY H&W	1001 TEMPLE GROVE PLACE		WINTER GARDEN, FL 34787	
23-11-31-1700-00010-00C0	POKORSKY THOMAS M & MICHELE M	POLORSKY H&W	3131 N OCEAN SHORE BLVD		FLAGLER BEACH, FL 32136	
23-11-31-0000-02110-0000	THREE SISTERS INVESTMENTS LLC		3206 SANDY RIDGE DR		CLEARWATER, FL 33761	
23-11-31-0000-02100-0000	SHIKANY CHARLES P & KRISTIN	H&W	728 W JACKSON BLVD		CHICAGO, IL 60661	
23-11-31-0000-02090-0000	3109 N A1A LLC		1800 OLD MOODY BLVD		BUNNELL, FL 32110	
23-11-31-0000-02080-0000	3109 N A1A LLC		1800 OLD MOODY BLVD		BUNNELL, FL 32136	
23-11-31-2925-00000-0010	MOLLIS KRISTI LYNN		3105 N OCEAN SHORE BLVD		FLAGLER BEACH, FL 32136	

I hereby affirm mailed notice to each owner on 9/15/2026 for the Board of County Commissioners meeting on 10/05/2026 at 9:30 am.

_____

Simone Kenny, Principal Planner


APPLICATION # 6743
NOTICE OF
PUBLIC HEARING
THE FLAGLER COUNTY BOARD OF COUNTY COMMISSIONERS WILL HOLD A PUBLIC HEARING AT:
FLAGLER COUNTY GOVERNMENT SERVICES BUILDING BOARD CHAMBERS
1769 E. MOODY BOULEVARD, BLDG 2; BUNNELL, FL 32110
OCTOBER 5, 2026 @ 9:30 AM
REQUEST: APPEAL OF PDR DECISION
APPLICANT: RAYMOND ROWER
Parcel Number: 23-11-5200-00000-0130
Zoning District: RIC
THE PUBLIC HEARING IS BEING HELD FOR THE PURPOSE OF HEARING ANY AND ALL INTERESTED PARTIES AND PERSONS WHO MAY BE FOR OR AGAINST THE APPLICATION, RELATIVE TO THE PROPERTY WHEREON THIS NOTICE IS POSTED.
DO NOT REMOVE THIS NOTICE PRIOR TO THE PUBLIC HEARING DATE ABOVE

From: [REDACTED]
To: Planning Dept; Rose Keirnan
Subject: Ray Royer 10/5/26 Meeting
Date: Tuesday, September 29, 2026 8:25:08 PM
Attachments: Flagler County Commissioners.docx

Please find attached my letter to the Flagler County Commissioners concerning Ray Royer at 3 Pelican Ln, Flagler Beach, FL 32136.

Thank you for taking the time to review my concerns.
Dawn Harris
[REDACTED]
Flagler Beach, FL 32136

To Flagler County Commissioners,

The **Planning Board decision should be upheld for 3 Pelican Lane** appeal.

I have followed this variance request for months and submitted comments to oppose. The Planning Board has:

· Heard lots of evidence that a 4 feet pump enclosure is sufficient;

· Been patient with all of Ray Royer's presentations, changes, and delays;

· I believe The Planning Board has followed the pertinent laws and processes.

It is time to put closure to Ray's increasing demands for a taller pump house. He **doesn't need** a taller pump house – he ***wants*** a pool house. There is no need for any structure which exceeds the 4 ft. fence height, let alone 12'x8' in size. My neighbor at 6 Pelican Ln recently built a pool. No large pool house or variances were needed for pool, pumps or filters.

Ray told me that he will get approval this time, and he will build to 12 feet. That is why keeping the height condition is important. I don't want to see tall concrete walls for an unnecessary pump/storage/pool house. I want Ray to enjoy his pool, but he could have had one already if he didn't keep increasing the height.

Most of the homes in this neighborhood were built by my great uncle Charles "Red" Bourland, who was also the mayor of Flagler Beach back in the 80's. I grew up here and I came back to live in my family home because of its appeal. The integrity and character of our neighborhood must be maintained.

I hope that Ray enjoys his pool within the variances already in place. Unbelievably, he received permission to build all the way to his property line. Removal of a height limit would cause permanent, detrimental change to our neighborhood. **We don't want to see a building on the corner of our streets.**

The Commission should respect and uphold the Planning Board's decision.

I have asked Dan O'Connell to speak further on my behalf.

Dawn Harris

[REDACTED]

From: [REDACTED]
To: Planning Dept; Rose Keirnan
Subject: Variance Appeal - 3 Pelican/Royer
Date: Thursday, October 1, 2026 11:20:20 AM

Dear Commissioners,

Last January, when you considered Mr. Royer's appeal, you asked some very important questions. The Public wasn't given the opportunity to respond. It is appropriate to review those questions and answers prior to next Monday's meeting.

Can the pump house be moved to the rear of the property? Yes

Mr. Royer has several options. If he wants a tall pump house, it could be placed at the rear of the property, in line with the back of the existing home. It could be attached to his home or not. A 4' -8' pump house, with smaller footprint, could be placed along the west wall of his house.

At the April Planning Board (PDB) meeting, Royer received a continuance (to August) after **agreeing** to return with a plan to **move the pump house to the rear of his property.**

In August, Royer returned to the Planning Board with no changes to his plan and multiple excuses why he would not move the pump house.

Are these renderings drawn to scale? No

Mr. Royer has testified these are computer-generated renderings and are not to scale. In fact, the renderings of 3 Pelican property and bordering streets are almost unrecognizable from real-life (see photos on pg 1331 of your materials.) The "wooded area" behind the Royer house is substantially cleared.

On the renderings of the pump house, the offset of the roof lines on both structures is misleading and Royer has already changed to a metal roof on the pump house. The offset between roof lines would be even more apparent when roofing materials don't match.

Do the renderings accurately show how close to Mockingbird Lane the pump house will be? No

The amount of green space between the proposed pump house and Mockingbird Lane is greatly exaggerated. The oversized pump house, approximately 30 inches from the property line, will be very close to Mockingbird Lane. The grass slope down to Mockingbird Lane will be covered by a flat, impervious pool deck.

How can the pool filter be cleaned if the height restriction remains?

At the August PDB meeting, testimony revealed that (Royer's contractor) Ortiz Pool Builders promotes an all-weather pool filter that only requires an 18-inch vertical clearance on its website. The filter is made to be outside in the elements. Given its clearance requirements, the filter could easily be placed in a 4-foot-tall pump house. Also, there are many horizontal pool filters which Mr. Royer could incorporate into his project. Any of these options can eliminate the height concerns tied to the pool filter.

How was the 4 feet height condition determined? LDC

The Land Development Code requires a maximum height of 4 feet for a structure acting as a wall or fence in the front yard. In addition, the neighborhood covenants limit fence heights to 4 feet to optimize sightlines and appearances.

Can the equipment fit into a 4 foot high structure? Yes

The equipment can easily fit into a 4-foot-tall structure and be adequately ventilated. PDB members state that fresh air or fans can allow adequate airflow for pumps and heaters. Another option is the use of commercially-available lift hinges which would allow access from the top as well as sides for easy maintenance.

The Planning Board recognized the initial variance requests were extraordinary in the amount of setback relief which Royer was requesting. The PDB was within its rights to add a height condition when granting the numerous variances. In a nod to the Code and neighborhood concerns, they added the height condition. Since then, Mr. Royer has been unwilling to work with the Planning Board to reach a mutually satisfactory outcome.

Variances, when granted, must be the *Minimum Relief Necessary* to alleviate a hardship. Mr. Royer's plans or equipment choices can be modified in numerous ways to work within the previously granted variances. He has workable options to protect pool equipment if he chooses.

I hope you will continue to ask the important questions and request information and input from the staff pertaining to this variance appeal.

Thank you,

Dan O'Connell

Mockingbird Lane